This is a reproduction of a library book that was digitized by Google as part of an ongoing effort to preserve the information in books and make it universally accessible.

Google™ books

https://books.google.com

601640681W

Digitized by Google

MILITARY BOOKS.

Published by Authority.

LONDON:
PRINTED FOR HER MAJESTY'S STATIONERY OFFICE.

SOLD BY
EYRE AND SPOTTISWOODE, EAST HARDING STREET, LONDON, E.C.
JOHN MENZIES & Co., 12, HANOVER STREET, EDINBURGH; AND 90, WEST NILE STREET, GLASGOW.
HODGES, FIGGIS, & Co., LIMITED, 104, GRAFTON STREET, DUBLIN.

ARMY REGULATIONS:—

PAY, APPOINTMENT, PROMOTION, AND NON-EFFECTIVE PAY OF THE ARMY. Royal Warrant for. 1892. Price 1*s.* 6*d.*

ALLOWANCES OF THE ARMY. Regulations for the. 1892. Price 1*s.* 6*d.*

QUEEN'S REGULATIONS AND ORDERS FOR THE ARMY. 1892. Price 2*s.*

EQUIPMENT OF HER MAJESTY'S ARMY. Regulations for. 1890:—
Part 1. Peace. 8vo. 192 pp. Cloth. Price 1*s.* 6*d.*
Part 2. Peace. Details. Section I. Infantry. Price 2*d.* Section II. Cavalry. Price 3*d.* Section III. Army Service Corps. Price 2*d.* Section IV. Ordnance Store Corps. Price 1*d.* Section V. Medical Staff Corps. Price 1*d.* Section VI. Royal Military Academy; Section VII. Royal Military and Staff Colleges; Section VIII. General Staff, Schools of Instruction, and Staff Clerks; Section IX. Military Prisons. Price 1*d.* Section X. Royal Engineers. Price 6*d.* Section XI. Field Artillery. Price 6*d.* Section XII. Garrison Artillery. Price 3*s.*

DRESS REGULATIONS FOR OFFICERS OF THE ARMY (INCLUDING THE MILITIA). 1891. 8vo. Cloth. Price 1*s.* 6*d.*

VETERINARY DEPARTMENT, HER MAJESTY'S ARMY: Regulations for. 1882. Price 1*s.* 3*d.*

ENCAMPMENTS: Regulations and Instructions for. 1889. Price 9*d.*

ARMY SERVICE CORPS:—

DRILL AND EXERCISES FOR THE. Price 2*s.*

DUTIES. Regulations for. 1889. Price 1*s.* 6*d.*

FIELD SERVICE. Manual for. 1889. Price 2*s.*

REGIMENTAL STANDING ORDERS. 1890. Price 1*s.* 6*d.*

SUPPLY HANDBOOK FOR. Price 3*s.*

ARMY ORDERS. General Orders, Regulations, and Instructions promulgated to the Army. Monthly. Price 3*d.*

COVERS FOR ARMY ORDERS. Price 9*d.* each.

CAVALRY DRILL. 1891. Vol. I. (Provisional) and Vol II. and Vol. III. Price 1*s.* each.

CAVALRY, YEOMANRY. Regulations for the. 1889. Price, 1*s.* 6*d.*

(Wt. 20,662 2250 1 | 93—H & S 7344)

23185. D (1) 165 (2)
Digitized by Google

MILITARY BOOKS, published by Authority—continued.

AMMUNITION. Treatise on. 1892. 5th Edition. Price 6*s.*

CAVALRY DIVISION. THE. Troop Leading. Studies in. Price 5*s.*

FIELD ARTILLERY DRILL, 1889. Three vols. Price 1*s.* each.

GARRISON ARTILLERY DRILL. Vol. I. (*In the press.*) Vol. II. (Parts 1 to 5.) 1891. Price 1*s.* 6*d.*

SIEGE ARTILLERY DRILL. 1891. Price 2*s.* 6*d.*

ARTILLERY FIELD SERVICE: Handbook for. Vol. I. Field Artillery. 1884. Price 5*s.*

ARTILLERY. FIELD. Tactics of. 8vo. Cloth. Price 2*s.* 6*d.*

ARTILLERY. MUSEUM OF. In the Rotunda, Woolwich. Catalogue of. 1889. Price 1*s.* 9*d.*

ARTILLERY KIT PLATES. Nos. 1 to 10. Price 2*d.* each.

ARTILLERY AND RIFLE RANGES ACT, 1885. Byelaws made by Her Majesty's Principal Secretary of State for the War Department, with the consent of the Board of Trade. 8vo. Price 1*d.* each.

Ash Rifle Ranges, Aldershot Camp. Landguard: Foreshore and Sea at. Lydd Ranges. Middlewick Rifle Ranges. Millbrook Rifle Ranges. Scraps Gate Rifle Ranges. Shoeburyness Ranges. Warden Point Battery and Hurst Castle Artillery Practice Range. Wash: Foreshores of the.

ENGINEERING, FIELD, ELEMENTARY: Manual of. Compiled at the School of Military Engineering, Chatham. By Authority. 12mo. 176 pp. 79 plates. Basil. 1889. Price 1*s.* 6*d.*

ENGINEERING. MILITARY. Manual of. (*In the press.*)

ENGINEER KIT PLATE. Mounted Men. Dismounted Men. Price 1*d.* each.

EXPLOSIVES. Notes on. 1891. Price 6*d.*

FIELD ARMY ESTABLISHMENTS. Home Defence and Service Abroad. Price 2*s.* each.

FORTIFICATION AND MILITARY ENGINEERING. Text Book of. Part I. (1892). Price 5*s.*

INFANTRY. DRUM AND FLUTE DUTY for the Infantry Branch of the Army, with Instructions for the Training of Drummers and Flautists. From the authorised Sergeant Drummers' Manual. Horse Guards, War Office, 1st October, 1887. Price 2*s.*

INFANTRY DRILL. 1892. As revised by Her Majesty's Com- mand. Price 1*s.*

INFANTRY, MOUNTED. Regulations and Field Service Manual for. Issued with A.O. 1st January, 1890. Price 1*s.* 6*d.*

LEE-METFORD RIFLE. Rifle Exercises, Manual Exercises and Bayonet Exercise. 1892. Price 3*d.*

MAGAZINE RIFLE:—

CARE OF ARMS AND AMMUNITION. Firing Exercise. Aiming Drill. (Issued with Army Orders, 1st February, 1891.) Price 2*d.*

Digitized by Google

MILITARY BOOKS, published by Authority—continued.

MARTINI-HENRY RIFLE AND CARBINE. Care of Arms and Ammunition. Firing Exercise. Aiming Drill. (Issued with Army Orders, 1st February, 1891.) Price 3*d.*

MEAT INSPECTION. A Guide to. For Regimental Officers. 1891. Price 1*s.* 6*d.*

MESSING OF THE SOLDIER. Memorandam on the. May, 1891. Price 1*d.*

MOBILIZATION FOR HOME DEFENCE (Regular Forces). Regulations for, 1892. Price 4*d.*

MUSKETRY INSTRUCTION. Regulations for. 1892:—

LEE-METFORD RIFLE. Price 1*s.*

Ditto, Alterations and Additions. 1892. Price 1*d.*

MARTINI-HENRY RIFLE. Price 1*s.*

Ditto, Alterations and Additions. 1892. Price 1*d.*

ORDNANCE STORE SERVICES. Regulations for. 1891. Price 2*s.*

PATHOLOGICAL SPECIMENS CONTAINED IN THE MUSEUM OF THE ARMY MEDICAL DEPARTMENT, NETLEY. Descriptive Catalogue of the. 8vo. pp. Price *(In the press.)*

RATIONS. Soldiers. Lectures on Provision and Inspection of. 1892. Price 2*d.*

VOLUNTEERS in Brigade and Regimental Camps, or when encamped with the Regular Forces. Orders and instructions for. Revised, 1892 Price 1*d.*

STEAM ENGINES AND BOILERS Notes on the Management of. 1891. Price 1*d.*

DERRICKS, SHEERS, and HOLDFASTS. 1890. Price 1*s.* 6*d.*

TRUMPET and BUGLE SOUNDS for all Branches of the Army. With Instructions for the Training of Trumpeters and Buglers. Price 2*s*

GUNNERY, Text Book of. By Major G. MACKINLAY, R.A. Containing Parts I. and II., and Gunnery Tables. 1887. 342 pp. Price 4*s.*

GUNNERY TABLES. Collected and compiled by Major G. MACKINLAY, R.A. for the Text Book of Gunnery, 1887. 48 pp. Price 2*s.* 6*d.*

GUNS, Handbooks for, viz.:—

6-PR. R.M.L. Converted, of 58 and 71 cwt. 1892. Price 1*s.*
40-PR. R.B.L. (1889.) Price 1*s.*
20-PR. ,, of 16 cwt., on Garrison Sliding Carriage and Travelling Carriage. 1892. Price 1*s.* 6*d.*
16-PR. R.M.L. of 12 cwt. (Land Service.) 1891. Price 1*s* 6*d.*
12-PR. B.L. (Mark I.) ,, 1891. Price 1*s.*
9-PR. R.M.L. of 6 cwt. and 8 cwt. ,, 1889. Price 1*s.*
6-PR. Hotchkiss Quick-Firing. ,, 1890. Price 1*s.* 6*d.*
12-inch B.L. of 47 tons. 1891. Price 1*s.* 6*d.*
11-inch R.M.L. of 25 tons. 1892. Price 1*s.*
10-inch B.L. 1892. Price 2*s.* 6*d.*
9·2-inch ,, 1892. Price 3*s.*
8-inch ,, Howitzer of 46 cwt. Mark I., on Bed and Siege Platform or Siege Travelling Carriage. (Land Service.) 1890. Price 1*s.* 6*d.*
7-inch R.B.L. of 72 cwt.; and 82 cwt., on Moncrieff and Sliding Carriage. 1892. Price 1*s.* 6*d.*
6-inch B.L. Marks IV., V., and VI. 1892. Price 2*s.* 6*d.*
4-inch ,, Jointed Howitzer. (Mark I.). Mule Equipment. (Land Service.) 1890. Price 1*s.* 6*d.*
4-inch ,, Marks V. and VI. (Land Service.) 1890. Price 2*s.*

Digitized by Google

[*All Rights Reserved.*]

DETAILS OF EQUIPMENT

OF

HER MAJESTY'S ARMY.

PART 2.—SECTION XII.

GARRISON ARTILLERY.

PEACE.

WAR OFFICE, 1892.

LONDON:
PRINTED FOR HER MAJESTY'S STATIONERY OFFICE,
BY HARRISON AND SONS, ST. MARTIN'S LANE,
PRINTERS IN ORDINARY TO HER MAJESTY.

And to be purchased, either directly or through any Bookseller, from
EYRE & SPOTTISWOODE, East Harding Street, Fleet Street, E.C.; or
JOHN MENZIES & Co., 12, Hanover Street, Edinburgh, and
90, West Nile Street, Glasgow; or
HODGES, FIGGIS, & Co., Limited, 104, Grafton Street, Dublin.

Price Three Shillings.

Digitized by Google

(Wt. 20662 2250 1 | 93—H & S 7344)

Digitized by Google

PART 2.

PEACE.

SECTION XII.—ARTILLERY SPECIAL INSTRUCTIONS AND DETAILS.

GARRISON ARTILLERY.

I.—SPECIAL INSTRUCTIONS.
II.—DETAILS OF EQUIPMENT.

38407
Equipt.
1400

I.—SPECIAL INSTRUCTIONS.

	PAGE
1. Duties of Officers	489
2. Duties of Officers of the Staff for the Inspection of Warlike Stores	490
3. Duties of Inspectors of Ordnance Machinery	491
4. Duties of Ordnance Artificers	494
5. General Supply of Equipment	496
6. Equipments for Armaments of Works and Garrison Artillery	499
7. Equipment of Siege Artillery, Batteries of Position, and Movable Armaments	507
8. Articles for Drill and Instruction of Royal Artillery	508
9. Practice Ammunition	508
10. Tools	516
11. Targets and Signalling Stores for Gun Practice and Instruction	520
12. Text Books, Handbooks, and Range Tables....	523
13. Marking of Ordnance, Carriages, and Artillery Stores	525
14. Repair and Preservation of Equipment, including Armaments of Works	529
15. Instructions for keeping Store Accounts of Royal Artillery Works and Positions, and of certain Establishments	537
16. Instructions for the Preservation, Inspection, and Fitting of Ordnance, Carriages, Turntables, Rope Mantlets, Lifting Jacks, &c.	540
Appendices	652

1.—DUTIES OF OFFICERS.

1. In order to ensure that the ordnance, carriages, slides, ammunition, and stores forming the armaments in Half-yearly inspection of armaments.

Digitized by Google

charge of the Artillery, are kept in a thorough state of efficiency, Officers Commanding Royal Artillery Districts will make an inspection of the same twice a year.

Report to be sent to G.O.C.

2. Special reports on Army Form G 1083, on the result of these inspections will be made, in duplicate, on the 1st January and 1st July in each year, to the General Officer Commanding, who will forward them, with his remarks thereon, to the Adjutant-General. These reports will deal solely with the efficiency of existing armaments and equipments; they should be thoroughly considered at the station, and such local action taken as may appear possible and desirable; they should also draw attention to matters brought to notice in former reports, which remain still unsettled. In the case of stores still due from Ordnance Store Department to complete armaments; a return on Army Form G 1085, showing the stores in detail, and giving full particulars concerning delay in issue, should also accompany the reports. A separate numbered paragraph will be allotted to each subject dealt with in the report. The local action taken should be briefly noted below the paragraph concerned.

Proposals for alterations in or new armaments.

2A. Any alteration proposed in existing works or armaments, or any proposals for new works or armaments should be submitted separately, after being fully considered at the station. They should be accompanied by a joint report of the Officer Commanding Royal Artillery and the Commanding Royal Engineer, and by such drawings and estimates as may be necessary for their consideration at the War Office.

Artillery District Store Accounts.

3. Officers Commanding Artillery Districts will cause accounts to be kept and rendered in accordance with the detailed instructions for keeping these accounts as given in paragraphs 220 to 240.

Headquarter Staff of R.A. Districts and R.A Staff Clerks.

4. The arms, accoutrements, tools, saddlery, and other equipment, for use of the Headquarters Staff of Royal Artillery Districts, including the tools and materials for the armourer serjeant, and the equipment of Royal Artillery staff clerks, will be demanded by the Officer Commanding the Royal Artillery District Establishments, who will account for them in an equipment ledger, which will be rendered to the Accountant-General in the same way as the equipment ledger of a Company.

Arms and accoutrements for district establishments, &c.

4A. The Warrant Officers, non-commissioned officers and men, composing the District Establishments and Detachments, Royal Artillery, at the following stations, will be supplied with arms and accoutrements by the companies, as stated against each :— A.O. 58. 1892

Digitized by Google

District Establishments	Jersey	By the companies of Garrison Artillery at the respective stations.
	St. Lucia	
	Jamaica	
	Mauritius	
Detachments	Barbados	By the company of Garrison Artillery at St. Lucia.
	Sierra Leone	By the Officer Commanding Sierra Leone Detachment at Devonport.

2.—OFFICERS OF THE STAFF FOR THE INSPECTION OF WARLIKE STORES.

Under whose orders serving.

5. Officers of the Staff for the Inspection of Warlike Stores are attached to the Ordnance Store Department and are under the orders of the Senior Ordnance Store Officer.

When services are required by O.C.R.A.

6. When the services of these officers are required by the Officer Commanding Royal Artillery to perform the duties laid down in paragraphs 7 and 8, that officer will forward a requisition to the Senior Ordnance Store Officer, who will arrange to comply with the request, provided departmental work will admit of it.

Conduct of Laboratory duties, &c.

7. They will conduct the laboratory duties of the station (detailed in Section IV, Regulations for Ordnance Store Services) as required from time to time, either for the Officer Commanding Royal Artillery or for the Ordnance Store Department, as the case may be.

To assist in inspections, &c.

8. At stations abroad they will assist the Officer Commanding Royal Artillery in his inspections of the standing armaments, and will also minutely inspect all shells, cartridges, tubes, fuzes, and other laboratory stores in the various magazines in Artillery charge; and their reports on these subjects will be addressed to the Officer Commanding Royal Artillery, who will forward them with his own report to the General Officer Commanding (*see* paragraph 2). They will also make all examinations of ordnance and gunpowder in accordance with the regulations; and where there is not an Inspector of Ordnance Machinery, they will, in addition to the above duties, carefully examine all carriages and slides.

Examination of Ordnance.

Articles in permanent charge.

9. The only articles which will remain in the permanent charge of these Officers are implements for use, and such few materials as may be necessary for Departmental purposes. The implements will be accounted for in the Articles in Use ledger of the Ordnance Store Department, and held on inventory by the Officer of the Staff for the Inspection of Warlike Stores.

Digitized by Google

3.—DUTIES OF INSPECTORS OF ORDNANCE MACHINERY.

Duties.

10. It will be the duty of the Inspector to satisfy himself by frequent examinations that all the ordnance, mountings, machinery, engines, and gear, on Artillery charge are at all times in thorough working order, and are being properly used, bringing any defects or irregularities to the notice of the officer in immediate charge. The examination of ordnance alluded to in paragraphs 275 to 362, will, however, still be carried out by Officers of the Staff for the Inspection of Warlike Stores, or officials from the Royal Gun Factory or Ordnance Store Department, as therein directed.

Stations abroad.

11. At stations abroad, with the permission of the Officer Commanding Royal Artillery, the Inspector of Ordnance Machinery will assist the Officers of the Staff for the Inspection of Warlike Stores in making the special examinations above mentioned.

Repairs to armaments, &c.

12. All repairs or adjustments to ordnance, mountings, machinery, or engines, belonging to the armament, will be executed under the personal superintendence of the Inspector of Ordnance Machinery, except—

(*a.*) In cases where special orders are given on the subject from the War Office ; and,

(*b.*) In the case of repairs to ordnance at home ordered in connection with the examinations referred to in paragraph 10.

Repairs at stations abroad.

13. In executing repairs or re-venting, at stations abroad, in pursuance of sentence passed by the Officer of the Staff for the Inspection of Warlike Stores on any gun, the Inspector of Ordnance Machinery will act under the directions of that officer, who will inspect the work when it is completed.

Reports of repairs.

14. The Inspector of Ordnance Machinery will report the completion of all repairs, &c., carried out under his direction, to the Officer Commanding Royal Artillery.

Assistance.

15. Upon receipt of instructions to carry out any of the services referred to in paragraph 12 the Inspector of Ordnance Machinery will apply to the Ordnance Store Department, through the Officer Commanding Royal Artillery, for such assistance as may be necessary beyond that at the immediate disposal of the Inspector.

Materials and tools.

16. Materials for repair will likewise be demanded by the Inspector of Ordnance Machinery from the Ordnance Store Department, through the Officer Commanding Royal

Digitized by Google

Artillery, as may be required. Materials, tools, and workshops in Artillery charge will be available for the Inspector in the performance of his duties.

Charge of artificers, &c.

17. All ordnance artificers, workmen, and fatigue parties employed in forts or batteries on the repair or examination of ordnance, mountings, machinery, engines, or other gear, will act under the immediate orders of the Inspector, except in the cases mentioned at (*a*) and (*b*) in paragraph 12.

Inspection of gun wharf or ordnance workshops.

18. He will visit from time to time any gun wharf or ordnance workshop in the district where land service ordnance, mountings, machinery, or other gear are being repaired or adjusted, communicating on each occasion personally before his visit with the officer in charge, who will afford him all facilities. He will call the attention of the officer in charge to any points connected with the work being performed upon which he may think it desirable to remark, and suggest any alteration he may consider necessary.

Journal, entries in.

19. He will enter in a journal the weekly reports of work performed by the several parties of ordnance artificers and other working parties employed under his orders. He will at the same time enter a statement of his own work and inspections during the week, including a description of the mode of effecting the different repairs and adjustments, and showing the time occupied in each case.

20. The journal should also contain full information of any defects or irregularities of working detected in the ordnance, machinery, engines, and gear in Artillery charge.

Quarterly reports to be rendered.

21. He will render a quarterly report on all important subjects contained in the journal; also the quarterly return (Army Form G 859), of the result of weekly workings and inspections of hydro-pneumatic mountings, and of the quarterly practice carried out from the same (*see* paragraph 547), to the Officer Commanding Royal Artillery, who will forward it, with his remarks, to the General Officer Commanding, for transmission to the Adjutant-General.

Immediate report of defects.

22. An immediate report is to be made to the Officer Commanding Royal Artillery of defects as they may arise, together with a recommendation of the steps considered necessary for their rectification.

Attendance at proofs.

22A. The Inspector will attend all proofs of guns and mountings which take place in his district, in order that any specialities may be pointed out to, and useful experience gained by him, of the practical working of the guns and mountings.

Digitized by Google

Practice with heavy guns.

23. The Inspector will attend, as far as his other duties will admit, all important practice with heavy guns, and it will be his duty to assist the commanding officer at the practice in every point connected with the gear or machinery in use, calling attention to any irregularity in the use of the gear, and advising him as to the continuance of practice in case of the suspected or apparent development of defects in any portion of the ordnance, mountings, or machinery therewith connected.

Special duties under orders of O.C.R.A.

24. Under the orders of the Officer Commanding Royal Artillery he will instruct the master-gunners and others in all matters relating to the care and preservation of the machinery and stores connected therewith in their charge.

Instruments for inspection.

24A. The following instruments are supplied to the Inspectors for the purpose of inspection of guns, carriages, and their machinery, and will be held in the personal charge of those officers :—

Clinometers, garrison	1
Micrometers, 12-inch insides and outsides	1

4.—DUTIES OF ORDNANCE ARTIFICERS.

Artificers for the Royal Artillery.

25. When artificers are required by the Royal Artillery at any station, the Officer Commanding will obtain the necessary assistance from the Senior Ordnance Store Officer, it being understood that the requirements of the Royal Artillery take priority of all other duties. Artificers so employed will be attached for the time being, if necessary, to the Royal Artillery, the Commanding Officer being responsible that they are not unnecessarily detained with that corps during any interruption, or after the completion of the specified duty. They will act under either the Officer of the Staff for the Inspection of Warlike Stores, the Inspector of Ordnance Machinery, the Gun Factory Examiner, or such other officer as may be directed.

Duties.

26. Ordnance Artificers will execute any work necessary for the repair or alteration of armaments ; all fitters' work connected with carriages, slides with their parts and appurtenances, hydraulic jacks and mechanism of hydro-pneumatic carriages ; and all ordinary operations for the repair of ordnance and the adjustment of guns and their fittings, including the hydraulic mountings, steam engines, and machinery used in the service of heavy ordnance.

Practice with guns.

27. When available, the artificers will be present during practice with guns of armaments in order to adjust or repair any fitments that may become damaged.

To accompany assistant inspec.

28. The serjeant artificers will accompany and assist inspectors or examiners on tours of inspection of armaments in the district, and will carry out repairs under their

Digitized by Google

orders, for which purpose they will be in possession of tools, as stated in paragraph 30. Application for their services will be made to the Senior Ordnance Store Officer of the district in which they are serving, or the Commissary General of Ordnance. tors or examiners.

29. When not engaged in any of the duties specified in the preceding paragraphs, the artificers will be employed in the ordinary routine of the workshops of gun wharves or ordnance store establishments, and will carry out such work as they may be called upon to perform by the Senior Ordnance Store Officer; but being fitters by trade, they should not be required to do ordinary smiths' and carriage smiths' work, if other qualified artificers are available. They are not trained as wheelers. Additional duties.

30. When artificers are required for any duty away from the gun wharves or ordnance workshops, they will be provided by the Ordnance Store Officer with the tools specified in paragraph 8, page 4 of the Regulations for the Corps of Ordnance Artificers (1889), so that there may be no delay in carrying out small or immediate repairs. A complete set of these tools will always be ready for, or in the care of, each artificer. They will be accounted for by the Ordnance Store Officer as articles in use, a receipt being taken from each artificer for the articles when required by him; and the artificer will be held responsible for their correct return when done with. Those worn out will be exchanged when necessary. To have set of tools.

31. When more extensive repairs are required, use must be made of the sets of tools which are in Royal Artillery charge in various forts for carrying out repairs to armaments. A list of these forts, with which each artificer should be acquainted, will be found in paragraph 174. In less important works, "smiths' tools" only have been provided. These sets of tools will generally suffice for all ordinary work in districts, as the artificers will, provided material be given them, generally be able to manufacture any special tools required. The necessary tools from the above sets should, on the demand of the artificer, be furnished to him at such spot as may be most conveniently situated for carrying out the special repair ordered. Should he require assistance on account of the heavy nature of the work, he will be furnished assistance from the Royal Artillery. When working under the Ordnance Store Department, artificers will receive the same assistance as civilian fitters. Tools in R.A. charge to be available.

32. At stations where an Inspector of Ordnance Machinery is appointed, the ordnance artificers will be Reports of work to be furnished.

Digitized by Google

employed under the immediate orders of that officer, except in the following instances—

(*a.*) In cases where special orders are given from the War Office;

(*b.*) In the case of repairs to ordnance at home ordered in connection with the special examination referred to in (*a*).

The senior artificer of any working party will furnish him with a weekly report of work performed, on Army Form K 1296; but at other stations these reports will be furnished to the Officer Commanding Royal Artillery or Senior Ordnance Store Officer, as the case may require. An Ordnance Artificer working singly will render an account of his work on the form above quoted.

Special for position finding instruments.

32A. In addition to the Ordnance Artificers alluded to in the foregoing paragraphs, there are a certain number of Special Artificers appointed for duty under the Chief Inspector of Position Finding. These artificers will be under the personal superintendence of that officer, and will execute all repairs in connection with the position finding instruments, for which purpose special tools are provided (*see* lists on pages 720*a* to 720*g*.)

32B. When these artificers are required for duty at out stations, they will take with them the "Bag" of tools detailed at pages 720*a* and 720*b*; the larger set of tools, Chest No. 3 H, will remain at head-quarters (Woolwich and other large centres), to enable work of a more extensive character being carried out.

5.—GENERAL SUPPLY OF EQUIPMENT.

Estimates for Equipment.

Artillery estimates.

33. The annual estimates for Artillery services will be prepared as follows:—stores required to keep up the proportions authorised for the armament of existing works, on Army Form G 800, stores required for all services other than the armament of works, on Army Form G 801.

Estimates for new works.

34. A separate estimate on Army Form G 800 will be prepared by the Officer Commanding Royal Artillery for all stores required for the armaments of new works. Armaments for new works will not be estimated for until the Officer Commanding Royal Artillery at the station has received instructions to that effect.

Stores to be kept distinct in Artillery estimates

35. Officers Commanding Royal Artillery, in preparing their annual estimates, will show in detail the positions of the pieces mounted in works; the number of rounds of ammunition for each piece in their charge; and

Digitized by Google

the nature and number of dismounted ordnance in charge, with the reasons why they are dismounted, as well as all other information required by the forms. A detail will likewise be supplied by the Officer Commanding Royal Artillery to the Senior Ordnance Store Officer, with the annual estimate, showing the numbers, nature, and descriptions of the guns, carriages, slides, projectiles, and stores which it is proposed to paint during the following year; also all changes in the armaments, and in the proportions of ammunition held in Artillery charge, occurring since the last estimate, quoting the authority under which such changes have been made.

Ammunition for militia and volunteer artillery.

36. Officers Commanding Artillery Districts will make provision in their annual estimates for gun ammunition for practice and exercise of the Militia and Volunteer Artillery in their respective districts.

Orders with regard to additional guns.

37. Additional guns or guns of different calibre, either for increasing or changing the armaments, will only be demanded, and their equipments estimated for, after the addition or alteration shall have been finally approved by the Secretary of State for War, and notified to Officers Commanding Royal Artillery.

Stores for ordnance about to be withdrawn.

38. Estimates for stores will not be made on account of ordnance about to be withdrawn from the defences within the year for which the estimates are framed.

Requisitions for Equipment.

Requisitions for new armaments.

39. Requisitions for new armaments based upon the approved estimates will be put forward by the Officer Commanding Royal Artillery separately on the prescribed forms, and rendered in duplicate to the Senior Ordnance Store Officer of the station.

Return of Ammunition into Store and Destruction of Shells.

Return to store of shells and cartridges.

40. Except under special circumstances, shells which are filled will invariably be emptied before being returned to Ordnance Store charge. When filled cartridges are to be returned to store, the Officer Commanding Royal Artillery will ascertain from the Ordnance Store Department whether they are to be returned intact, or are first to be broken up.

Shells and cartridges to be emptied by R.A.

41. The emptying of filled shells, and breaking up of filled cartridges, prior to their return to store, is performed as a duty by the Royal Artillery, and the Ordnance Store Department will provide any barrels that may be required to receive the gunpowder. Powder from shells will be

Digitized by Google

wetted as laid down in paragraphs 178 to 180, Magazine Regulations, 1887, before being returned to store. Where there is no Ordnance Store the powder obtained from shells which have been emptied for the purpose of being fired plugged, under paragraph 134, will at once be destroyed under the orders of the Officer Commanding the battery employed in emptying them.

Hoops to be returned with empty barrels.

42. When powder barrels are emptied, all hoops which remain serviceable are to be replaced on the barrels. Such hoops as are broken or damaged will be returned into store with the empty barrels.

Barrels not to be stripped.

43. Under no circumstances are powder barrels to be stripped of their wooden hoops.

Search for projectiles after Artillery practice.

44. Immediately on the close of Artillery practice each day, search will be made on the ranges for unexploded projectiles. The plugged shells and shot which are found will subsequently be handed over to the Ordnance Store Department, but all blind fuzed shells will be destroyed where found as laid down in the following instructions:—

Mode of destruction of shells by guncotton.

a. In order to limit, as far as practicable, the possible projection of fragments of shells which are submitted to this treatment, the shell to be operated upon should, in the first place, be entrenched on all sides by throwing up the adjacent earth, sand, or fine shingle round it to a height at least double that of the shell.

b. A 1½-lb. slab of wet guncotton is to be placed upon the shell, and a dry guncotton primer with detonator, electric (previously coupled up with the conducting wires leading to an exploder, with which these are afterwards connected), is placed upon the charge of wet guncotton.

c. A bag loosely filled with sand or dry earth is placed over the charge thus arranged, care being taken not to disarrange the conducting wires which are connected with the detonator. The bare portions of the connections of the wires with the detonator must be carefully kept from contact with each other and with the earth. The shell should then be covered over with one or more of the remaining bags.

d. When these preparations are complete, and the operators and all persons present have retired under cover (or if no cover is available to a distance of from 800 to 1,000 yards), the conducting wires are connected with the dynamo-exploder, and the charge is detonated.

e. The Officer conducting the operation will see that the directions in *d* are carried out.

Digitized by Google

45. A set of stores for the destruction of shells, together with such quantity of guncotton and detonators as may be considered necessary, will be allowed to all land ranges, and will be demanded in the undermentioned proportions and accounted for by the Officer Commanding Royal Artillery in camp :— Stores for destruction of shells.

MATERIALS REQUIRED FOR EACH CHARGE.

Vocabulary Section II. (1).

	No.
Bags, sand, common	4

Vocabulary Section V. (2).

Detonators, electric, No. 13....	1
Guncotton { dry primers, one perforation, $1\frac{1}{4}$ in. × $1\frac{1}{4}$ in.	1
Guncotton { wet slabs, two perforations, $6\frac{1}{8}$ in. × $6\frac{1}{8}$ in. × $1\frac{1}{8}$ in.	1

STORES.

Articles.	No.	Remarks.
Vocabulary Section III.		
Knives, paring, telegraph jointers	2	
Pliers, side cutting, 7-inch ... ... pairs	1	
Vocabulary Section IV.		
Cloth, emery, fine ... ... sheets	6	Cleaning ends of wire.
Solution, india-rubber, ¼-lb. tins ...	1	Repairing of defective wire.
Tape, india-rubber ... ... lb.	¼	
Twine, choking, 3-thread ... ... ,,	1	Securing charge.
Vocabulary Section VII. (1).		
Exploders, dynamo-electric, field service...	1	
Wire, covered, C 8 ... ... yards	2,000	Old field telegraph cable, unfit for general issue, would do if available.

46. The regulations for packing and storing guncotton and detonators will be strictly observed, and where there are no suitable buildings or sheds available for storage, tents will be used for the purpose. Packing and storage of gun cotton and detonators.

47. Rewards will be paid for the recovery of projectiles and gas checks in accordance with paragraphs 640 to 644 of the Regulations for Ordnance Store Services, 1890. Recovery of projectiles and gas checks.

Digitized by Google

6.—EQUIPMENT FOR ARMAMENTS OF WORKS AND GARRISON ARTILLERY.

Instructions for the Maintenance of Armaments.

Details of equipment.

48. Details of the equipment of armaments of works will be found in the Details, pages 722 to 822, and of Garrison Artillery at pages 1023 to 1054.

Armaments fixed by Secretary of State.

49. The armaments of works of defence are determined by the Secretary of State, in communication with the Commander-in-Chief; and no changes affecting such armaments will be made, except in cases of emergency when the General Officer Commanding may take such measures as the necessities of the Service demand, reporting his proceedings to the Commander in Chief for the information of the Secretary of State for War.

Reports and returns relating to Artillery materiel.

50. All reports and returns relating to Artillery Matériel, will be rendered as laid down in Section XXI of the Queen's Regulations. A.O. 58. 1892.

Returns of Rifled Field Ordnance equipped.

51. When any deficiencies are noted by the Officer Commanding Royal Artillery, upon the Annual Returns of Rifled Field Ordnance Equipped, the Senior Ordnance Store Officer should note on such returns the steps that have been taken to supply the equipments required to complete the Batteries.

Testing new armament.

52. As new guns are mounted in works three rounds with projectiles, the first round being with half charge in the case of the B.L., and reduced charge in the case of R.M.L., will be fired from each R.M.L. gun of 6½ tons and upwards, and each B.L. gun of 6-inch and upwards, to test the mountings and gear, and the general working and fighting condition of the gun. In cases, however, where guns are so mounted that service projectiles could not with safety be fired, paper shot will be used. This firing test will also be utilized, with B.L. guns 6-inch and upwards, for expanding the obturating pads and discs which are issued unexpanded, as directed in the special instructions issued to stations for the purpose. One round will be sufficient to expand one obturator.

Under whom carried out.

53. This trial should be carried out under officers appointed by the Officers Commanding Royal Artillery and Royal Engineers in the District, and all the particulars regarding the gun, mountings, and gear, emplacements, ammunition, service, &c., will be carefully noted by these officers, and embodied in a special form of record, which is to be considered strictly confidential.

Record of joint inspection.

Digitized by Google

Superintendence of testing armaments, &c.

53A. When mountings have not been proved before issue the three rounds ordered in paragraph 52 (and such other as may be necessary) will be fired under the superintendence of the Inspector of Carriages when practicable. Application for instructions for the first firing from any mountings should be made to the Director of Artillery. Officers of Royal Artillery and Royal Engineers should be appointed to attend this firing for the purpose of noting all particulars regarding the gun and mounting, and preparing the record alluded in paragraph 53.

How compiled and rendered.

54. This "Record of Joint Inspection" will be compiled with extreme exactness and in accordance with the Instructions printed on the back of the form. It will receive the approval of, and be rendered in duplicate to the Adjutant General by all General Officers Commanding Districts in which armaments of heavy rifled guns are mounted, one copy being for the use of the Inspector General of Fortifications and of Royal Engineers, and the other for the use of the Director of Artillery. Copies will also be kept in the offices of the Officers Commanding Royal Artillery and Royal Engineers.

Corrections and additions.

55. The Records will be examined annually by these officers and corrected up to date. A joint certificate that this examination has been made, together with a copy of each corrected or additional entry, will be furnished annually on the 1st April to the Director of Artillery, as directed in paragraph 4 of the Instructions on the back of the form.

Joint Armament Returns.

56. In addition to the "Record of Joint Inspection," and in order to maintain a complete record of the whole of the Armaments for Land Service, a "Joint Armament Return" of all Ordnance forming the armament of Works, and having a plan attached showing all emplacements, will be compiled by the Officers Commanding Royal Artillery and Royal Engineers in each District.

To be strictly confidential.

57. This Return will be considered strictly confidential, and will be submitted for the approval of the General Officer Commanding, who will furnish two copies to the Adjutant-General one being for the use of the Inspector General of Fortifications, the other for the use of the Director of Artillery. Identical copies will also be kept up in the offices of the Officers Commanding Royal Artillery and Royal Engineers.

Alterations and amendments.

58. On the 1st April in each year, a list of any alterations and amendments that may have become necessary in the Return since previous report, will be furnished to the Adjutant-General.

Digitized by Google

Ordnance and magazines in charge of R.A. and O.S.D. respectively.

59. All ordnance mounted on the defences, as well as all dismounted ordnance lying within the precincts of the batteries for which the Commanding Officer of Artillery is responsible, and all magazines containing any gunpowder in charge of the Artillery, will be in charge of the Royal Artillery. All other ordnance and gunpowder will be in charge of the Ordnance Store Department.

Arrangement of stores.

60. Instructions for the arrangement of Stores in a work, are laid down in Appendix II., pages 670 and 671.

Rules to be observed to avoid divided responsibility.

61. In order that there may be no divided responsibility between the Royal Artillery and the Ordnance Store Department as to the maintenance of the proportions, the following rules will be observed :—

Army Form G. 908.

(*a*) When there is not sufficient accommodation in a work for the whole of the proportions being kept by the Royal Artillery, that which cannot be retained by the Royal Artillery is to be kept in charge by the Ordnance Store Department, the senior officer of which will be held responsible that the respective proportions are kept separate, complete, and ready for immediate issue. It is to be understood that these equipments, whether in charge of the Royal Artillery or the Ordnance Store Department, are independent of any reserves which it may be considered expedient to maintain at the station in charge of the Ordnance Store Department. A statement of the above distribution, showing in detail the authorised armaments of the district, with the full proportions of carriages, side-arms, ammunition, and all stores to be maintained for each and every fort, will be prepared for the approval of the General Officer Commanding by the Officer Commanding Royal Artillery and the Senior Ordnance Store Officer in concert, in triplicate on Army Form G 908. One copy will remain with the Officer Commanding Royal Artillery, another with the Senior Ordnance Store Officer, and the third will be forwarded by the General Officer Commanding to the Adjutant-General.

To be prepared in triplicate.

Responsibility for maintenance of proportions.

(*b*) The Officer Commanding Royal Artillery and the Senior Ordnance Store Officer will be held responsible that the proportions to be kept up by each are duly maintained, and that all expenditure and exchanges are provided for in their respective estimates.

Digitized by Google

(*c*) The Officer Commanding the Royal Artillery will also on the 1st January in each year, furnish through the General Officer Commanding a return on Army Form G 932, of amendments rendered necessary by such regulations as have been issued since the approval of the statement on Army Form G 908. The return will be prepared after consultation with the Senior Ordnance Store Officer of the station, in the same manner as laid down at sub-paragraph (*a*). Amendments.

(*d*) The spare parts of guns, carriages, and slides for forts or batteries (*see* details pages 840 to 1022) will be held on charge by the Royal Artillery. Spare parts, how held on charge.

Those allowed per district or sub-district may be either held on charge by the Royal Artillery or kept by the Ordnance Store Department, as may be found most convenient.

62. The word "District" throughout the detailed tables of proportions will be understood to mean the extent of an Artillery command in the United Kingdom or that of a station abroad. Definition of the word "district."

62A. The term "Armament Sub-District" is used to define the extent of the charge of an accountant. The number of works in each sub-district depends on local conditions. Sub-district.

63. Articles of which the application is general and irrespective of the nature of ordnance, and which are supplied in certain proportions to each battery, will be demanded in the same amount, whether the armament of a battery comprises one or several classes of ordnance. In preparing requisitions for this class of stores, the local signification of the word "battery" must sometimes be departed from, and the entire armament of an enclosed fort, or of a portion of a line of defence, not too extensive for the convenient use of the stores, will be treated in all respects as though the pieces formed a single battery. General supplies to batteries. Signification of the word "battery."

64. Forts and batteries can often be grouped together according to their importance and situation, in such manner that, as regards stores, a considerable reduction in the numbers laid down may be made with advantage to the Service. The same arrangement should be followed in respect of laboratories and their stores, the selection of the laboratories to be equipped being made with reference to such grouping. Grouping of forts and batteries.

65. Articles of which the application is general and irrespective of the nature of ordnance, but which are supplied in proportion to the number of pieces, will be Not governed by nature of ordnance,

Digitized by Google

demanded on the general aggregate of the ordnance in the district for which the demand is made, without regard to the nature of the ordnance.

Certain supplies by districts or stations.

66. Certain articles, such as knock-up wrenches, transporting axle-trees, drugs, sling wagons, &c, of which the use is more or less general, and of which the number required is small, are supplied in a certain proportion for each district, station, or sub-district.

Stores for ordnance used for saluting, &c.

67. Ordnance used exclusively for saluting and signalling purposes, and time guns, will only be allowed such stores as are sufficient for carrying out the particular service.

Guns used for salutes and dismissal of recruits.

68. The guns to be used for salutes, where authorised, and for dismissal of recruits, will be decided on by the General or other Officer Commanding the troops at the station, subject to confirmation by the Commander in Chief. Whenever the guns selected for these services are not of the smallest available calibre, the reasons for the selection will be given. The minimum number of guns from which a salute may be fired is laid down in the Queen's Regulations.

Proportions of Cartridges and Projectiles.

No. of rounds of ammunition to be maintained for armaments.

69. The number of rounds of ammunition to be maintained for armaments at home and abroad for rifled and smooth-bore ordnance will be in accordance with the following tables :—

RIFLED.

	Home.	Abroad.
Fortresses.		
13·5-in. B.L. guns ..	100 rounds each piece	100 rounds each piece.
Other B.L. guns... ...	100 ,, ,, ,,	200 ,, ,, ,,
17·72-in. and 16-in. R.M.L.	100 ,, ,, ,,	100 ,, ,, ,,
Other R.M.L. guns and howitzers	100 ,, ,, ,,	200 ,, ,, ,,
R.B.L. guns	100 ,, ,, ,,	200 ,, ,, ,,
Batteries of Position.		
When forming part of the armament of fortresses	100 ,, ,, ,,	200 ,, ,, ,,
Movable Armaments ...	100 ,, ,, ,,	200 ,, ,, ,,
Siege Batteries	200* ,, ,, ,,	— —

*100 to be kept filled in Royal Artillery charge, and 100 empty in Ordnance Store charge, except for the battery at Woolwich, for which special arrangements are made.

Digitized by Google

SMOOTH BORE.

Home, 50 rounds each piece.
Abroad, 100 ,, ,, ,,
32-pr. S.B.B.L. guns, 100 rounds per gun.

QUICK FIRING ORDNANCE.

800 rounds per gun for 3 and 6 prs.
400 ,, ,, ,, heavier natures

MACHINE GUNS.

10,000 rounds per gun.

70. Special arrangements are made with regard to the proportion of ammunition to be maintained in Ordnance Store charge for Volunteer Batteries of Position. Proportions for Volunteer Batteries of Position.

71. All cartridges and shells in charge of the Royal Artillery, except those for S.B. ordnance (*see* paragraphs 73 and 74), will be kept filled as far as store accommodation will admit. Cartridges and shells to be maintained filled.

72. At forts where the expense magazines are contiguous to other buildings, the proportion of filled cartridges and shells is not to exceed two rounds a gun, provided that a further supply of filled cartridges and shells can be stored at a convenient distance from the fort. Proportion in forts when expense magazines are near buildings.

73. Cartridges and shells for all mortars will invariably be kept empty, but 10 cartridges a piece for other S.B. ordnance will be kept filled in Royal Artillery charge. Cartridges and shells for mortars and S. B. Ordnance.

74. The only loose powder that is to be kept in Royal Artillery charge will be that required for S.B. guns in excess of the 10 rounds a gun ordered to be kept filled by paragraph 73, and that required for mortars, powder-horns, S.B. shells, and for shells belonging to rifled ordnance that cannot be kept filled. Loose powder.

75. In cases where it is found, from circumstances connected with insufficient store accommodation, or for other reasons, that the orders contained in paragraphs 69 to 74 cannot be carried out, Officers Commanding Royal Artillery will report specially on the subject, through the General Officer Commanding, to the Adjutant General. Insufficient store accommodation to be reported.

Digitized by Google

Proportions of Fuzes and Tubes.

Reference to the detailed instructions.

76. The proportions of fuzes and tubes to be maintained for garrison ordnance, will be as laid down in the Details for Armaments.

Supply of fuzes, tubes, and laboratory stores.

77. In demanding fuzes, tubes, primers, and other laboratory stores supplied in sealed cylinders, the numbers given in the details of equipment will be adhered to as closely as possible ; but, in order to avoid the deterioration caused by unsealing cylinders for the issue of fractional parts of their contents, these numbers may be increased by the excess contained in one cylinder. All cylinders will therefore be issued full.

Half to be in R.A., and half in O.S.D. charge.

78. Half of these proportions will be in charge of the Royal Artillery, the other half will, in time of peace, be held in reserve by the Ordnance Store Department at the depôt upon which the forts and batteries are dependent for their supplies, except at Gibraltar, where the full equipment of tubes and fuzes will be kept in Royal Artillery charge. Thoroughly dry stores should alone be used for storage of tubes and fuzes in times of peace, and subject to this condition, any convenient place, not being a magazine or cartridge store, which is secure, may be used. This rule applies equally to fuzes and tubes appropriated to guns under paragraph 79.

Location of fuzes and tubes.

79. The whole of the fuzes and tubes in charge of the Royal Artillery will be kept in the works to which they are appropriated.

Those in O.S.D. charge to be always in readiness for issue.

82. The Ordnance Store Officer will always keep the proportions of fuzes and tubes for the guns in his district in readiness for immediate issue, and the Officer Commanding Royal Artillery, in concert with the senior Ordnance Store Officer of the station, will see that they are correct in quantity and condition.

In war all to be with the guns.

83. In the event of war, the whole of the fuzes and tubes should be transferred to Royal Artillery charge and placed with the guns.

Cylinders not to be opened till wanted.

84. Cylinders containing the articles enumerated in paragraph 77, will on no account be opened, unless their contents are required for immediate use.

Open cylinders to be replaced,

85. When cylinders have been opened for immediate use and their contents have not been used up, they will be

Digitized by Google

returned to the Ordnance Store Department, and complete cylinders will be issued in their place.

86. Detonators, fuzes, or tubes, especially those containing fulminate, will be returned into store properly packed. Detonators, &c., to be returned properly packed.

Instructions as to Miscellaneous Stores.

87. Depression Range-finders are allowed for Coast Batteries (armed with heavy guns), and a list of such works, with the proportions approved for each, and instructions for the care and preservation of these instruments, will be found in Appendix III. (pages 672 to 687). Range-finders.

88. Special arrangements will be made with regard to Position Finding, for works selected for the purpose at the several stations. Position Finding.

89. War rockets will not be maintained as a portion of any equipment. They will only be employed under special circumstances. War rockets

90. Lists of gear and stores for landing, transporting, mounting, and dismounting guns of 18 to 47 tons, also special sets for guns of 80 and 100 tons, will be found in Appendix I. (pages 654 to 668), and are supplied to districts, as laid down at page 669. These stores will be available for the general requirements of the forts in the district, and will be kept in Royal Artillery or Ordnance Store charge as directed. Care will be taken that the gear, &c., is kept in proper order, and is at all times ready and fit for use. To ensure this, and also that the men who would have to use the gear have a practical knowledge of its working, the Officer Commanding Royal Artillery will from time to time exercise the men in its use. Special stores for landing, mounting, &c., guns.

91. In all cases where guns are mounted on carriages and slides fitted for hydraulic buffers, the buffer will invariably be kept on the slide filled with the proper quantity of oil; and when not required for immediate use, the piston will be disconnected from the carriage and pressed home into the cylinder; the buffer will then be filled quite full with oil, and when required for practice, the proper quantity of oil for firing will be obtained by drawing off the surplus. When works, however, are under repair, or persons other than the Artillerymen actually in charge, have access to places where guns having hydraulic buffers are mounted, the Officer Commanding Royal Artillery will use his discretion in having the Hydraulic buffers.

Digitized by Google

buffers temporarily emptied, but they must be refilled as soon as possible.

Rope mantlets.

92. When rope mantlets have been fitted to shields, and have been found complete and in good working order, on the joint inspection of the Officer Commanding Royal Artillery and Commanding Royal Engineer, they will be taken on charge by the Officer Commanding Royal Artillery, who will be responsible that they are kept in a safe condition and at all times ready and fit for use; he will therefore make requisitions in the usual manner upon the Royal Engineer Department to carry out any repairs, and also for the necessary application of a solution of chloride of calcium.

93. Rope mantlets, according to pattern required, will be provided and fitted for all guns actually mounted behind iron protection. In the case of open batteries, however, in which mantlets, when hung, would be fully exposed to the weather, and therefore liable to rapid deterioration, they will be kept in store in time of peace, and will be hung only when required for drill or practice, or for actual service in time of war.

94. Instructions for the care and preservation of rope mantlets are laid down in paragraphs 578 to 584.

Demands for racers, &c.

95. Racers, pivots, traversing racks, and graduated arcs will be demanded and fixed by the Commanding Royal Engineer.

Demands for pivot plugs and pins.

96. Pivot plugs and pivot pins for 32-pr. S.B.B.L. guns for flank defences, will be demanded by Officers Commanding Royal Artillery Districts, through the local Ordnance Store Officers.

Charge of above.

97. When the works are completed, the racers, pivots, traversing racks, and graduated arcs will be taken on charge by the Officer Commanding Royal Artillery, and accounted for in the same manner as other fixtures. Circular bearing-plates and holding-down screws, issued with R.M.L. gun-carriages adapted for high-angle fire, will be similarly accounted for.

Approved patterns of above.

98. The approved patterns of racers and pivot plugs for guns are shown in Appendix VIII. (pages 694 to 699), and of traversing racks and graduated arcs in Appendix VII., page 693.

Graduations of arcs.

99. The graduations are numbered as required in each case, according to the position and character of the emplacement for which the arc is intended. The numerals range between 0 and 359, inclusive, and read from left to right.

Digitized by Google

Issue of red flag to practice batteries.

100. In order to prevent accidents to vessels and to facilitate the practice from coast batteries, a red flag will be issued to practice batteries where the range is much frequented by shipping. A list of the works which will be so supplied is given in Appendix IV. (pages 688 and 689).

7.—EQUIPMENT OF SIEGE ARTILLERY, BATTERIES OF POSITION, AND MOVABLE ARMAMENTS.

Details for Siege Artillery

101. Details of the equipments for Siege Artillery will be found in the Siege Artillery Drill, 1891

Distribution of Siege Companies.

102. Siege Train Companies are located at the following stations :—

Dover—Woolwich—Plymouth.

Details of equipment.

103. Details of the equipment for these Companies will be found at page 823.

Accounting for equipment.

104. The guns and stores forming the equipment of these Companies will be in the charge of, and will be accounted for by, the Officer Commanding the Company.

Details for batteries.

105. Details of the equipments of Batteries of Position will be found in Part 3.

Ammunition.

106. When Batteries of Position form part of the armament of Fortresses, the same number of rounds will be maintained for the guns as for Garrison guns of similar calibre, as laid down in paragraph 69; but when these Batteries are intended for general defensive purposes in a district, a reserve of 150 rounds per gun, in addition to the ammunition with the Battery (as shown in the Battery details) will be maintained in Royal Artillery or Ordnance Store charge, as the magazine accommodation available may render convenient. The proportions of the several natures of projectiles (required for this reserve) should conform as nearly as possible to those in the Battery details.

Movable armaments.

107. Movable Armaments, consisting of Medium and Light B.L. and R.B.L. guns, and R.M.L. guns and howitzers form part of the defensive armament of Districts. The same number of rounds will be kept filled in Royal Artillery charge for these pieces as for guns in Works, and in addition a reserve of 150 rounds will be kept empty in Ordnance Store charge. Details of the Equipments of Movable Armaments will be found in the details, pages 809 to 822.

Digitized by Google

Range-finders allowed.

108. Large Watkin Field Range-finders are allowed to Movable Armaments in such proportions as are considered necessary, according to the grouping of the guns. Instructions concerning these instruments will be found at p. 685.

8.—ARTICLES FOR DRILL AND INSTRUCTION OF ROYAL ARTILLERY.

Proportion.

109. The proportion of stores allowed to Royal Artillery for the purposes of drill and instruction, are included in the Details for Staff Service, and Depôt Companies (*see* pages 1023 to 1045).

Stores for laboratory instruction.

110. Stores for laboratory instruction are allowed to the Royal Artillery Stations shown in Appendix V. (page 690), and a detail of the stores comprising a set is given in pages 1035 to 1037.

Additional stores for certain R.A. districts.

111. Stores are allowed in addition for heavy gun drill and instruction to Royal Artillery Districts where Instructors of Gunnery are appointed (*see* list at page 1030).

Proportion of drill stores for District Establishments.

112. N.C.O.'s and men of the District Establishments will have the same proportion of stores for gun drill as Service Companies, and will also participate, when convenient, in the use of the laboratory stores allowed for the instruction of Service Companies.

Electric Stores for Position-finding.

112A. Stores for instruction in electricity are allowed to certain stations where Position-finding has been installed (*see* list on page 1028*a*).

Stores to be maintained at head-quarters.

113. With the exception of the unserviceable fuzes supplied annually to Companies, the proportion of stores allowed to Garrison Artillery will be maintained at the Head Quarters or Out Stations.

Fuzes for instructional purposes.

114. At stations abroad, if there are no unserviceable fuzes for instructional purposes in possession of the Royal Artillery or Ordnance Store Department, service fuzes which have been longest in Royal Artillery charge, will be used, and they will be replaced from the Ordnance Stores.

9.—PRACTICE AMMUNITION.*

Garrison Artillery.

Allowance of ammunition.

115. The allowance of ammunition for the annual practice of Garrison Artillery is comprised under the following heads:—

Station Practice.
Regimental Practice.
Siege Practice.
Company Practice.
Position-finding Practice.

* The revision of the following proportions will be reconsidered with reference to A.O., No. 166, dated August, 1891.

Digitized by Google

Station Practice.

116. At station practice all R.M.L. guns, 7-inch to 12·5-inch, and all B.L. guns, 6-inch and over, which are mounted on sliding carriages and slides, and which are so mounted as to be capable of being fired with safety, will be fired three times consecutively every second year. When practice is to take place.

117. In the case of guns on hydro-pneumatic disappearing carriages, two rounds (one half and one full) will be fired consecutively every three months, viz., in January, April, July and October. Palliser shot or cast-iron common shell, if available, will be used for this purpose, and should be demanded annually, but pending supply, Service projectiles are to be used. Practice from guns on H.P. carriages.

118. If, when the biennial station practice or quarterly practice in the case of B.L. guns on H.P. disappearing carriages for any fort is due, any entire group of guns has been, or is about to be, used for regimental practice, such group will be exempt from station practice. (See paragraph 129). When exempt from station practice.

119. The 17·72-inch R.M.L. guns at Gibraltar and Malta will be fired four times consecutively every half year, and the 16-inch R.M.L. guns at Dover three times consecutively every half year. Practice from 17·72 and 16-inch guns.

120. The projectiles to be fired from guns other than those mentioned in paragraph 117 will be Palliser shot, but in those works where Shrapnel shells are allowed as part of the equipment, these projectiles may be substituted for Palliser shot to the extent of one third of the total number of rounds allowed. Use of Palliser shot and Shrapnel shells.

121. In the case of guns which are prevented, on account of danger to shipping or other property, from firing ordinary projectiles, paper shot or blank ammunition will be used. Blank ammunition to be used in special cases.

122. For blank ammunition, full charges will be used for all B.L. guns and for R.M.L. guns 12·5-inch and over, and reduced charges in silk-cloth cartridges for all other guns for which no blank charge may have been prescribed. Charges to be used for blank ammuuition.

123. The three rounds will invariably be fired on the same day from the whole of the guns in each separate work, or in the case of large works from as many complete groups as possible. Guns having the same source of ammunition supply should, as a rule, be in the same group. The grouping, generally, is determined according to the bearing of the guns, and their number and position, which should facilitate their being commanded as a battery. Periods for firing. Grouping of guns.

Digitized by Google

Station practice to be carried on annually by half the works in district.

124. Except with guns mounted on hydro-pneumatic disappearing carriages, and the 17·72-inch and 16-inch R.M.L. guns, station practice will be carried on annually from half the works in a district; the whole of the guns, or complete groups of guns, in each of the works chosen being manned simultaneously, and all arrangements made which would be necessary in action, the object being not only instruction, but also to test thoroughly the working condition of the mountings and gear as well as all the fitments and accessories of the forts and batteries, the supply of ammunition, and the means for fighting the guns generally.

Grouping of guns.

125. Particular attention will be paid to the arrangements necessary in each fort or battery for its proper subdivision into groups of guns (see paragraph 124); and, in order to ensure that the experience gained at such station practice is not lost, the grouping adopted will be shown in detail, with any remarks and recommendations that may suggest themselves for guidance in future practice.

Mode of using targets.

126. Targets, either moving or anchored, will be used for shotted practice if practicable. On all occasions a special idea for the practice should be prepared, and the targets be placed in the positions ships would occupy or follow the course the ships would take under the conditions laid down for attack.

Result of practice to be reported.

127. Reports on the result of station practice will be rendered annually, in duplicate, by the Officer Commanding Royal Artillery, through the General Officer Commanding, to the Deputy Adjutant-General, Royal Artillery, Horse Guards, directly after the conclusion of the practice. One copy will be transmitted to the Director of Artillery.

Mountings to be examined after practice.

128. At the conclusion of practice, an examination of the mountings will be made by the Inspector of Ordnance Machinery or qualified ordnance artificer, and the result embodied in a special report which should accompany the practice report.

Regimental Practice.

Allowance of ammunition

129. The annual allowance of ammunition for regimental practice will be as follows:—

(*a*) For each station where only one company is quartered—

4 rounds for each distinct nature of R.M.L. gun, 7-inch to 12·5-inch, and B.L. gun, 6-inch and over, mounted in the command, with a minimum total of 16 rounds where only a small diversity of natures is available.*

* For B.L. guns on H.P. disappearing carriages, the ammunition allowance for station practice will be utilised as far as possible.

Digitized by Google

12 rounds for each nature of "lighter ordnance" mounted in the command (see paragraph 130), except those that have been used for company practice, with a minimum total of 16 rounds.
40 rounds of quick-firing ammunition 3-pr. or 6-pr.

(*b*) For each Lieutenant-Colonel's command where two or more companies are stationed together—
6 rounds for each distinct nature of R.M.L. gun, 7-inch to 12·5-inch, and B.L. gun, 6-inch and over, mounted in the command, with a minimum total of 24 rounds where only a small diversity of natures is available.*
12 rounds for each nature of "lighter ordnance," mounted in the command (see paragraph 130), except those that have been used for company practice, with a minimum of 24 rounds.
60 rounds of quick-firing ammunition, 3-pr. or 6-pr.

Lighter Ordnance.

130. In calculating the number of rounds to be fired from "lighter ordnance," all descriptions of S.B. guns and howitzers (32-pr. S.B. B.L. excepted) will be classed as one nature, and in the same way all descriptions of S.B. carronades and of mortars will also be classed as one nature.

Allowance for native Artillery.

131. The companies of native Colonial Artillery at Hong Kong will be allowed the same proportion of ammunition as for a Lieutenant-Colonel's command of two or more companies; at Ceylon and Mauritius, the company of Royal Artillery and company of native Colonial Artillery at each station will be combined, and will also draw the same allowance as for a Lieutenant-Colonel's command of two or more companies.

Allowance of ammunition where there are no armament works.

For the West India Regiment a special allowance for gunners will be granted.

132. Companies stationed at Shoeburyness and Woolwich, or at other places where there are no armament works will be allowed ammunition as follows:—

(*a*) When only one company can carry out practice at a time—
4 rounds from each of four natures of heavy guns, R.M.L. or B.L.
12 rounds, 80-pr. or 64-pr. R.M.L. guns (except when used for company practice).
12 rounds, R.M.L. howitzer.
12 „ R.B.L. gun (except when used for company practice).
12 rounds, B.L. gun under 6-inch.
12 „ 2·5-inch R.M.L. gun.
40 „ 3-pr. or 6-pr. quick-firing guns.

Digitized by Google

(*b*) When two or more companies practise together—
6 rounds from each of four natures of heavy guns, R.B.L. or B.L.
12 rounds, 80-pr. or 64-pr. R.M.L. guns (except when used for company practice).
12 rounds, R.M.L. howitzer.
12 ,, R.B.L. gun (except when used for company practice).
12 rounds, B.L. gun under 6-inch.
12 ,, 2·5-inch R.M.L. gun.
60 ,, 3-pr. or 6-pr. quick-firing guns.

Guns which are to be used for regimental practice.

133. Regimental practice will be carried out from the guns actually mounted as the armament of the district or command, and from the principal different types of mountings in use. It will be carried out deliberately and be spread over as long a period as circumstances may render desirable. Its object is to enable all ranks to become familiar with every nature of ordnance and mounting in use, and as far as possible with every description of projectile and fuze.

Projectiles to be used.

134. The projectiles to be used will (unless otherwise specified) be common shells. In cases where shrapnel shells are allowed as part of the equipment of guns, half the number of common shells for practice will be loaded with blowing charges and fired to represent shrapnel, and the other half will be fired plugged, except in special cases where a safe land range or other facilities for testing the action of fuzes may be available, when they may be filled and fired as for service.

Use of Shrapnel shells and case shot.

135. Shrapnel shells may be drawn in lieu of common shells for one nature of gun in each year, and varied in successive years. Case shot may be drawn in lieu of shells for practice with guns used for flank defence of ditches.

Projectiles for quick-firing guns.

136. In the case of quick-firing guns, 10 per cent. of the projectiles will be steel shells.

Result of practice to be reported.

137. Reports on the result of regimental practice will be rendered annually, in duplicate, in the same manner as reports of station practice (see paragraph 127), and any defects that may be observed in the guns or their equipments will be brought to notice.

Mountings to be examined after practice.

138. At the conclusion of practice a special examination of the mountings will be made by the Inspector of Ordnance Machinery or qualified ordnance artificer, and a special report furnished, which should accompany the practice report.

Digitized by Google

Siege Practice.

Allowance of ammunition.

139. Siege practice will be carried out under special directions, which will be issued annually by the Adjutant-General. Ammunition to the value of 180*l.* per company on the lower establishment and 360*l.* per company on the higher establishment will be allowed, and the distribution to the different natures of ordnance will be arranged according to the scheme of practice for the current season.

Special report of result of practice.

140. A special report will be made on conclusion of the practice to the Deputy Adjutant-General, Royal Artillery.

Company Practice.

Allowance of ammunition.

141. The annual allowance of ammunition for company practice will be 140 rounds of 80 or 64-pr. R.M.L., per company on the lower establishment and 280 per company on the higher establishment, 40 rounds of which for the former company and 80 for the latter company being utilised for competitive practice, but a portion of this may, at the discretion of the Officer Commanding Royal Artillery, be commuted for heavier natures on the scale given in paragraph 146. The number of the heavier natures so commuted is not to exceed 30.

Ammunition for elementary instruction.

142. Depôt companies will be allowed ammunition for elementary instruction in the proportion of 20 rounds for each squad of 15 non-commissioned officers and young soldiers available, up to a total of 100 rounds per company.

Ammunition for district staff.

143. The district staff will be allowed 20 rounds for each squad of 15 non-commissioned officers and men available.

Allowance for native Artillery.

144. Corps of native Colonial Artillery of any strength up to 200 will be considered equivalent to a company of Royal Artillery for purposes of battery practice; and corps of greater strength, when over 350, as equal to two companies of Royal Artillery.

Guns and projectiles for instructional practice.

145. Company instructional practice may be carried out from any 10-inch to 6-inch B.L. guns and 64-pr. to 10-inch R.M.L. guns available at the station. The projectiles to be used will be 80 per cent. common, and 20 per cent. Shrapnel shells or common shells in lieu thereof.

Commutation of ammunition.

146. As the allowance of ammunition for company practice has been based upon that for medium guns, the commutation for heavier natures will be in the following proportions:—

36	rounds	80 or 64 pr.	R.M.L.	equal	1	rounds	10 in.	
27	,,	,,	,,	,,	1	,,	9·2 in.	B.L.
9	,,	,,	,,	,,	1	,,	8 in.	B.L.
5	,,	,,	,,	,,	1	,,	6 in.	B.L.
8	,,	,,	,,	,,	2	,,	10 in.	R.M.L.
5	,,	,,	,,	,,	2	,,	9 in.	R.M.L.
5	,,	,,	,,	,,	3	,,	7 in.	R.M.L.

Digitized by Google

Common shells to be fired plugged.

147. The common shells will be fired plugged, except in certain cases where a safe land range may be available, when a proportion of them may be filled and fired as for service. Where live shells cannot be fired with safety, common shells, with blowing charges to represent shrapnel, will be used instead.

Ammunition for company practice not allowed in certain circumstances.

148. Ammunition for company practice will not be allowed to companies that carry on siege practice (see paragraph 139) or are detailed for the Camp of Instruction at the Western Forts, Isle of Wight. In the latter case, however, the rounds authorised for competitive practice by paragraph 141 will be drawn.

Result of practice to be reported.

149. Reports on the result of company practice will be rendered annually to the Deputy Adjutant-General, Royal Artillery.

Position-finding Practice.

Allowance of ammunition.

150. Position-finding practice at Schools of Instruction will be carried out under special instructions issued annually by the Adjutant-General, and the proportion of ammunition will be 10 rounds for each squad of 15 officers, non-commissioned officers, and men employed. The ammunition will be fired from the particular guns selected for the practice.

Additional allowance of tubes.

151. Fifty vent-sealing electric tubes per group of B.L., and R.M.L. axial-vented guns, and 50 electric tubes, No. 10, per group of heavy R.M.L. guns, except axial-vented guns, will be allowed annually for guns in connection with Position-finding, and 50 copper friction tubes per group of heavy guns not in connection with Position-finding, for expenditure at general manning of works.

Special report of result of practice.

152. A special report will be made on the conclusion of the practice to the Deputy Adjutant-General, Royal Artillery.

General Instructions.

Re bulkheads.

153. When it is necessary for the purpose of practice or exercise to remove the bulkheads separating the emplacements of heavy guns, the service will be carried out by the Royal Artillery, the Royal Engineers furnishing such information as may be requisite to expedite the removal. The bulkheads will also be replaced by the Royal Artillery.

Responsibility for removal.

154. The responsibility for any damage done during the removal and replacing of the bulkheads, due to want of care, will fall on the Royal Artillery.

Digitized by Google

Shells; how to be filled, &c.

155. Plugged common shells will be filled with water, and the metal plugs screwed into the fuze holes. R.B.L. shells of field service gauge will also have the papier-maché wads placed in the sockets.

Shells filled with water.

156. No more shells than those required for immediate practice will be filled with water.

To be emptied before being placed in store.

157. Shells filled with water which have not been expended in practice, or which have been recovered after practice, will be emptied and dried before being placed in store.

Shells which are to be filled with coal dust.

158. All shells (except S.B.) fired with blowing charges will be filled with dry coal dust, space only being left for the insertion of the fuze and of the bag containing the blowing charge.

Fuzes for mortar shells.

159. Fuzes, with blowing charges only, will be supplied for mortar shells.

Mode of making demands for ammunition.

160. Demands for ammunition will be made on Army Form G 805, and will be dealt with in the manner laid down for small-arm ammunition. Projectiles condemned for service, but considered fit "for practice only," will be demanded if there are none on charge.

Cartridges and shells which are to be filled by Royal Artillery.

161. For company, regimental, or position-finding practice the cartridges and shells will, where practicable, be filled by the Royal Artillery, the laboratories, or other suitable building most convenient to the practice battery, being selected for the purpose by the Officer Commanding Royal Artillery. In all other cases the ammunition of oldest manufacture and those contained in packages which have been opened for inspection will always be first expended, and will be replaced by the next supply from store. Shells required to be fired plugged should be taken from any empty shells that may be on charge, or should be demanded from store. Those set apart as fit for practice only should be utilised for this purpose as far as possible.

Spare tubes and primers.

162. No spare fuzes will be authorised for practice, but spare friction tubes and vent piece primers will be allowed in the proportion of 10 per cent.

Bags for bursters and cartridge covers.

163. Calico and paper bags for bursters of shells, and paper covers for cartridges, need not be returned to store at the conclusion of gun practice, but should be shown as expended.

Lacquering of bores.

164. Care will be taken that the annual and biennial lacquering of bores, prescribed in paragraph 255, is carried out immediately after the conclusion of the annual and biennial practice.

Making up Ammunition.

Making up of cartridges.

165. Cartridges for the equipment of all ordnance, except mortars, will be made up and packed at Woolwich

Digitized by Google

in the Royal Laboratory, or at other stations where there is suitable laboratory accommodation, by competent laboratory men, under an Officer of the Staff for the inspection of Warlike Stores, and with the assistance of a working party of the Royal Artillery when necessary.

Working pay.

166. Working pay will be allowed to the working party of Royal Artillery according to regulation for ammunition so made up in Ordnance Store premises under the Officer of the Staff for the inspection of Warlike Stores.

Transfer of ammunition.

167. When practicable, the Royal Artillery will transfer the ammunition to forts and batteries in the neighbourhood of the laboratory where it may have been made up and packed. If this course be not practicable, it will be forwarded by the Ordnance Store Department.

Shells; by whom filled.

168. At home stations shells will, as a rule, be filled by the Royal Artillery. At stations abroad where facilities for the purpose exist, all shells for Royal Artillery services will be filled by the Ordnance Store Department. The filling of Palliser shot (late "shell") with sand will also be performed by the Royal Artillery; but at works where sand cannot easily be procured, the operation will be carried out at the Ordnance Store Department, previous to issue, by men of the Royal Artillery without working pay. The Officer Commanding the Royal Artillery will arrange with the Senior Ordnance Store Officer locally for this work to be performed whenever necessary. These shot will be marked with the letter W, as directed in paragraph 366 of the Regulations for Magazines, &c., 1887.

Blank Ammunition.

Authorised salutes to be at public expense. Quarantine.

169. The ammunition for all salutes and signal guns authorised by the Queen's Regulations will be supplied at the public charge; but in the event of guns being fired to enforce quarantine or port regulations, the value of the ammunition used for such purpose will always be recovered by the Senior Ordnance Store Officer at the station.

Silk cloth cartridges.

170. Silk cloth cartridges will invariably be used for blank firing.

10.—TOOLS.

Tools for artificers of Artillery Companies.

171. Tools when necessary are issued to the Royal Artillery for the use of Artificers of Artillery Companies; but when these artificers are employed under the orders of the Senior Ordnance Store Officer, for carrying out repairs in conjunction with Civilian and Departmental Artificers, they will be supplied with tools from the Ordnance Store Department.

Tools for scraping and painting ordnance.

172. Tools for scraping and painting S.B. and rifled ordnance will be found at pages 616 to 621.

Digitized by Google

173. Field forges, workshops, and sets of tools, are provided at certain Works in every District at home and station abroad to enable repairs to all garrison ordnance, carriages, and slides in the District in Royal Artillery charge to be carried out in the Work by Ordnance and other Artificers. Field forges, workshops, and tools for repairing armaments.

174. The following list shows the approved distribution of these forges, workshops, and tools, which are to be maintained in Royal Artillery charge. Lists of the tools will be found in Appendices X. and XI. (pages 700 to 712). Distribution.

Districts and Works.	Field Forge.	Workshop with permanent Forge.	Tools for repair of Ordnance. Re-venting R.M.L.	Re-coppering B.L.	Special and facing R.B.L.	Tools for repair of wrought-iron garrison carriages and slides (3 D).*	Tools for repair of wood garrison carriages and slides (4 C).	Remarks.
North Western.								
Seaforth	1	—	1	—	—	1	1	
North Eastern.								
Tynemouth	—	1B	1	—	—	1	1	
North Britain.								
Kinghornness	1	—	1	—	—	1	—	
Inchkeith	—	1B	1	—	—	1	—	
Leith Fort	—	—	—	—	—	—	—	Dependent upon Ordnance Workshop.
Eastern.								
Landguard Fort	—	1A	1	—	—	1	1	
Shotley Battery	1	—				1		
South Eastern.								
Archcliffe Fort	1	—						
Pier Turret	—	1B	1	—	1	1	1	† Dependent upon Ordnance Workshops.
Castle (Spur Battery) ...	—	1B						
Western Heights† ...	—	—						
Newhaven ,, ...	1	—	1	—	—	1	1	
THAMES.								
Gravesend, S.D.								
Tilbury Fort	—	1B	1	—	—	1	1	
New Tavern Fort... ...	—	—	—	—	—	—	—	Dependent upon Tilbury Fort.
Coalhouse Fort	—	1A	1	—	—	1	—	
Cliffe Fort...	—	1B	1	—	—	1	—	
Shornmead	—	1A						
Sheerness, S.D.								
Sheerness Lines	—	1	—	—	—	1	—	Fitter's shop (without lathe).
Garrison Point Fort ...	—	1A	1	—	—	1	—	
Grain Fort...	—	1B	1	—	—	1	1	
Slough Fort	§1	—	—	—	—	1	—	§ Temporary, pending construction workshop.
Barton's Point	§1	—	—	—	—	1	—	
Hoo Fort	—	—	—	—	—	—	—	Dependent upon Darnet Fort.
Darnett Fort	1	—	1	—	—	1	—	

* The G.S. smith's chest (11 A) is supplied to every work, in addition; but without the chest, stocks and dies, Whitworth thread, 1½ in. to ½ in.

A. Workshop (smith's shop with fitter's shop) superadded. B. Smith's shop.

Digitized by Google

Districts and Works.	Field Forge.	Workshop with permanent Forge.	Tools for repair of Ordnance.			Tools for repair of wrought-iron garrison carriages and slides (3 D).*	Tools for repair of wood garrison carriages and slides (4 C).	Remarks.
			Re-venting R.M.L.	Re-coppering B.L.	Special and facing R.B.L.			
SOUTHERN.								
Portsmouth and Gosport.								
Fort Fareham	—	1A	1	1	1	1	1	
,, Brockhurst	—	1B						
,, Grange	—	1B						
,, Monckton	—	1B						
,, Widley	—	1B	1	—	1	1	1	
Hilsea Barracks	—	1B						
Point Battery	—	1B	1	—	1	1	1	
Southsea Castle	1	—						
Horse Sand Fort	—	1A	1	—	—	1	—	
No Man's Land Fort ...	—	1A	1	—	—	1	—	
Spitbank Fort	—	—	—	—	—	—	—	Dependent upon Horse Sand, No Man's Land and Gun Wharf.
St. Helen's Fort	—	—	—	—	—	—	—	
Isle of Wight.								
Puckpool	—	1B	1	—	—	1	1	
Sandown	—	1B						
Yaverland...	—	1A						
Hatherwood	1	—	1	—	—	1	—	
Cliffe End	—	1A						
Warden Point Battery ...	—	—	—	—	—	—	—	Dependent upon Hatherwood.
Hurst Castle	—	1A	1	—	—	1		
Portland.								
Verne Citadel	—	1B	1	—	1	1	1	
East Weir Batteries ...	—	1A						
Western.								
Bovisand	—	1A	1	—	—	1	1	
Breakwater Fort† ...	—	—	—	—	—	—	—	Dependent upon Bovisand.
Fort Agaton	1	—				1	1	Agaton and Ernesettle.
Crown Hill Fort	1	—	1	1	1	1	1	Forts from Knowles to Egg Buckland.
Efford	1	—				1	1	Forts from Forder to Laira Emplacement.
Scraesdon	1	—	1	—	1	1	1	Tregantle, Scraesdon, and movable armament
Picklecombe Fort ...	—	—	—	—	—	—	—	Dependent upon Gun Wharf.
Drakes Island	—	—	—	—	—	—	—	
Maker Heights	—	1B	1	—	—	1	1	
Steep Holme	—	1B	1	—	—	1	—	
Flat Holme	—	1B						
South Hook	—	1A	1	—	—	1	—	
Popton	1	—						
Stack Rock	—	—	—	—	—	—	—	Dependent upon South Hook.
Hubberstone	—	—	—	—	—	—	—	
Breandown Battery ...	1	—	1	—	—	1	—	
St. Catherine's Fort ...	1	—	—	—	—	—	—	

* The G.S. smith's chest (11 A) is supplied to every work, in addition, but without the chest, stocks and dies, Whitworth thread, 1½ in. to ½ in.

† A bench with drawer, and an 80 lb. vice, have been allowed.

A and B, *see* note on page 517.

Digitized by Google

Districts and Works.	Field Forge.	Workshop with permanent Forge.	Tools for repair of Ordnance. Re-venting R.M.L.	Re-coppering B.L.	Special and facing R.B.L.	Tools for repair of wrought-iron garrison carriages and slides (3 D).*	Tools for repair of wood garrison carriages and slides (4 C).	Remarks.
Jersey.								
Fort Regent	—	1B	1	—	—	1	1	
Alderney.								
Fort Albert	—	1B	1	—	—	1	1	
Guernsey	—	—	—	—	—	—	—	Dependent upon Ordnance Workshop.
Cork.								
Carlisle Fort ...	1	—	1	—	1	1	1	
Westmoreland Fort ...	1	—	1	—	1	1	1	
Camden Fort	1	—	1	1	1	1	1	
Gibraltar	6	—	2	—	—	2	2	
Malta	6	—	2	1	2	2	2	
Nova Scotia.								
York Redoubt	1	—						
Ives Point...	—	1B						
Fort Charlotte	—	1B	2	—	—	2	2	
Fort Clarence	1	—						
Citadel	1	—						
Bermuda.								
Fort George	1	—						
,, Hamilton								
,, Prospect	1	—						
,, Langton								
Ireland Island	1	—	3	—	—	3	3	†Dependent upon Ireland Island.
Scaur Hill†	—	—						
Whale Bay Battery ...	1	—						
Fort Victoria	—	1B						
,, Albert								
Alexandra Battery ...	—	1B						
Jamaica.								
Port Royal...	—	1A	1	—	—	1	1	
Salt Pond Battery ...	1	—	—	—	—	1	1	
St. Lucia.								
Castries	—	1A	1‡	—	—	1	—	‡ For Morne Fortune & South of Harbour.
Vigie	1	—	—	—	—	1	—	
Morne Fortune	1	—	—	—	—	1	—	
Mauritius.								
Fort George	—	1B	1	—	—	1	1	
CAPE—*Table Bay.*								
Fort Wynyard	—	1A	1	—	—	1	1	
Craigs Battery	—	1B						

* The G.S. smith's chest (11 A) is supplied to every work, in addition, but without the chest, stocks and dies. Whitworth thread, $1\frac{1}{8}$ in. to $\frac{1}{4}$ in.

A and B *see*, note on page 517.

Digitized by Google

Districts and Works.	Field Forge.	Workshop with permanent Forge.	Tools for repair of Ordnance. Re-venting R.M.L.	Re-coppering B.L.	Special and facing R.B.L.	Tools for repair of wrought-iron garrison carriages and slides (3 D.)*	Tools for repair of wood garrison carriages and slides (4 C).	Remarks.
Simons Bay	—	1A†	1	—	—	1	1	†In most convenient position.
Hong Kong.								
Belchers Battery	—	1A				1		
Stonecutters, West ...	—	1B				1		
Kowloon Dock	1	—	1	1	—	—	1	
Kowloon West	1	—				—		
Lyemun	—	1B				1		
Singapore.								
Fort Connaught (*a*) ...	—	1B						(*a*) A field forge issued to each of these works as a temporary measure pending erection of the workshops.
Seapong								
Siloso	—	1B	1	1	—	1	1	
Passir Panjang (*a*) ...	—	1B						
Tanjong Katong	1	—						
Ceylon	1	—	—	—	—	—	—	

* The G.S. smith's chest (11 A) is supplied to every work, in addition, but without the chest, stocks and dies, Whitworth thread, $1\frac{1}{8}$ in. to $\frac{1}{4}$ in.

A and B, *see* note on page 517.

Tools to be available for repairs by Ordnance Artificers.

175. Although these tools will be accounted for as part of the equipment of the several works to which they are appropriated, they will be considered available at all times for use at any other works in the district where repairs, &c., are to be performed by Ordnance Artificers or other qualified men.

position-finding instruments.

175A. Special tools, instruments, &c., are also allowed to the Instructors in Position-finding to carry out minor repairs and adjustments to the Position-finding instruments (*see* list on page 720*h*).

11.—TARGETS AND SIGNALLING STORES FOR GUN PRACTICE AND INSTRUCTION.

Targets.

Practise over sea ranges.

176. Companies of Artillery will practise over sea ranges at targets of the authorised pattern for this service.

Proportion.

177. Targets are supplied in the proportion of two floating targets to each company of Royal Artillery per annum for practice.

In exceptional cases, however, where not more than two companies of Artillery practise at the same place, or

Digitized by Google

where one company practises at the same place as a Militia Battalion, three floating targets will be allowed for each company. Where only one company practises at a station, 4 targets will be allowed.

Proportions reduced.

178. At localities where practice is carried on by more than one company, it is expected that the proportions herein laid down may be considerably reduced, provided that due attention is paid to repairs.

Targets abroad to be made locally.

179. At stations abroad the targets will be made locally, except under very special circumstances.

Estimate for boats by Officer Commanding R.A.

180. The Officer Commanding the Royal Artillery will furnish annually to the Officer in charge of supplies an approximate estimate of the amount that will be required for the hire of boats for laying and for bringing back the targets, and all boats required for this purpose will be hired by that department.

Targets for instructional purposes.

181. Targets for instructional purposes will be allowed to Garrison Artillery, for instruction in laying guns, at the stations named below, and in the following proportions :—

Belfast	1	Bermuda	2
Thames	3	Cape	2
Cork	4	Ceylon	2
Eastern	2	China	2
Guernsey	2	Straits Settlements	2
Jersey	1	Egypt	2
North British	1	Gibraltar	6
North-Eastern	1	Halifax, N.S.	3
North-Western	1	Malta	8
Shoeburyness	1	Mauritius	1
South-Eastern	3	St. Helena	1
Southern	7	Jamaica	2
Western	5	St. Lucia	1

Materials for instructional targets.

182. The materials required for instructional targets are as follows :—

Chain, $\frac{1}{16}$-in. × 3 ft. 6 in.			1
Hooks, S, iron, $1\frac{1}{2}$-in.			1
Iron, rod, round, $\frac{1}{4}$-in. diameter × 52 in. long			1
Lead, sheet, $\frac{1}{2}$ in. thick, equilateral triangle with 6-in. sides			1
Nails, iron, rose-head, stamped, No. 147		oz.	5
Paint	light green	oz.	12
	red	,,	12
	white	,,	1
Rings, iron, $\frac{1}{4}$-in. × $1\frac{1}{4}$-in. diameter			1
Screws, iron, flathead, $\frac{3}{8}$-in., gauge No. 9			4
Timber, deal	battens, 4 ft. × $4\frac{1}{2}$ in. × $\frac{1}{2}$ in.		4
	boards, 4 ft. × 9 in. × $\frac{1}{2}$ in.		5
	boards, 4 ft. × 3 in. × $\frac{1}{2}$ in.		1

Digitized by Google

Station practice of Garrison Artillery.

183. The Station Practice of Garrison Artillery at the following places will, as far as practicable, be carried out at moving targets, arrangements being made by the Officer Commanding Royal Artillery to secure the services of Government steamers or launches for towing at the stations where these are available. The targets to be employed are, a large target 60 feet long of a special pattern, and a smaller one of no general pattern. The latter will only be used where the large one cannot, from local circumstances be employed, or as a drifting target in combination with the large one, and the annual cost of this, where it may be found necessary, is not to exceed £6 per station.

Stations.	No. of large targets.
Cork	1
South Eastern	1
Thames	1
Southern	2
Western	2
Eastern	1
Bermuda	1
Cape of Good Hope	1
Ceylon (Trincomalee)	1
Gibraltar	1
Halifax, N.S.	1
Hong Kong	1
Jamaica	1
Malta	1
Mauritius	1
Singapore	1
Sierra Leone	1
St. Lucia	1

Targets to be provided locally.

184. The targets will be provided locally through the Ordnance Store Department. The large one in accordance with the approved pattern, a drawing of which is furnished to each station, the small one which after consultation with the Officer Commanding Royal Artillery, to a design which may be considered most suitable to the locality.

Rope for towing.

185. Galvanised steel rope, (400 yards, $\frac{3}{8}$-inch) for towing, will be provided by the Ordnance Store Department. Where this rope is found unsuitable, hemp or coir rope ($2\frac{1}{2}$-inch) may be used instead.

Working pay for manufacture, repair, and accounting for targets.

186. In Garrison Artillery, working pay will be allowed both for the manufacture of, and current repairs to, targets, subject to the instructions contained in Part 1, paragraph 330. Targets for Garrison Artillery will be accounted for in the account of miscellaneous stores at the head-quarters of a district.

Digitized by Google

Targets to be returned.

187. When the Annual Practice at any station is completed, the Officer Commanding the Royal Artillery will return all floating and small towing targets in his possession to store in a serviceable state, and the Ordnance Store Department will arrange for their careful custody until again required. At certain stations, however, where the targets cannot be conveniently returned to store, they may remain in Royal Artillery charge. All targets condemned as unserviceable and beyond repair will also be returned to store.

187A. The large towing targets will also be returned to store in a serviceable condition, if the Royal Artillery have the means of hauling them ashore and repairing them; if not, they will be put in repair by the Ordnance Store Department after their return.

Expenditure of targets, rafts, anchors, and cables.

188. Floating targets and rafts, when shot away at practice, may be written off charge, by a certificate to that effect of the Commanding Officer on the usual expense voucher, Army Form P 1925, but when anchors and cables are lost, the circumstances must be reported upon by a court of inquiry under Part 1, paragraph 76, and War Office authority must be obtained before the corps can be relieved of the charge of the stores.

Floating targets not left out at night.

189. Floating targets are not to be left out at night either before, during, or after practice.

Signalling Stores.

Proportion of flags and poles.

190. Signalling flags and poles as follows will be issued for the use of companies of Artillery, for instruction, and for use at annual practice :—

Flags, signal, army	blue, 2 feet square	1	for each Company.
	white, with stripe, 2 feet square	1	
	Poles, 3 feet 6 inches	2	

These flags and poles will be charged and accounted for in the account of miscellaneous stores at the head-quarters of a district, and issued to companies on inventory.

12.—TEXT BOOKS, HAND BOOKS, AND RANGE TABLES.

Text and hand books.

191. Text books, hand books, and Range Tables are issued in the following proportions, and will be held on charge as laid down in paragraphs 101 to 103 of Part I :—

Digitized by Google

	Distribution.	Text Books, sets.*	Handbooks.	Range Tables.
R.A.	R.A. District Offices	1	3 per nature of ordnance in the district	3 per nature of ordnance in the district.
R.A.	Garrison — Lieut.-Colonels commanding districts	1	**2 per nature of ordnance in the district	2 per nature of ordnance in the district.
R.A.	Garrison — Sub-districts not under a Lieut.-Colonel	1†	1 per nature of ordnance in the sub-district	1 per nature of ordnance in the sub-district.
R.A.	lecture rooms‡	1	1 per nature of ordnance in the service	1 per nature of ordnance in the service.
R.A.	Assistant Gunnery Instructors §	1	1 ditto	1 ditto.
	Forts or batteries	—	1 per nature of ordnance appropriated to or mounted in the work	1 per gun.
Artillery	Lieut.-Colonels Commanding	1	1 per nature of ordnance on charge of Militia and Volunteer Artillery in the sub-district	1 per nature of ordnance on charge of Militia and Volunteer Artillery in the sub-district.
Artillery	Militia — corps headquarters	—	3 per nature of ordnance in possession	3 per nature of ordnance in possession used for practice.
Artillery	Militia — batteries ...	—	1 per gun in possession.	1 for every gun used for practice.
Artillery	Volunteers — corps headquarters	—	3 per nature of ordnance in possession.	3 per nature of ordnance in possession used for practice.
Artillery	Volunteers — batteries ...	—	1 per gun in possession.	1 for every 4 guns used for practice.
	Senior Ordnance Store Officer of a district ¶	1	3 per nature of ordnance in the district	
	Officers of the Staff for the inspection of Warlike Stores	1	1 per nature of ordnance in the service	
	Inspectors of Ordnance Machinery	1	1 per nature of ordnance in the district	
	Armament, Majors, R.A. ...	1	1 per nature of ordnance in the district	1 per nature of ordnance in the district.

* The Text Books referred to comprise the following works:—"Treatise on Ammunition." "Treatise on Military Carriages," "Treatise on the Manufacture of Guns," "Notes on the Manufacture of Gunpowder and Guncotton."

† Where a number of sub-districts are near each other, they will usually be grouped under one command. Text books will then be allowed for each group; individual sub-districts will not be supplied unless they are important and lie distant, so as not to be capable of being included in a group.

‡ For use of the Assistant Gunnery Instructor, but not to exceed one set per district, except in special cases.

§ At stations where there are no lecture rooms. At stations where a lecture com for R.A. exists, books will not be issued to the Assistant Gunnery Instructor, those in the lecture room being available.

¶ At Woolwich Arsenal the allowance will be two sets of Text Books, and three Hand books for each nature of ordnance in the service.

** One copy to be used for instructional purposes where necessary.

N.B.—Hand books for range-finders will be allowed in the same proportion as other Hand books to all the above, except the Militia and Volunteers.

Digitized by Google

13.—MARKING OF ORDNANCE, CARRIAGES, AND ARTILLERY STORES.

For detailed instructions, see Part 1, Section XIII, Sub-section II.

192. The following Tables show the lettering to be carried out for the carriages, wagons, &c., of the Siege Train, Siege Companies, Batteries of Position, and Movable Armaments. Lettering of carriages, wagons, &c.

TABLE 1.

Application of Marks to Carriages, Carts, Wagons, &c., of Siege Train, Siege Companies, and Batteries of Position.

Classes of Carriages, Carts, Wagons, &c.	Nature and Position of Marks.	Examples.
	SIEGE TRAIN.	
Gun or howitzer carriages.	The words "Siege Train," the number of the Division* in the train, the nature of the piece, and its number in the Division, on near side of trail or bracket.	Siege Train, No. 4 Divn.* 6·6-in. R.M.L. Hr. 4.
Limbers and boxes†	The words "Siege Train," the number of the Division in the train, the nature of the piece, and its number in the Division, on rear of bed.	Siege Train, No. 1 Divn., 40-Pr. R.M.L. 1.
	Nature of piece, and its number in the Division on left rear of boxes, close to top.	40-Pr. R.M.L. 1.
Forge and store wagons.	The words "Siege Train," the number of the Division in the train, and number of the wagon in the Division, on near side of perch.	Siege Train, No. 1 Divn. 2.
	The word "Forge" (or "Store"), and the number in the Division on rear of wagon.	Forge. 1.

* Divisions Nos. 1, 2, and 3 are heavy; Nos. 4, 5, and 6 are medium; and Nos. 7, 8, and 9 are light.

† In the case of spare carriages the word "Spare" will be substituted for the numeral of the carriage or limber.

Digitized by Google

TABLE I.—*continued.*

Classes of Carriages, Carts, Wagons, &c.	Nature and Position of Marks.	Examples.
Limbers of forge and store wagons.	The words "Siege Train," the number of the Division in the train, the word "Forge," or "Store," and the number of the wagon in the Division, on rear of bed.	Siege Train, No. 1 Divn. Forge. 2.
	The word "Forge," or "Store," and the number of the wagon in the Division, on the rear of the box.	Forge. 2
Platform wagons ...	The words "Siege Train," and the number of the Division in the train, on front of bed.	Siege Train, No. 1 Divn.
	The word "Gun" (or "Gyn and Stores"), and the number of the wagon in the Division, on rear of bed.	Gun. 2.
Platforms	The words "Siege Train," the number of the Division in the train, and the number of the platform in the Division, on end of platform when packed.	Siege Train, No. 4 Divn. 1.
Trench carts	The words "Siege Train," and the number of the Division in the train, on the front board.	Siege Train, No. 1 Divn.
	The number of the cart in the Division on the tail-board.	2.
Sling wagons and limbers.	The words "Siege Train," the number of the Division in the train, and the number of the wagon in the Division, on near side of the bed of wagon, and on rear of axletree bed of limber.	Siege Train, No. 1 2. Divn.
Ammunition and Store wagons.	The words "Siege Train," and the number of the Division in the train, on the front board.	Siege Train, No. 4 Divn.
	The nature of the ammunition carried, and the number of the wagon in the Division, on the tail-board.	6·6-In. R.M.L. Hr. 2.
Triangle gyns ...	The words "Siege Train," the number of the Division in the train, and the number of the gyn in the Division, on the middle part of prypole.	Siege Train, No. 1 Divn. 2.

Digitized by Google

TABLE 1.—*continued.*

Classes of Carriages, Carts, Wagons, &c.	Nature and Position of Marks.	Examples.
	SIEGE COMPANIES.	
Carriages	The corps marks, the words "Siege Company," and nature of piece, on near side of trail.	28. E.R.A. Siege Company. 40 pr. R.M.L. 8in. R.M.L. Howitzer.
Limbers	The corps marks, the words "Siege Company," and nature of piece, on rear of bed.	Same as for carriages.
Ammunition boxes...	The corps marks, the words "Siege Company," and nature of piece, on left rear of each box, close to top.	Same as for carriages.
Ammunition and Store wagons.	The corps marks, the words "Siege Company," and nature of ammunition carried, on tail-board.	19. S.R.A. Siege Company. 40 pr. } R.M.L. 25 pr. } (1). 8-in. } R.M.L. 6·6-in. } Howr. (2)
Platform wagons ...	The corps marks, the words "Siege Company," and nature of service.	7. W.R.A. Siege Company. Gun. Siege Company. Gyn.
Trench cart	The corps marks, and the words "SiegeCompany,"on tail-board	29. E.R.A, Siege Company.
	BATTERIES OF POSITION.	
Gun carriages ...	Nature of gun and number of sub-division on near side of trail.	40-Pr. R.B.L. 2.
Limbers and boxes ...	Nature of gun and number of sub-division on right rear of bed, and on left rear of each box, close to top.	40-Pr. R.B.L. 2.
	Wagon limber boxes have in addition a "W" on right rear close to top.	W.
Ammunition wagons	Nature of gun and number of sub-division on near side of perch.	40-Pr. R.B.L.
Platform wagons ...	The nature of the gun in the battery in centre of the rear.	40-Pr. R.B.L.

Digitized by Google

TABLE 2.

Application of Marks to Carriages, Carts, and Wagons, of Movable Armaments.

Carriages, Carts, and Wagons.	Nature and Position of Marks.	Examples.
Carriages	Nature of piece on near side of trail.	40-Pr. R.B.L. 16-Pr. R.M.L.
Ammunition and Store wagons.	On front board	"Movable Armament."
Hand carts	On front board	"Movable Armament."
Trench carts	On front board	"Movable Armament."

Digitized by Google

14.—REPAIR AND PRESERVATION OF EQUIPMENT, INCLUDING ARMAMENT OF WORKS

HARNESS AND SADDLERY.

Staff of R.A. Districts.

193. The repair of saddlery allowed for the Staff of Royal Artillery Districts will be effected by the artificers of the nearest battery when practicable.

ORDNANCE, CARRIAGES, SLIDES, PROJECTILES, GAUGES, &c.

Supply of Stores for Care and Preservation of Ordnance, &c.

Reference to the detailed instructions.

194. Detailed instructions for the preservation, painting, inspection, and fitting of ordnance, carriages, slides, projectiles, &c., are given in paragraphs 241 to 636, for the guidance of officers of Artillery in carrying out the services therein referred to, and of Ordnance Store Officers in supplying such materials and stores as may be from time to time required for performing the same.

Stores for preserving ordnance.

195. The proportions of stores allowed annually for the care and preservation of ordnance actually mounted on the defences, including the guns, carriages, slides, sights, elevating screws, side arms, and all stores appertaining to the service of such guns, also grease for plugs of shells, are as laid down in the tables, on pages 530 to 533.

Uses of lubricants.

196. The following are the general properties of, and uses for which, the lubricants in the tables are adapted :—

a. Grease is used as a coating for protecting machinery from rust when not in use. It is also employed for heavy bearings where a thicker consistency than that of oil is desired.

b. Rangoon oil, for oiling metal work when it is necessary to avoid any liability to rancidity, as is the case with some of the fatty oils.

Auxiliary artillery.

197. The foregoing instructions will be observed as far as practicable in connection with the ordnance, carriages, slides, and projectiles, in possession of the Militia and Volunteer Artillery at Home Stations.

Digitized by Google

Stores for the

Articles.	Purpose.	Machine guns. — Proportions.	Quick-firing Ordnance. — Proportions.	Rifled B.L. Proportions. Open works.	Rifled B.L. Proportions. Casemates.
Bricks, Bath ...	General use‡	...	2 to 5 guns	1 to 2 guns	
Cloths, sponge	General use‡	...	7 per gun	9·2 in. and over, 30 per gun...	
				8-in. and under, 26 per gun ...	
Glycerine ...	For preserving packings	...	...	4 lb. per gun on disappearing carriages	
Grease, anti-corrosive	Coating bright parts (4 coats annually) ... guns ...	...	6-pr., 10 oz. per gun ...	13·5-in. to 10-in., 6 oz. per gun	
			3-pr., 4 oz. per gun ...	9·2-in. to 6-in., 4 oz. per gun	
				5-in. and under, 3 oz. per gun	
	mountings	...	...	6-in. and over, 1¾ lb. per gun	
				5-in. and 4 in., ¾ lb. per gun	
Grease, Field's¶	For lubricating fuze-hole plugs	...	...	4 oz. per 100 shells	
	For lubricating gas-check plugs and nuts, Mark II	...	...	... ...	
	For teeth of cog wheels...	...	...	12-in., 7 lb. per gun | 4 lb. per gun 10-in. and 9·2-in. 6 lb. per gun | 3 lb. per gun 8-in. and under, 5 lb. per gun | 3 lb. per gun	
	For lubricating racers ...	...	...	1 lb. per gun**	
	For teeth of gear and turntables	...	...	... ...	
Hemp, undressed	For cleaning bores‡ ...	...	...	... ...	
Linen, old, or cotton waste	For general use with turntables	...	...	... ...	
Linen, old ...	For general use‡... ...	1 lb. per gun	2 lb. to 5 guns	1 lb. per gun	
Oakum ...	For general use‡... ...	...	6 lb. to 5 guns	9·2-in. and over, 3 lb. per gun	
				8-in. and under, 2 lb. per gun	
Oil, olive‖	For lubricating roller paths of turntables	...	...	... ...	
	Preservation of obturating pads	...	...	16·25-in., 5 pts. per gun ...	
				13·5-in. to 12-in., 4 pts. per gun	
				10-in. to 8-in., 3 pts. per gun	
				6-in. and under, 2 pts. per gun	
Oil, paraffin, light	For cleaning off rust ...	...	...	1 gall. per gun | ...	
	For cleaning off clogged oil	½ pt. per gun	½ pt. per gun	1 gallon per gun	

* Excepting 17·72-in. and 16-in., for which special provision is made.
‡ Half of these proportions will be allowed for cleaning and preserving guns, carriages,
‖ To be mixed with the Russian tallow.
¶ Price's composite grease will be used at all stations abroad except British North America.

Digitized by Google

Preservation of Armaments.

rdnance						
R.B.L. Proportions.	R.M.L.* Proportions.		S.B. B.L. 32-pr. Ordnance. — Proportions.	Smooth-bore Ordnance. — Proportions.	Siege Companies and Movable Armaments†† — Proportions.	Position-Finders, Artillery. — Proportions.
pen rks. Casemates.	Open works.	Casemates.				
to 4 guns ...	1 to 4 guns		1 to 4 guns	1 to 15 pieces.	1 per piece.	
4 per gun ...	4 per gun		4 per gun ...	1 to 8 pieces.	4 per piece.	
... ...	... ...		...	... ...		
7-in., 4 oz. per gun						
40-pr. and under 3 oz. per gun	...	...		... ...	4 ozs. per piece.	
7-in. ¾ lb. per gun						
40-pr. and 20-pr., 6 oz. per gun ...	7-in. and over, 1¾ lb. per gun		3 oz. per gun			
12-pr. and under, 4 oz. per gun ...	80-pr. and under, on wrought iron mounting, ¾ lb. per gun					
oz. per 100 shells	4 oz. per 100 shells		...	4 oz. per 100 shells.		
... ...	14 oz. per 100 shells		...	... ...		
	12·5-in. and 12-in. 35 tons, 7 lb. per gun ... | 4 lb. per gun 12-in. 25 tons to 10 in., 6 lb. per gun ... | 3 lb. per gun					
7-in. on Moncrieff carriage, 5 lb. per gun	9-in. on traversing slides, 5 lb. per gun ... | 3 lb. per gun		...	... ...	2 lbs. per piece.	
	9-in. on Moncrieff carriage, 6 lb. per gun ... | ...					
	7-in. and 64 pr. on Moncrieff carriage, 5 lb. per gun ... | ...					
... ...	1 lb. per gun**		...	1 lb. per 13-in. S.S. mortar.		
... ...	2 cwt. per gun mounted on turntable		...	... ...		
3 lb. per gun ...	... ...		...	... ...		
... ...	28 lb. per gun, mounted on turntable		...	... ...		
3 lb. per 5 guns	3 lb. per 5 guns		2 lb. per 5 guns	1 lb. to 8 pieces	1 lb. per piece	4 lb. per instrument.
1½ lb. per 5 guns	1½ lb. per 5 guns		...	1 lb. to 15 pieces	1½ lbs. per 5 pieces.	
... ...	10 gallons per gun mounted on turntable		...	... ...		
... ...	... ...		...	... ...		
1 gall. per Moncrieff carriage	1 gall. per 9-in. and upwards, or Moncrieff	...	...	... ...	2 pints per carriage.	
1 gall. per Moncrieff carriage	1 gall. per 9-in. and upwards, or Moncrieff		...	... ...	2 pints per carriage.	
	2 gallons per gun, mounted on turntables					

† Consisting of 40-pr. and 25-pr. R.M.L. guns, and 8-in. and 6·6-in. R.M.L. howitzers. lides, &c., dismounted, in Royal Artillery charge.

‹ Exclusive of guns used for drill.

** Mounted on slides having traversing racks.

Digitized by Google

Articles.	Purpose.	Machine guns. — Proportions.	Quick-firing Ordnance. — Proportions.	Rifled B.L. Proportions. Open works.	Rifled B.L. Proportions. Casemates.
Oil, Rangoon	For cleaning bright parts, &c.	...	1 qt. per gun	9·2-in. and over ... ‡8 qts. per gun...	9·2-in. and over ... §6 qts. per gun...
				8-in. and under ... ‡5 qts. per gun...	8-in. and under ... §4 qts. per gun...
	For lubricating the axles and bearings of the trucks and rollers, and also for the shafts and bearings connected with the elevating and traversing gears (25 per cent. more allowed to Halifax, N.S.)	...	...	12-in., 6 qts. per gun ... ... 9.2-in. and 10-in. 3 qts. per gun | 2 qts. per gun 8-in. and 6-in. 2 qts. per gun | 1½ qts. per gun Guns on disappearing carriages, 4 qts. per gun ... Lighter natures on traversing slide, 1 pt. per gun	
	For lubricating bearings of turntables	...	...	... ...	
	For oiling all parts of guns and mountings.	½ pt. per gun	...	... ...	
Potash, American	For removing lacquer from bores of guns.	...	1 lb. per gun	13·5-in. and 12-in., 6 lb. per gun ... ... 10-in. and 9·2 in., 3 lb. per gun ... ... 8-in. and under, 2 lb. per gun	
Soap, soft ...	General use¶	...	2 lbs. to 5 guns	6 lb. per 5 guns	
Soda	For washing fired cartridge cases	...	As required††	... ...	
Tallow, Russian **	For pivot plugs and holes of pivot plugs	...	...	1½ lb. per pivot plug ...	
	Preservation of obturating pads	...	...	16·25 in., 5 lb. per gun ... 13·5-in. to 12-in., 4 lb. per gun 10-in. to 8-in., 3 lb. per gun ... 6-in. and under, 2 lb. per gun	
Cotton waste, white	For cleaning bright parts	...	...	3 lb. per gun on disappearing carriages.	
	For wiping oil off slides before practice, &c.	...	...	3 lb. per gun, except guns on disappearing carriages.	
Oil for instruments	General use	...	...	... ...	

* Excepting 17·72 in. and 16-in., for which special provision is made.
‡ Guns in use for drill.
‖ These quantities will also suffice for loading stages.
¶ Half of these proportions will be allowed for cleaning and preserving guns, carriages, slides, &c., dismounted, in Royal Artillery charge.
** To be mixed with the olive oil. †† *See* foot-notes on pages 795 and 804.

Digitized by Google

Ordnance.							
R.B.L. Proportions.		R.M.L.* Proportions.		S.B. B.L. 32-pr. Ordnance. — Proportions.	Smooth-bore Ordnance. — Proportions.	Siege Companies and Movable Armaments† — Proportions.	Position-Finders, Artillery. — Proportions.
...en ...ks.	Casemates.	Open Works.	Casemates.				
		7-in. and over, 2 pts. per gun, | 1½ pts. per gun 80-pr. and under, including 64-pr. on depression carriage, 1½ pts. per gun | 8-in., 6·6-in., and 6·3-in. howitzers 1½ pts. per howz |		...	1 pt. to 8 pieces.	1 quart per piece.	
...½ pts. per ...gun ... ...1½ pts. per ...gun ...				...	... ...		
...guns on traversing slide or Moncrieff carriage, 1 pt. per gun.		12·5-in. to 12-in. 35 tons, 4 qts. per gun | 3 qts. per gun 12-in. 25 tons to 10-in., 3 qts. per gun | 2 qts. per gun 9-in., 2 qts. per gun | 1½ pts. per gun 7-in., 1 qt. per gun ... ... Lighter natures on traversing slide, or Moncrieff carriage, also 64-pr. depression carriage, 1 pt. per gun		2 pints per gun.	Guns on traversing slide, 1 pt. per gun.§		
... ...		20 gallons per gun mounted on turntable		...	... ...		
... ...		... ...		...	... ...		
...'-in., 2 lb. per gun ... ...40-pr. and under, 1½ lb. per gun.		12·5 in. and 12-in., 5 lb. per gun ... ... 11-in. and 10-in., 4 lb. per gun 9-in. and 8 in., 2 lb. per gun ... 7-in. and under, 1½ lb. per gun		...	Carronades, 1 lb. per piece. 68-pr. to 32-pr., 2 lb. per piece. 24-pr. and under, including howitzers and mortars, 1 lb. per piece.	1 lb. per piece.	
...3 lb. per 5 guns		3 lb. per 5 guns		2 lb. per 5 guns	1 lb. per 8 pieces.	2 lbs. per piece.	
...lb. ...er ...vot ...lug		1½ lb. per pivot plug for heavy ordnance, 1 lb. per pivot plug for medium ordnance		...	... ...		
... ..		.. ..		...	... ...		
... ...		... ...		...	... ...		
... ...		3 lb. per gun mounted on slides, with hydraulic buffers.					
... ...		... ...		...	... ...	... ...	1 pint per instrument.

† Consisting of 40-pr. and 25-pr. R.M.L. guns, and 8-in. and 6·6-in. R.M.L. howitzers.
§ Guns not in use for drill.

Digitized by Google

Extra articles.

198. Should other articles not mentioned in the table be exceptionally required in certain cases, such articles will be supplied to Officers Commanding Royal Artillery on special demand, the purpose for which they are required being clearly stated in the requisition. Woollen rags and dressed flax will not be allowed.

Removal of rust.

198A. Emery should on no account be used on ordnance machinery. Rust should first be loosened by coating the part affected with paraffin, and then rubbed off with cotton waste, and the part smoothed with bath brick.

Special issues on first receipt from store.

199. Officers in Command of Royal Artillery Districts may also demand, on the receipt from store of rifled ordnance, carriages, and slides, requiring to be specially cleaned and lubricated when first mounted on the defences, an additional supply of bath bricks, grease, hemp, and oil, in such quantities, not exceeding one-half the annual proportion, as may be absolutely requisite. Less than one bath brick need not be demanded.

Increased allowance for special positions.

200. In certain positions, such as those of the sea batteries at Portsmouth, where the armament is much exposed, the annual proportions of grease and oil may be increased 10 per cent., if necessary.

Lubricants for wheels, gyns, &c.

201. In addition to the above, the following proportions of lubricants will be allowed annually for use with wheels, gyns, shell lifts, landing gear, &c., and for preservation of straps and leather work for travelling carriages forming part of the armament of Districts or Reserves :—

Dubbing	7-pr. R.M.L. battery, without wagons, ½ lb. per gun	For straps and leather work.
	Other batteries ... { ,, ,, 1 ,, ,, with ,, 1½ ,, ,,	
	½ lb. per 13-inch S.S. mortar, for leather work.	
	1 lb. per magazine leather hide.	
	1 lb. per 25 pairs of magazine boot or shoes.	
	1 lb. per 100 leather straps, of sorts.	
Grease, Field's*	3 lbs. per wheel of wagons and carts...	On certificate of Commandg. Officer that they are in constant use.
	½ lb. ditto ditto	When not in constant use.
	4 lbs. per set of light gear for landing carriages, &c, at sea forts.	
	10 lbs. per rope mantlet.	
	8 ozs. each for three or less winches	For shell lifts.
	6 ozs. each if over 3 and not exceeding 6 winches...	
	4 ozs. ,, 6 ,, ,, 12 ,, ...	
Oil, Rangoon	1 quart per gyn, crab, or windlass.	
	2 quarts per set of light gear for landing carriages, &c., at sea forts.	
	2 pints each for 3 or less winches	For shell lifts.
	1½ pints each if over 3 and not exceeding 6 winches	
	1 pint ,, 6 ,, ,, 12 ,,	
Soap, soft—S.B. batteries 1 lb. per gun		For straps an leather work.

* Price's composite grease will be used in place of Field's grease at all stations abroad other than British North America.

Digitized by Google

Turpentine, spirits of—½ pint for every 5 lamps or lanterns	On certificate of Commandg. Officer that they are in constant use.
Whiting, fine—2 lb. for every 5 lamps or lanterns ...	

Paint, supplied ready for use.

202. The paint required for painting armaments is supplied to the Royal Artillery on demand "prepared ready for use." In order, however, to ensure as far as possible that paint may always be in good condition, it will not be drawn from store in larger quantities than are required for immediate use.

No driers or thinnings required.

203. As all paint is issued prepared and ready for use, no driers are required. Linseed oil for thinning the paint should, for the same reason, be unnecessary, if the paint is properly stirred up before use.

Descriptions of paint to be used.

204. Paint for painting the exterior of all iron ordnance, guns, carriages, and slides forming the armament of works, will be of the description and colour authorised for the works at the several stations at home and abroad. For other stores, and where colour painting is not authorised, the paints described in Tables C, D, G, and I (pages 622, 623, 627 to 629 and 634 to 641) will be used.

Stores for browning guns.

205. The details of the ingredients and stores allowed for browning 16-pr., 13-pr. and 9-pr. R.M.L. guns, and 6-pr. and 3-pr. Q.F. guns are laid down in Table E, page 624.

Time, working pay, materials and tools for painting.

206. Tables showing the time, working pay, and quantities of material allowed for cleaning, painting, examining, &c., ordnance, carriages, slides, and other stores, together with lists of the tools required for those services, are printed in the Tables in section 16, sub-section XXII., pages 616 to 651.

Prices for piecework.

207. The prices given in these tables are for piecework; the time being added for general guidance in the due performance of the services.

Working pay list.

208. The form of working pay list, Army Form O 1677, will be used for the services to which the tables relate, and will show the various articles in detail, and the sequence in which they appear in the tables.

Superintending N.C.O. not to receive any pay for piecework.

209. The Non-Commissioned Officer superintending a working party will not be entitled to any portion of the amount paid for piecework to the party. His duty will be to see that the work is properly performed, and to keep an accurate account of the work done by each man, with a view to the apportionment of the amount earned among the working party.

Strength of party.

210. Parties of 8 or 10 men will generally be found the most convenient numbers for the proper performance of

Digitized by Google

the duty, and sufficient for a Non-Commissioned Officer effectively to superintend.

Master gunners; when not to receive working pay.

211. Master Gunners are not entitled to working pay while superintending working parties employed in cleaning, painting, or lacquering ordnance; such superintendence being part of their ordinary duties.

Materials and labour from local tradesmen.

212. At stations where military labour is not readily available, and when it would be more economical to obtain the materials and labour from local tradesmen, the Officer Commanding the Royal Artillery will follow the course laid down in paragraph 330, Part I.

Supply of Gauges for Projectiles.

M.L. projectiles. Stations of inspection.

213. For R.M.L. Projectiles.—Stations of inspection will be supplied as may be required with ring gauges, body and gas checks, and with cylinder gauges (or ring gauges, body and studs, if cylinder gauges are not available), and ring gauge, low over studs.

B.L. projectiles.

214. For B.L. and R.B.L. Projectiles.—Stations of Inspection, Garrison Artillery, and the Ordnance Store Department will be supplied, as may be required, with high gauges, and Stations of Inspection will also be supplied with low gauges.

215. Stations of Inspection, Garrison Artillery, and Ordnance Store Department will also be supplied with chamber gauges for 6-pr. and 3-pr. quick-firing ammunition.

O.S.D. and Garrison Artillery.

216. The Ordnance Store Department, and Garrison Artillery, will be supplied as may be required with ring gauges, body and gas check, and ring gauges, body and studs, only; they will not be supplied with ring gauges, low over studs.

S.B. projectiles.

217. For S.B. Projectiles.—High gauges and low gauges (wrought-iron), will be supplied as may be required, the issue of the low gauges being restricted to Stations of Inspection.

High gauges.

218. The dimensions of the high gauges for R.M.L. projectiles are slightly in excess of those of the standard gauges by which the projectiles are received into the Service; they, as well as all other high gauges, are issued for the purpose of indicating what projectiles are or are not fit for issue, or, if issued, whether from the studs, rings, or coating of the projectiles having been bruised, or from the bodies having been thickened by rust or paint,

Digitized by Google

they are still within such limits as will admit of their being properly loaded and rammed home.

219. Any gauges of proper dimensions, though not exactly of the present service pattern, will be retained for general use as long as they are serviceable. Other gauges.

15.—INSTRUCTIONS FOR KEEPING THE STORE ACCOUNTS IN ROYAL ARTILLERY DISTRICTS AND OF THE ESTABLISHMENTS ENUMERATED IN PARAGRAPH 237.

220. The "Instructions for Keeping Regimental and Staff Equipment Ledgers," contained in Part I, Appendix I, pages 92 to 95, being generally applicable, except as hereinafter modified, to Royal Artillery Store Accounts, will be attended to by all who are concerned in keeping these accounts. Instructions for keeping Equipment Ledgers to generally apply.

221. The Officer in charge of an Armament Sub-District, or the Officer Commanding a Militia or Volunteer Corps, is the Accountant (*see* Part I, page IV, Definitions) for all armament or artillery stores in his charge. Accountant.

222. The Store Account records to be kept in each Royal Artillery District will be rendered on Army Form G 908A, for every work, or group of works, having an authorised armament or equipment, and comprising the unit of charge of a Master Gunner or other N.C. Officer; and for stores for moving, mounting and examining ordnance, &c., and on Army Form G 885, for all miscellaneous stores not forming part of such authorised armament or equipment in possession of any officer, *e.g.*, stores for drill and instruction. Store account records.

223. The accounts on Army Form G 908A will show the quantities in possession on the date of opening, the receipts and the issues, and the balances remaining on the date of closing the accounts, of all stores which should be recorded therein. Scope of accounts.

224. Except as mentioned in paragraph 225, gas checks will not be considered as components of the projectiles with which such gas checks are used, and will be separately demanded, charged and accounted for. Gas checks, demands for.

225. The gas checks for 13-pr., 15-pr., 2·5-inch guns, and 4-inch howitzer shells being permanently attached to those projectiles, are held to be components of the shells and not separate articles of store, and will not be separately demanded, charged and accounted for. Gas checks, components of projectiles.

226. Fuze hole plugs will in all cases be demanded, charged, and accounted for, as separate articles of supply. Plugs, fuze hole, demands for,

Digitized by Google

Expendible stores not to be shown.

227. Materials for repair and preservation of armament or equipment, as well as all stores drawn periodically for expenditure, will not be taken on charge in the accounts. The requisitions for the supply of these stores will show any quantities remaining on hand, and will bear a certificate that the quantities expended of the preceding supply were duly applied.

Models, &c., not to be shown in the accounts.

228. Models, specimens, sections of shells, fuzes, &c., for instructional purposes will not be shown in the accounts, but accurate lists of such articles will be kept in the instruction rooms and district office, and they will be dealt with in the same way as lithographs, official books, printed records, and maps, under paragraph 102, Part 1.

Keeping accounts.

229. The Master Gunner or Non-Commissioned Officer in charge of stores in a work will keep the Store Accounts under the orders of the officer or accountant in charge of the Armament Sub-District, who alone will be responsible for any loss that may occur, and will, when each of the accounts in his sub-district is balanced on the 31st of March of each year, check, sign, and transmit one copy to the Accountant-General, War Office. Each account will be accompanied by the vouchers referred to in the transactions recorded in it. A duplicate copy of each account will be retained in the work to which it refers. Each voucher will be signed by the Accountant, and the date of entry in the account will be noted on it.

Correspondence in connection with equipment.

230. The Accountants will correspond direct with the Ordnance Store Department on all matters connected with demands, requisitions, and questions concerning stores forming part of their authorized equipments, except in cases of condemnation, or loss of stores, when the circumstances will be reported to the Officer Commanding Royal Artillery in the District, and the instructions contained in paragraphs 69 to 81 of Equipment Regulations, 1890, Part I, will be followed. Correspondence connected with any proposed addition to, or reduction of the authorized equipments should be addressed by the Accountant concerned to the Lieutenant-Colonel Commanding, for submission to the Officer Commanding Royal Artillery and General Officer Commanding.

Demands for stores.

231. Demands for stores, and the issues in discharge of such demands will be made for each separate account.

Stores for drill and instruction, &c.

232. Stores for drill and instruction, &c., not forming part of the armament or equipment of any work, will be shown on returns on Army Form G 885, as directed in paragraph 222. The instructions in paragraph 229 will apply to these forms. The forms referring to stores in Royal Artillery charge will be rendered direct to the

Digitized by Google

Accountant-General, War Office, by the Accountant in whose sub-district the stores are kept, and the forms referring to stores in charge of a Militia or Volunteer Corps will be rendered direct to the Accountant-General, War Office, by the Officer Commanding the Corps.

Transfer of charge.

233. Upon the transfer of charge from one accountant to another, a verification of stock, by a board of officers need not be made, unless at the request of either the officer handing over, or the one taking over charge, as laid down in Part I, paragraph 10.

Stores for experimental purposes, &c.

234. Stores issued to Royal Artillery Districts for experimental purposes, or for proof of mountings, will be at once taken on charge and accounted for in Army Form G 908A; such stores will be kept distinct from other stores forming the armament of any work or position.

Certificate of ammunition, cleaning materials, &c., demanded and expended.

235. Accountants in charge of Armament Sub-Districts, and Officers Commanding Militia and Volunteer Corps, will furnish with the Store Accounts rendered by them, a certificate that only the authorized proportions of ammunition, cleaning material, &c., have been demanded for, and expended in, their respective charges.

Transfer and conversion vouchers.

236. Transfer and conversion vouchers will only be used in cases of absolute necessity, such as when converting "empty" cartridges, shells, &c., for armament purposes to "filled," and *vice versâ*.

Stations where special form of accounts are kept.

237. At each of the undermentioned stations accounts will be prepared in manuscript, on Army Book 209A, or 209B, C, or E (as may be found necessary).

Shoeburyness School of Gunnery.

Woolwich { Royal Artillery District Staff. / Royal Military Academy. / Royal Military Repository.

Accounts to be accompanied by balance sheets.

238. These accounts, when transmitted to the War Office, will be accompanied by balance sheets, which will be exact transcripts of the remain as shown in the ledgers, and should agree with the quantities actually in possession on the 31st March in each year.

Method of keeping special accounts.

239. The instructions for keeping the store accounts of works or positions do not apply to the stations specified in paragraph 237. All stores received in or issued from these stations will be accounted for in the ledgers, except that the ledgers of the Royal Military Repository will show only those stores which are to be accounted for in the accounts of works or positions.

Agreements with vocabulary of stor and actual issues.

240. Great care is to be taken in all accounts that the stores are described in exact accordance with the Vocabulary of Stores in force for the time being, and further

Digitized by Google

that the descriptions, numbers, and quantities shown in vouchers and ledgers agree in all respects with the stores actually received, issued, and held on charge.

Half-yearly returns of gunpowder.

240A. The half-yearly returns of gunpowder on charge (Army Form G 865), and gunpowder expended (Army Form G 862), will be prepared by the Armament Major, or other Officer in charge of an Armament Sub-District, and forwarded to the Officer Commanding Royal Artillery of the District, who will cause a consolidated return to be compiled from these several Sub-District returns, and forwarded to the Ordnance Store Officer of the District for transmisson to Purfleet.

16.—INSTRUCTIONS FOR THE PRESERVATION INSPECTION, AND FITTING OF ORDNANCE, CARRIAGES, ROPE MANTLETS, LIFTING JACKS, PROJECTILES, &c.

I.—Ordnance, Carriages, Slides, &c., generally.
II.—Care and Preservation of Ordnance and their Fittings.
III.—Regulations for the Inspection of Ordnance.
IV.—Rules for Furnishing Annual Returns.
V.—Instructions for Removing and Replacing Axial Vents for R.M.L. Guns.
VI.—Instructions for Re-filling Graduations in Elevating Arcs, and Traversing Arcs.
VII.—Carriages.
VIII.—Carriages for Medium Guns.
IX.—Siege Travelling Carriages.
X.—Slides, L.
XI.—Slides, L., for Medium Guns.
XII.—Beds for Howitzers.
XIII.—B.L. Gun Mountings.
XIV.—Care and Preservation of Carriages and Slides, L.
XV.—Instructions for the Erection, Working, and Preservation of Disappearing Mountings.
XVI.—Turntables for Heavy Guns, and Machinery for Mounting and Working Heavy Guns in Sea Forts.
XVII.—Rope Mantlets.
XVIII.—Hydraulic Lifting Jack, Tangye's pattern.
XIX.—Hydraulic Lifting Jack, G.S. pattern.
XX.—Projectiles.
XXI.—Winches and Chains Fitted in Shell Lifts.
XXII.—Tables of Tools, Time, Working Pay, and Materials, for Scraping and Painting Ordnance, &c.

Digitized by Google

I.—ORDNANCE, CARRIAGES, SLIDES, &c., GENERALLY.

Tools for repairing armaments.

241. Tools for the repair of ordnance, as also for wrought-iron garrison carriages and slides, are allowed to all stations as detailed in paragraph 174. They will be in the charge of the Officer Commanding Royal Artillery at the station, and will be maintained in serviceable condition, and be available for use by ordnance artificers when required, for carrying out the repairs, &c.

Armament of fortresses cleaned and painted biennially

242. All ordnance, carriages, slides, and stores connected therewith, forming the armament of fortresses, and projectiles exposed to the weather, will be cleaned and painted biennially; but should it be found on inspection that when mounted on the sea faces of works they are in a bad state from exposure to the spray of the sea, or when in casemates from the damp and dripping, they will be cleaned and painted every year, and oftener if considered necessary by the Officer Commanding Royal Artillery; on this point, considered as a question of expense, a sound discretion will be exercised.

Oftener if necessary.

Examination of gun mountings.

243. Before the periodical painting of ordnance, carriages, and slides, the Officer in immediate charge of the guns will apply for the services of the Ordnance Artificers to examine and thoroughly overhaul the gun mountings. This examination will be carried out under the Inspector of Ordnance Machinery when there is one in the district.

II.—CARE AND PRESERVATION OF ORDNANCE AND THEIR FITTINGS.

1. General Instructions.

Ordnance to be painted externally and lacquered internally.

244. All ordnance, whether breech-loading or muzzle-loading, will be kept in good preservation, the exterior being protected from the effects of the atmosphere by a sufficient coating of paint, and the bore by being lacquered when not in constant use, or by being well cleaned and oiled during practice.

Smaller natures of rifled guns to be browned.

245. Rifled guns of less calibre than 4-inch (excepting the 20-pr. R.B.L.) and quick-firing guns, will not be painted, however, but will be protected by browning the exterior, and keeping the bore cleaned and oiled.

Browning.

246. Guns in charge of the Artillery having no regimentally paid artificers, will be browned by the Ordnance Store Department. The browning will be expected to last two years. If it should fail to last that period the circumstances will be specially represented. Instructions for browning will be found in the Treatise on the Manufacture of Guns.

Digitized by Google

Ordnance to be dismounted.

247. Before the working parties commence work, the ordnance will be dismounted and placed on skidding, in such a position as to admit of the exterior and interior of the piece being thoroughly well cleaned.

Or raised out of trunnion holes.

248. In cases where, from the nature or position of the work, it may not be deemed advisable to dismount the pieces, they will be raised out of their trunnion holes to a sufficient height to admit of all parts of the gun being thoroughly scraped and cleaned.

Dismounting, &c., to be performed by the Royal Artillery.

249. Dismounting, placing on skidding, raising out of trunnion holes, and mounting ordnance in charge of the Royal Artillery, form part of the duties of Artillery soldiers, for which working pay is not allowed, and should, when practicable, be performed independently of the working parties.

Ordnance prepared for painting.

250. Ordnance will be scraped on the exterior (the scrapers or old swords supplied for the purpose being previously sharpened) until the old paint and all rust which may appear beneath it are entirely removed; the sight notches and all marks will be completely cleaned out and rendered distinct, and the ordnance will afterwards be wiped over with a piece of old canvas or cloth.

Vents.

251. The radial copper vents will be cleaned with the vent-scrapers.

Process of painting.

252. The exterior of the piece will be painted with two coats of paint; the second coat will not be applied until the first coat has thoroughly set, and as, in the process of mounting the ordnance, the paint gets much rubbed, the second coat should be given, when possible, after the piece has been mounted.

Colouring of guns and mountings.

253. Guns and mountings will, where necessary, be painted in colour to harmonise with the surroundings of the work (which will be similarly painted), with the view to lessening their visibility.

Paint, tools, and working pay.

254. The paint to be used will be in accordance with the description approved for the several stations and works. The proportions for each piece are shown in Tables C and D, pages 622 and 623, and the necessary tools for painting in Tables A and B, pages 616 to 620. The time and working pay allowed for scraping, cleaning, and painting are stated in Table F, pages 625 and 626.

Preservation of bores.

255. The bores of all ordnance, when not in use, will be lacquered;* but when in frequent use they will be kept clean and slightly oiled instead. At the close of each

* The lacquer consists of—

Lead	black	24 lb. 8 oz.
	red	6 „ 12 „
Lamp black		12 „
Oil, linseed, raw		9 gallons.

Digitized by Google

day's practice they will accordingly be washed and placed under metal and as soon as dry will be oiled with a greasy sponge (a sponge cloth tied over the piasaba brush), and the muzzles closed with tampeons or caps. When the practice for the year is over, the bores will be lacquered, the vents plugged, and the bright parts about the breech of B.L. and R.B.L. guns dealt with as directed in paragraph 264, and the breech screws, vent-pieces and all other fittings, as directed in paragraph 265. The lacquer can be removed in a few minutes by brushing the bore with hot potash solution. The proportions of lacquer are given in Tables C and D, pages 622 and 623. The lacquer will be applied by means of brushes attached to holders (*see* Tables A and B, pages 616 to 620); one to lacquer the sides of the bore, the other the end of the bore. Lacquering bores.

256. It is the duty of the Royal Artillery to keep in perfect order the bores of all ordnance in their charge, and working pay is not granted for this service. Royal Artillery to keep bores of guns in order.

257. In the case of 64-pr. converted guns of 71 cwt., the pin which secures the movable block of the breeching loop in its place should be kept in good order, and at times taken out to prevent its getting fixed by rust, as in the case of these guns being transferred to sea service it will be necessary to remove the block for the purpose of inserting the breeching rope. Pin of breeching loop block.

258. In the case of ordnance having gas escape channels, the latter will always be kept clear, the outer ends being merely stopped with plugs of greased tow when the guns are not in use. Gas escape channels to be kept clear

2. Preservation of Sights.

259. When mounted in exposed positions, all the sights (except screw pattern fore-sights of R.B.L. guns) will be removed from the ordnance and kept in store, the sight recesses in the guns being filled with a plug of greased tow to keep out the rain and dirt. These plugs can be readily removed when it is required to fit the sights to the ordnance. Particular attention will be paid to the prevention of rust or grit accumulating in the sight recesses. Sights to be removed from ordnance in exposed positions.

260. The reflecting sights used with ordnance mounted on Moncrieff carriages being liable to become unserviceable by exposure to damp, will, when not in use, be covered with the covers, sight, reflecting, allowed for the purpose. Reflecting sights.

261. The set-screw for clamping the centre hind-sight, not being removable from the socket, will be tested to see that it works freely. Set-screw to be tested.

262. The sights themselves will be kept clean free from Sights to be kept clean.

Digitized by Google

grit, and oiled; the sliding leaf, as well as the collars of the fore-sights, should have free play.

Sights not to be polished.

263. The exposed portions of the sights of rifled ordnance are bronzed if made of gunmetal, and blued if of steel, in order to preserve them from corrosion, and on no account will these parts be cleaned or burnished in such a manner as to remove the bronzing or blueing. The screw pattern fore-sights of 7-inch R.B.L. guns will be kept painted. In the case of sights for S.B. ordnance, the fore-sight is kept painted as well as the block which is used with the hind-sight on guns and carronades. The tangent scale sights are kept clean and oiled, and should on no account be polished. The sights of guns will be removed, and the holes plugged with wood, before the operation of browning (*see* paragraph 245) is commenced.

3. Preservation of Fittings.

Fittings of B.L. guns to be coated; or removed.

264. The breech-screw and bright parts of B.L. and the mechanism of quick-firing guns in store, or mounted where rarely or never used, will be coated with the composition detailed for that purpose in the table at page 530.

265. When R.B.L. guns are not in use, the vent-piece, breech-block, and all the fittings, except the breech-screw and elevating plates, will be removed and laid up in store. In the case of B.L. guns all fittings excepting the bronze frame will be removed.

Muzzles and vents to be stopped.

266. The muzzles of guns and howitzers—as also the breech end of the bores of R.B.L. guns—will be stopped with tampeons, and those of mortars when in use (mortars not in use do not require caps, as they can be laid horizontally with the coins removed) covered with caps to keep out moisture; and vent plugs will be used with mounted R.B.L. and R.M.L. ordnance.

And depressed at muzzle.

267. Ordnance, whether mounted or lying on skidding, will be depressed at the muzzle to prevent rain or moisture lodging inside.

Elevating plates.

268. Elevating plates will be removed for transport, and the holes in the gun filled with preserving screws.

Lanyard guides. When removed.

269. All garrison ordnance are furnished with lanyard guides to overcome the tendency of the tubes to be partially pulled out of the vent. When the guns are not in use the lanyard guide will be removed, and the hole filled up with a preserving screw.

Preserving screws.

270. Guns fitted for land service have the friction tube pin holes filled by preserving screws, which should be occasionally removed and oiled to prevent their becoming fixed by rust.

Fixing screws.

271. All fixing screws should be occasionally removed and oiled.

Digitized by Google

4. Transport.

Transport.

272. In preparing ordnance for transport, the sights (except fore-sights of 16-pr. R.M.L. guns), together with all fittings which would project beyond the surface of the ordnance, and be liable to injury during transport, will be removed, and the holes filled either with preserving screws or with tow and tallow.

16-prs. in possession of R.A.

273. In the case of 16-pr. R.M.L. guns the fore-sights will be covered with tallow, and protected by the wood packing-block issued with the guns from the Royal Gun Factory. This block extends across the trunnions, and protects both fore-sights, and will be kept on charge for transport purposes.

Land transport of smaller natures.

274. For land transport the smaller natures of guns are packed in boxes. Ordnance of greater calibre than 20-prs. will have no such protection.

III.—REGULATIONS FOR THE INSPECTION OF ORDNANCE.

1. General Instructions.

Final condemnation.

275. Ordnance must be frequently examined at out-stations; but as it requires great practice and experience in order to become a competent judge of the various conditions of all the different natures of ordnance in the service, final condemnation will be pronounced only by the Director of Artillery (Woolwich).

Provisional condemnation.

276. In all cases, however, where there are sufficiently serious defects, or if there be any doubt as to the serviceable state of the piece, it must be provisionally condemned, pending the decision of the Director of Artillery (Woolwich).

Period of service at which examination is to take place.

277. All ordnance (including that in charge of the various Corporations and other public bodies in the United Kingdom, whether used for time or signal purposes)* will, as far as possible, be examined regularly after the following numbers of rounds, and practice from such ordnance should cease until such examination takes place :—

Natures.	Number of Rounds with Projectiles.
Rifled.	
B.L. (including Q.F. guns)—	
12-inch and upwards	32
Below 12-inch to 8-inch	50
„ 8-inch to 4-inch	100
„ 4-inch	150

* General Officers Commanding will take steps for communicating these instructions to the officials concerned. The guns in charge of Irish Lights Commissioners, Board of Trade, Trinity Board, Cork Harbour Commissioners, and National Life Boat Institution are specially arranged for.

Digitized by Google

Natures.	Number of Rounds with Projectiles.
Rifled—continued.	
R.B.L.—	
7-inch	100
40-pr. and under	150
R.M.L.—	
Guns { 12-inch 35 tons and upwards	32
Guns { 9-inch to 12-inch 25 tons	50
Guns { 8-inch to 64-pr.	100
Guns { 40-pr. and under (except 13-pr.)	150
Guns { 13-pr.	100
Howitzers { 8-inch and upwards	100
Howitzers { 6·6-inch and under	150
Jointed R.M.L. 2·5-inch	150
Smooth-bore.	
Pieces firing 10-lb. charges and upwards....	100
„ „ charges under 10 lbs.	200

Ordnance firing blank charges.

278. All ordnance used for saluting purposes, or for any purpose in which blank charges only are employed, will be examined at least once a year (even if no rounds have been fired from them) or oftener, if necessary.

Special cases.

279. In all cases, however, should there be any appearance of fissures about the vent (*see* paragraph 332 (*e*)) or defects likely to develop, guns will be examined more frequently, at the discretion of the Inspecting or Examining Officer; but in the case of guns on board a sea-going ship, they should, if possible, be re-vented and otherwise made serviceable, rather than be sentenced for a limited series of rounds, a course which should be avoided where practicable.

Examination of ordnance at home.

280. For home service, the arrangements laid down in paragraphs 281–284 will be carried out for ordnance in charge of the Royal Artillery, including that of the Militia and Volunteer Artillery, Corporations, and other public bodies.

Examiner and artificer from R.G.F. to visit each district periodically.

281. An examiner from the Inspection Branch (Guns and Steel), and an artificer from the Royal Gun Factories will visit the Districts (except Southern, Western, and Cork) periodically, or when required, to examine such ordnance as have fired the prescribed number of rounds, and such other guns as may be considered requisite, and perform such repairs as may be necessary. The ordnance artificer serving in the district will, when available, be associated with the examiner in carrying out such examinations and repairs.

Examiner to hand copy of report to

282. The examiner will hand a copy of his reports upon Form 132 to the officer in immediate charge of the guns, for early transmission to the Officer Command-

Digitized by Google

ing the Royal Artillery district, to enable that Officer to complete his annual return as prescribed in paragraph 364. In every case, however, the sentence of the examiner will be confirmed or otherwise by the Director of Artillery (Woolwich). officer in charge of guns.

283. In the Southern, Western, and Cork Districts, where there are Officers of the Staff for the Inspection of Warlike Stores, when a gun requires to be examined in consequence of its having fired the prescribed number of rounds, or from any other cause, the examination will be made by those officers on the requisition of the Officer Commanding Royal Artillery to the Senior Ordnance Store Officer in the district. A report of the examination will be made on the prescribed Form, and forwarded, through the Officer Commanding Royal Artillery, to the Director of Artillery (Woolwich), for confirmation; in doubtful cases, a gutta-percha impression should accompany the report for inspection and sentence, and practice from such guns will cease until the decision has been made known. Exceptions in the Southern, Western, and Cork Districts.

284. In those districts where there are not Officers of the Staff for the Inspection of Warlike Stores, as soon as a gun has fired the prescribed number of rounds since last examination, as laid down in paragraph 277, a notification of the same will be sent to the Director of Artillery (Woolwich), on Army Form G 875, by the Officer Commanding Royal Artillery in the district, and practice from the gun will cease until a decision has been made known. Gutta-percha impressions, properly labelled (*see* paragraph 311), should accompany the report. Districts where there are not Officers of the Staff for Inspection of Warlike Stores.

285. At all stations abroad the examination will be made under the direction of the Officer Commanding Royal Artillery at the station, by an Officer of the Staff for the Inspection of Warlike Stores, should there be one at the station, or, if not, by some other competent person. A report of the examination will be made on Army Forms G 869, G 872, or G 925, and forwarded through the same channels as laid down for the annual return (*see* paragraph 50). In such cases the word "Special" will be substituted for "Annual" in the heading of the form. Impressions will always be sent with the report if there is any doubt as to the serviceability of the ordnance examined, or if reventing or other repairs beyond what can be effected on the spot are deemed necessary, to enable the Director of Artillery to give such directions as he may think desirable; all firing from the piece must cease until it is pronounced serviceable. Examination of ordnance in Royal Artillery charge abroad.

Digitized by Google

Ordnance in important positions, &c.

286. If ordnance found unserviceable, or requiring reventing or repair, as above, are mounted in an important position, or if local circumstances render their immediate exchange necessary, they will at once be exchanged, if practicable, by requisition on the Senior Ordnance Store Officer, approved by the General Officer Commanding. In such cases the requisition, after being complied with, will be forwarded by the Ordnance Store Officer to the Director of Artillery.

Examination of guns on ships at home.

287. For ships at home, when a gun requires to be examined in consequence of its having fired the prescribed number of rounds, or from any other cause, the Officer Commanding the ship will forward a return, on Army Form G 872 for M.L., and G 925 for B.L. Ordnance, to the Senior Ordnance Store Officer, with a request to have the examination carried out. The Ordnance Store Officer (on receipt of such application) will arrange to have the service carried out at once by the Officers of the Staff for the Inspection of Warlike Stores. Should there be no Officer of the Staff for the Inspection of Warlike Stores available, the Senior Ordnance Store Officer will send a requisition to the Officer Commanding Royal Artillery to have the examination made by a competent person. After the examination the sentence will be entered on Army Form G 872 or G 925, as the case may be, and the Form will be handed to the Senior Ordnance Store Officer for transmission to the Officer Commanding the ship, to enable that officer to complete his annual return. In every case, however, the sentence of the examiner will be confirmed or otherwise by the Director of Artillery (Woolwich).

Practice to cease till reported upon.

All practice from the piece will cease until its serviceability has been determined.

Royal Marine Artillery, Royal Marine Light Infantry, &c.

288. Officers Commanding Royal Marine Artillery, Royal Marine Light Infantry, Her Majesty's Coast Guard, and Royal Naval Reserve will, when a gun requires to be examined in consequence of its having fired the prescribed number of rounds since previous examination, or from any other cause, forward a return on Army Form G 875, together with gutta-percha impressions, through the Senior Ordnance Store Officer of the District, for transmission to the Director of Artillery (Woolwich), and firing from the gun will cease until its condition has been reported upon. Should the officer in charge not have the means of taking impressions, he will apply to the Senior Ordnance Store Officer, who will, if necessary, arrange for the

Digitized by Google

service to be performed by the Officer of the Staff for the Inspection of Warlike Stores, where these are appointed, or by an ordnance artificer stationed in the district, or other competent person. The impressions will be left with the officer in charge for transmission with his return.

Examination of guns on ships abroad.

289. For ships abroad, when a piece requires to be examined in consequence of its having fired the prescribed number of rounds since the previous examination, or from any other cause, the Officer Commanding will forward, with a request that the service may be carried out, a return on Army Form G 872 or G 925 to the Senior Ordnance Store Officer, who will, on receipt of such requisition, arrange for the examination to be made at once by the Officer of the Staff for Inspection of Warlike Stores, should there be one at the station, or, if not, by a duly qualified artillery officer, and practice from the piece will cease until sentence has been given. On the completion of the examination, the sentence will be entered by the Inspecting Officer on Army Form G 872 or G 925, which will be sent to the Ordnance Store Officer for transmission to the Officer Commanding the vessel. This latter officer will take such steps as he may deem necessary.

When an I.W.S. is not available.

290. Should the services of an Officer of the Staff for the Inspection of Warlike Stores, either at home or abroad, not be available when the guns of a ship require to be examined, and no duly qualified Artillery Officer be available at the station to replace him, or should the ship be at sea, the service may be carried out by a duly qualified Naval Officer, selected by the Admiral or Senior Naval Officer on the station, and this officer may pronounce sentence on guns, and authorise minor repairs, but the responsibility of such examinations and repairs will rest with the Admiralty. The reports of the Naval Officers will be forwarded to the Director of Artillery (Woolwich) for record and such action as may be necessary.

Mode of sentence.

291. No ordnance on board a sea-going vessel should be sentenced otherwise than as serviceable or unserviceable, except in regard to minor repairs, which can be carried out at once on the spot. In a doubtful case the ordnance should be provisionally condemned. If circumstances permit, the directions in paragraph 325 should be carried out after exchange; and if the result be still doubtful, a special report, with impressions, should be forwarded to the Director of Artillery for decision.

Digitized by Google

Re-venting at stations abroad.

292. Rifled ordnance can be re-vented at the stations abroad shown in the list, in paragraph 174.

Esquimalt, or Simon's Town.

293. As there is no Ordnance Store Officer at Esquimalt or Simon's Town, application will be made to the Head of the Naval Establishment for the service of the Naval Engineer Officer stationed at these places.

Examination after re-venting or repairing.

294. When ordnance are re-vented or repaired in any way, the work, when completed, will be examined by an Officer of the Staff for Inspection of Warlike Stores, or other qualified person, who will ascertain and report whether it has been satisfactorily carried out; but in all cases impressions before and after repair should be sent through the proper channel for the information of the Director of Artillery (Woolwich).

Inquiry to be made immediately into the cause of accidents.

295. When any accident occurs, either at home or abroad, such as the bursting of a shell in the bore, the splitting of a breech-loading vent-piece, &c., immediate inquiry will be made into the circumstances, and the ordnance examined. If the Commanding Officer considers the damage to be of importance, he will send without delay a report of the circumstances through the same channel as his Annual Return, forwarding, if necessary, for the illustration of his report, gutta-percha impressions of the damage done to the ordnance.

Memorandum of examination.

296. The "Memorandum of Examination" issued with each rifled gun or howitzer will be known by that name, and will not bear an Army Form number. Every rifled gun or howitzer issued from the Royal Arsenal is accompanied by a "Memorandum of Examination," which contains a record of the material of the bore, and of the number of rounds fired, as well as the particulars of any slight defects which may exist in the piece at the date of issue. This Memorandum will remain in charge of the officer who has possession of the ordnance, and a certificate to the effect that it is in possession, and complete up to date, will be included in the Annual Return of Rifled Ordnance, Army Form G 872. At the conclusion of each day's practice with the piece, an entry will be made in the Memorandum by the officer in charge, giving a detail of the rounds fired (including blank charges), so that an accurate record of the firing may always be kept up. A statement of the results of the examination of any piece will be added to the Memorandum by the officer or other examiner who performs the duty, and when the gun or howitzer is returned into, or issued from, store, the Memorandum will accompany the transfer vouchers. If at any time the Memorandum be lost or

Digitized by Google

damaged, a duplicate can be obtained from the Director of Artillery (Woolwich), by whom also inside sheets for continuation of the record of the number of rounds fired will be supplied on demand.

2. Instructions for the Guidance of Examiners in the Inspection of Ordnance.

Tools, cleaning bores of guns

297. For cleaning the bores of rifled and smooth-bore guns, the tools in Tables A and B (pages 616 to 620) are provided. In the column for remarks in Table B are given the necessary instructions for the use of the tools for smooth-bore guns.

Rifled guns.

298. In rifled guns the bores should be thoroughly cleaned, in order that any defects existing therein, however slight, may be detected. This may be done by washing the bore well with water, and afterwards sponging with oil and drying. Should the bore be very dirty, or lacquered, it may be cleaned out by means of potash dissolved in hot water.

S.B. Guns.

299. In smooth-bore guns the whole bore, more particularly the part about the vent, will be thoroughly scraped clean from all paint, rust, &c., by the round, half-round, crown, and chamber scrapers, issued for the purpose.

Mortars.

300. The bores of mortars will be cleaned with the swords and the crown and half-round scrapers, attached to staves of a convenient length for the men to work with.

Examination of Bore.

Tools.

301. For the purposes of this examination, tools are provided for rifled and smooth-bore ordnance respectively (*see* Tables A and B, pages 616 to 620).

Defects in bore.

302. Should any defects be discovered, they need not be taken notice of in the case of smooth-bore ordnance, unless they are 0·1 inch deep in rear, or 0·2 inch deep in front of the trunnion; or unless they have jagged edges likely to retain pieces of cartridge; or in the case of rifled ordnance, unless there are new defects not shown in the "Memorandum of Examination," or old ones which have materially increased. If, however, defects be of the nature mentioned, impressions will be taken of the bore, as under :—

Impressions required.

B.L. guns.

(*a*) B.L. guns—Impressions of the whole of the powder chamber, also all round the bore at the commencement of the rifling. Should the erosion in the bore extend further, another set in front of these should be taken.

R.B.L. guns.

(*b*) R.B.L. guns—Impressions will only be taken

Digitized by Google

where flaws are seen, and, as a rule, of the breech bush in the gun, and of the face of the vent-piece.

R.M.L. wrought iron ordnance. (*c*) R.M.L. ordnance—Impressions of the powder chamber, showing the bottom of the vent, and the bore for a distance of 3 feet from the commencement of the rifling. If the examination is merely to ascertain the amount of the erosion, an "up" impression will be sufficient.*

R.M.L. converted guns. (*d*) R.M.L. converted guns—Impressions of the whole of the powder chamber, showing also the cup and the joint where the cup closes the end of the bore.

S.B. ordnance. (*e*) S.B. ordnance—Impressions of the crown (curve of powder chamber extending from the vent), and bottom of the vent, and portion of the bore adjoining.

Taking Impressions of the Bore.

Impressions of rifled guns. **303.** The impressions of rifled guns should be carefully examined in order to ascertain the amount of erosion, which is generally deepest at the front of the chamber and commencement of the rifling. Should a flaw or flaws be found in the bore or chamber, or lines of scoring which appear likely to develop into cracks, the piece will be provisionally condemned, unless they are very short and insignificant, in which case the gun may be sentenced to fire 5 service rounds. Another set of impressions of the bore at the locality affected should be taken after firing, and compared with those previously taken. If no change appears to have occurred, the gun may be made serviceable, but if the flaws or lines have extended at all, the gun should be provisionally condemned. Defects are most important when situated in the chamber or commencement of the rifling.

B.L. lined guns. **304.** In the case of B.L. lined guns, four impressions of the joint of the liner must also be taken for examination in addition to those already enumerated.

Powder chambers and bores of rifled guns. Wood blocks. **305.** For taking impressions of the powder chambers or of short portions of the bores of rifled guns, special instruments are issued, but should they not be available, or should full-length impressions be required, wood blocks, which can be made by any carpenter, and are therefore not issued, may be used; but it is advisable to take impressions of the powder chamber, if possible, with the special instrument provided. In all cases, however, where there is any

* The depth of the erosion can be measured with sufficient approximation from the gutta-percha impression, by laying a straight-edge held parallel with the bore, on the top of the impression of such erosion, and then by measuring with compasses the height above an unworn portion of land or groove.

Digitized by Google

doubt as to the state of the bores of rifled guns, impressions should be taken of the whole length by means of the blocks.

Impressions of S.B. ordnance

306. In smooth-bore ordnance impressions of defects will be taken with gutta-percha, by whatever means may be available.

Impressions of quick-firing guns.

307. The instruments for taking impressions of bores of quick-firing guns are made of wood. Before placing gutta-percha on the instrument the face of it should be rubbed with soft soap to prevent the gutta-percha adhering to it. The instrument is in two parts, one of which is wedge-shaped for the purpose of pressing the other part with the gutta-percha tightly against the bore. A small wedge is supplied for placing between the parts of the instrument to further increase the pressure, especially when taking impressions of the chamber.

Position of defects, how noted in returns.

308. In order to note the position of any defects upon an impression, their distance from the muzzle is measured in inches, and noted as *up*, *right of up*, *&c.*, as the case may be.

Powder chamber.

309. Defects in powder chambers of R.B.L. guns are measured from the breech end, and noted in a similar manner to defects in the bore.

Circumferential defects.

310. Circumferential defects are noted round the bore in the direction of the movement of the hands of a clock— *e.g.*, R of U to R of D, L of D to L of U.

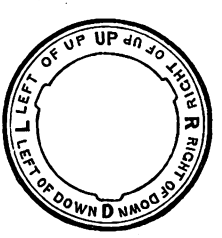

IMPRESSIONS ARRANGED FOR RECORDING DEFECTS.

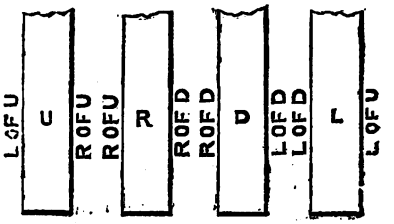

Digitized by Google

Label to be gummed to impression.

311. When an impression is forwarded with a return, for report or decision, a label will be gummed to the back, showing the name of the station, the date of taking the impression, the direction of the muzzle, the nature and number of the piece, the number of rounds fired, and the position of the fissure (if it be in any part but the vent), defined according to the directions. The impression should be reduced to the smallest dimensions compatible with showing the whole of the defect.

Defects in Bore.

Rifled ordnance.

312. With rifled ordnance the following defects are likely to be found:—

Tool marks.

(*a*) Tool marks, or slight irregularities and scratches caused in manufacture during the boring and rifling. A chip or grain of sand getting between the boring or rifling head and the surface of the bore will cause such tool marks; and the emery powder used in lapping leaves very fine marks on the hard surface of the steel tubes.

Steel tubes.

(*b*) With steel tubes,* on account of the hard smooth surface, these are more apparent, and have been at times mistaken for fine cracks when running along the bore. To an experienced eye, however, the difference is easily perceptible.

Wearing of the grooves.

(*c*) Slight wear of the sides of the grooves from the friction and over-riding of the studs of projectile is also found at times, but this takes place as a rule only in guns having iron tubes, or when with steel tubes a uniform twist is employed with a heavy gun.

Defects in wrought-iron barrels.

(*d*) With wrought iron "A" tubes† imperfections of weld always exist, and scarcely any are quite free from them; they are, however, of little consequence as a rule, unless they are found to increase very much when the gun is used.

Technical names of defects in wrought iron barrels.

313. The following are the technical names of the several defects likely to be found in wrought-iron barrels:—

Coil marks.

(*a*) Coil marks, where the line of coil running round the barrel is visible, the weld not being quite perfect; but in this case the defect has no appreciable depth, and is of little consequence.

* The material of which the barrels are made has for some years past been stamped on the muzzle, and is also entered on the Memorandum of Examination.

† See note on page 552.

Digitized by Google

(*b*) Defective welds, the same sort of defect as coil marks, but deeper and more important; they run round the bore in coiled barrels, and along it in solid forged barrels. Defective welds.

(*c*) Specks, small spots, and pin-holes in the metal, caused by dirt in iron, blisters, &c. These sometimes occur in clusters. Specks.

(*d*) Flaws, larger defects of the same nature. Flaws.

(*e*) Longitudinal cracks are also found in solid forged barrels, caused by the gas eating into the defective welds and splitting the barrel lengthways. Longitudinal cracks.

314. Steel barrels are free from the defects so inherent to wrought iron, and generally show a perfectly smooth and even surface, very slightly scored by a number of very minute tool marks. Occasionally a small piece is found chipped out, as it were, but leaving a smooth hollow behind it, which, if small, is quite an unimportant defect. Defects in steel barrels.

315. Longitudinal cracks at times occur which develop into splits. When such are found they are of far more importance than similar cracks in a wrought-iron tube. Longitudinal cracks in steel barrels.

316. A few instances have occurred in which steel tubes have split on service from the bursting of a shell inside the bore; in some of these the tube split at the muzzle. In cases where steel barrels have split in M.L. experimental guns when being tested for endurance, the crack has commenced at the edge of one of the grooves (as in coiled barrels) and extended into the powder chamber. A crack in the chamber, should it exist, might be so fine as not to be visible from the muzzle; it is essential that impressions in gutta-percha should in all cases be taken of the chambers of R.M.L. ordnance, as before stated, and care must be taken to discriminate between a crack and a superficial streak or tool mark. Splitting of steel barrels, how caused.

317. Scoring or guttering is caused by the rush of gas round the projectile in R.M.L. ordnance, due to windage, and is common to both iron and steel barrels. This wear is principally over the top of the projectile, where the windage is greatest, owing to the projectile resting on its lower studs. In small ordnance this is very slight, but when very heavy charges are used the surface of the bore is gradually eaten away to a considerable extent. Even in extreme cases, however, scoring has not caused the destruction of a piece, though in some instances, acting on the corner of a groove, it has tended to split the tube. The erosion generally begins in front of the chamber of the piece, near the commencement of the rifling, and is usually found to extend, according to circumstances, 4 or 5 feet up Scoring or guttering. Defects common to both iron and steel barrels.

Digitized by Google

the bore. Slight traces of erosion are also found in the powder chamber itself.

Dents or abrasions due to shells bursting.

318. Dents or abrasions are caused by the bursting of a shell in the bore. These are as a rule of very little importance. In one or two instances muzzles have been blown off from this cause; but generally the only result is to cut up and graze the bore more or less. It is found that such injuries seldom interfere with the efficiency of the piece, and an armourer can generally file down any metal set up in the bore.

S.B. ordnance. Corrosion of bore.

319. In S.B. ordnance the bore is liable to be much corroded if exposed to the action of salt water, and occasionally a flaw in the metal, leaving a hole, may also occur. Generally speaking, however, the defects which condemn such pieces will be found at or about the vent (*see* paragraph 332).

Sentence as to Bore.

Sentence as to bore.

320. In sentencing ordnance, according to the state of the bore, it is essential to discriminate between defects which are characteristic of the material, and cannot wholly be avoided in manufacture, and those which are created or developed on service, such as cracks in a steel tube. In coiled barrels, defects are often numerous, and generally of little importance, while in steel barrels the case is reversed; defects seldom occur, but when they do, they are, generally speaking, of great importance.

Extent of defect.

321. It is almost impossible to lay down any definite rules as regards the extent or depth of a defect which should necessitate the condemnation of a barrel; a great deal must be left to the judgment and experience of the inspector.

Sentence on coiled barrels.

322. Unless there is reason to believe that there has been some material change from the former state of the defects, ordnance with coiled barrels need not be condemned. Speaking generally, the depth of a defect is of more importance than its extent, but should a defective weld run right round the bore, the piece would be liable to part at that point, and must be considered unserviceable.

Solid forged.

323. In solid forged barrels a flaw running lengthways has a tendency to develop into a crack, especially if it occurs in the powder chamber. If the inspector finds a case of this kind he will put the gun aside, but he will endeavour to discriminate between this and a mere streaky line, which is unimportant.

Steel barrel.

324. In steel barrels, any crack, however fine, would necessitate the provisional condemnation of the ordnance,

Digitized by Google

Testing barrels.

325. The best method of testing ordnance is to take an impression of the defect, and then to fire a few rounds and take another impression. If on comparing these impressions, the defect does not appear to have increased, the barrel may be considered as serviceable.

Examination of Vent.

Examination of vent.

326. Besides examining the bore of a piece of ordnance, it is necessary especially to examine the vent-bush itself, and that part of the chamber or bore of the piece where it enters. For this purpose, in S.B. and R.M.L. pieces, the vent channel is thoroughly cleared and scraped, and then gauged by means of a set of gauges issued for the purpose.

Gauging.

Choke.

327. It is not uncommon to find a choke where the metal has been set up near the bottom of the vent; this should be removed by a drill or rimer before the gauge is taken.

Impressions of vents.

328. A clean impression of the bottom of the vent must also be taken, this will be taken with the improved instruments for taking impressions of bores, the plates for which are now fitted with ends to suit the chambers of guns (*see* paragraph 305), or they may be taken with the instrument provided among the tools for venting ordnance, if this instrument and the proper blocks are at hand.

R.B.L. guns.

329. R.B.L. guns are vented through the breech-block or vent-piece: the mode of examining the same is laid down in paragraph 338.

Ordance serviceable after re-venting.

330. After re-venting, ordnance will be considered as serviceable for a fresh number of rounds.

Defects as to Vent, and Sentence.

Effects of firing on vents.

331. The effect of firing on a vent is seen either by a gradual increase to the channel of the vent itself, by an irregular wearing away of the bottom, by the metal of the vent setting up, and the gas forming a hollow ring round it, or by fissures or hair lines radiating into the metal of the bore from the edge of the vent bush.

Sentence.

332. Ordnance will be sentenced either for re-venting or condemnation, according to the state of their vents, as follows:—

S.B. converted guns.

(*a*) S.B. ordnance and converted rifled guns.—To be re-vented if 0·3-inch gauge passes down.

Other rifled ordnance.

(*b*) Other rifled ordnance, if 0·275-inch gauge passes down.

S.B. bushed ordnance.

(*c*) S.B. bushed ordnance.—The defects usually found round the vents of bushed pieces are the giving way of the iron round the bush, from the gas getting

Digitized by Google

in between the two metals (*see* Fig. 1), and the fissures or hair lines which radiate in the iron from the edge of the vent-bush (*see* Fig. 2).

Ring worn round bush.

(*d*) The metal round a bush begins to give way almost immediately after a piece is vented, forming a hollow ring round it which gradually increases. So long as this wear is uniform, and the edges are not jagged, it is not of importance ; and ordnance will not be re-vented or condemned for this cause, until the ring has become 0·1 inch deep, or 0·1 inch wide. If, however, the edges are ragged, or if one side has given way much more than the other, so as to be likely to hold a piece of unconsumed cartridge, the examiner must use his discretion as to sentencing the ordnance, it being impossible to lay down fixed rules for all cases.

Bushed Ordnance.—Fig. 1.

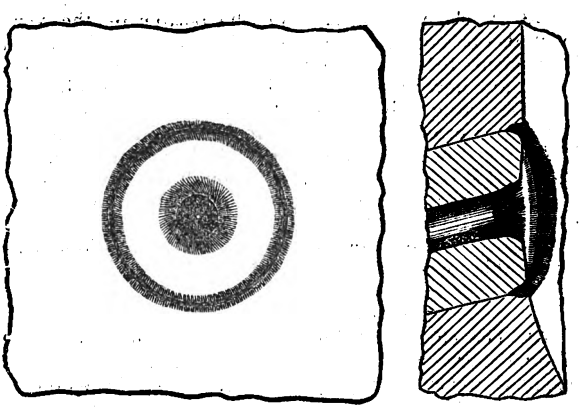

Fissures, or hair lines.

(*e*) Fissures, or hair lines, radiating in the iron from the edge of the bush, will be found in bushed ordnance. There will often be one on either side, and a third to the front. The examiner will carefully trace the fine lines on the gutta-percha impressions, and if they extend more than one-tenth part of the circumference of the bore in any direction, measured from the original centre, he will provisionally condemn the piece. One-tenth may be taken as—

68-pr.	....	....	....	$2\frac{1}{2}$ inches.
32 ,,	....	....	....	2
24 ,,	....	....	....	$1\frac{3}{4}$

Digitized by Google

Bushed Ordnance.—Fig. 2.

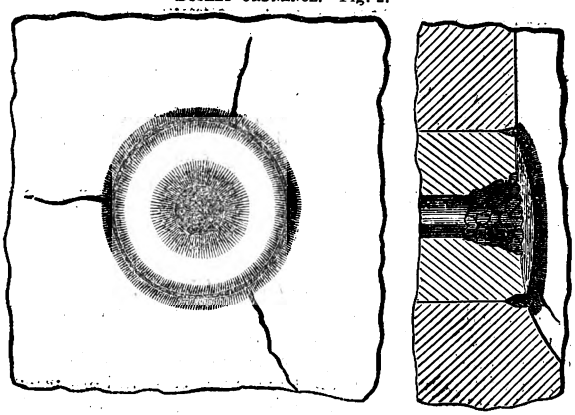

(*f*) R.M.L. ordnance.—Should the ring (Fig. 1) above, worn away round bottom of bush, be 0·075 inch wide, or 0·1 inch deep, or jagged and irregular, so as to be, in the opinion of the examiner, likely to retain a piece of cartridge, the gun will be condemned for re-bushing, and if possible with a cone bush. Much wear of the lower portion of the fire-channel in the vent will also necessitate the re-venting of the gun. The amount and nature of wear which should condemn a vent must be left to the judgment of the examiner. Generally speaking, if any sign of fissure of the copper is apparent, or if the thickness of the wall is much reduced in any part, the vent must be condemned. In case of hair lines radiating from the edge of the vent in steel-lined pieces, the gun must be provisionally condemned should the hair lines be 1 inch in length, unless when directly to the front or rear, when the limit of condemnation is smaller ($\frac{1}{2}$ inch) owing to that position being the worst for the development of a crack. The measurements are taken from the edge of the bush. Vents of R.M.L. ordnance.

333. In heavy ordnance with steel barrels, a so-called fissure frequently develops in front of the vent (caused apparently by the rush of gas through the vent-channel). This fissure partakes at first of the nature of a slight scoring. If not attended to, it may increase in depth to a crack. Such a fissure should therefore be filed out and Fissures in steel barrels.

Digitized by Google

an examiner must use his judgment as to when this operation is necessary, but in no case should such scoring be allowed to attain a depth of 0·01 inch.

Discretion as to sentence.

334. Although a properly instructed examiner will generally be able, with the aid of the above rules, to sentence a vent either as serviceable for a further series of rounds (as laid down in paragraph 277), or for re-venting, yet many cases will arise in which it will be advisable for the vent to be sentenced as fit to fire some smaller number of rounds, and then to be further examined (*see* paragraph 279). Such cases must be left to the discretion of those whose duty it is to give sentence on the impressions taken.

Examination of B.L. Fittings.

Method of examination.

335. All removable fittings should be taken entirely apart and examined in order to ascertain that they are quite sound and in proper working order. If the gun is fitted with cup obturation, the copper ring and obturating cup should be carefully examined to see that neither has been cut by the escape of gas. In the case of guns with the De Bange obturation, the pad should be examined to see that the canvas covering is intact, and in proper order for use. If the pad is found very hard and dry, it should be soaked in a mixture of olive oil and tallow. The protecting discs should also be carefully examined, and if the tin be fused, or the steel rings eroded or broken, should be replaced by new discs.

Examination of R.B.L. Fittings.

Examination of breech-screw.

336. The breech-screw will be examined with the straight-edge, in order to ascertain that the face is quite flat and true; if it be not, it will be filed; the thread should be examined by tapping with a wood mallet, and should not be broken or burred, but a considerable portion may be removed if injured, without destroying the efficiency of the screw.

Lever, tappet, and keep pins.

337. The lever and tappet should be sound. The lever handles of naval guns are sometimes broken off, but the lever can still be used in this state, though not so conveniently. The keep-pins must be sound.

Vent-piece.

338. The vent-piece is the most important fitting, and should be perfectly sound, neither cracked nor bulged. The back and sides, when tested by the straight-edge, should be quite flat and true. The fracture of vent-pieces is frequently owing to the back not being true to the face

Digitized by Google

of the screw. The copper ring on the vent-piece, as well as the breech bush at the end of the barrel, must be sufficiently high to prevent the action of the gas on any part of the iron. The angle face of the 7-inch vent-piece should be flat, and should work truly against the end of the barrel, and the nose should fit closely, but not too tightly, into its place. The vent channel should be in good order. If it is so much worn that a 0·3-inch gauge can pass through, the vent piece should be returned for repair. A cavity frequently forms at an angle of the vent channel, but this (which should be examined with a probe) does not entail the immediate condemnation of the vent-piece, unless the examiner considers it dangerously large.

Cross-head.

339. The cross-head should not be loose, as instances have occurred of its being broken off while firing. In all cases before taking a vent-piece into use for practice, it will be advisable to test the soundness of the cross-head as well as that of the neck, by tapping with a hammer.

Breech-bush and vent-piece.

340. The bush of a breech-loading gun will be sentenced to be renewed if found to be so much expanded that the gas could escape between it and the tin cup or vent-piece, and when it is not possible to remedy the same by facing. In order to prevent serious damage to gun and vent-piece, especial attention should be paid, both before and during practice, to the breech-bush in the gun and the copper ring on the face of the vent-piece. If at all dented they should be carefully faced before use. During practice the officer in charge should take means to ensure these points being looked to constantly, and should stop practice with any gun or vent-piece in which eating away of the copper by the escape of gas begins to show itself. When this once sets up, a few rounds are often sufficient to damage permanently the gun or vent-piece.

Copper ring.

Vent-pieces to be changed during practice.

341. During continuous practice with 40-pr. R.B.L. guns, the vent-pieces should be frequently changed (say at the end of each 10 or 15 rounds). The vent-piece not in use is thus allowed time to become thoroughly cool, and opportunity should then be taken to carefully examine it with reference to the state of the copper ring, &c. Instructions to this effect are contained in the Manual of Artillery Exercises.

Breech-blocks of 40-pr. side-closing gun.

342. The breech block of the 40-pr. side-closing B.L. screw gun should be treated in the same way as the vent-piece, which it resembles generally, except that it has no vent, the gun being radially vented.

Drill vent-pieces.

343. For the 40-pr. R.B.L. guns, a special vent-piece with a bronze face is issued for drill purposes, to save the

Digitized by Google

wear on the service vent-piece. It should invariably be used when at drill.

Examination of Q.F. Breech Fittings.

Instructions to be observed in removing and replacing the breech fittings of Nordenfelt 6-pr. Mk. III.

344. In removing and replacing the breech fittings of quick-firing Nordenfelt 6-pr., Mark III guns, the following instructions will be observed :—

To Remove Fittings.

(*a*) Before removing the fittings the drill-stop is placed in the "dismounting hole for mechanism."

(*b*) Open the breech by drawing back the breech mechanism lever, which can then be withdrawn, the hammer and drift being used if required, and the breech-block with wedge and fittings removed from underneath the breech-slot, care being taken to support the block when withdrawing the lever.

(*c*) The drill-stop is removed by placing the pin in the "dismounting hole for drill-stop," and inserting a screwdriver behind it. The extractor may then be removed.

(*d*) The bronze loading shield is attached by one fixing-screw and a dovetail. Remove the screw and tap the shield in an upward direction.

(*e*) The bracket trigger-piece is secured by two fixing screws.

(*f*) Unscrew the axis-pin from the right side of the wedge, to perform which the breech-block must be driven back into the cocked position, so as to admit of the lever of the axis-pin clearing the projecting stop on the block (this may be performed by smartly knocking the upper end of the wedge upon the floor or bench) ; the "action cam" can then be removed, and the breech-block slidden from the wedge, the trigger lever falling out during the operation.

(*g*) With a hammer and drift remove the "main spring" from the breech-block from the left side, care being taken that the tappet lever trigger is in the cocked position, the firing-pin and tappet lever trigger can then be withdrawn.

To Assemble Gun.

(*h*) Replace the "firing-pin," "tappet lever" trigger, and "mainspring," in the order given, in the breech-block.

(*i*) The breech-block must then be replaced by forcing it smartly over the wedge into the cocked position, placing the trigger lever in position during

Digitized by Google

the operation by pressing the projections into their seat by the breech-block.

(*j*) Replace the action-cam and axis-pin.

(*k*) Replace the bracket trigger-piece.

(*l*) Replace the extractor and drill stop, placing the pin of the drill-stop in the hole for dismounting mechanism.

(*m*) The breech-block, with wedge and fittings, should now be replaced from the underside of the breech-slot; insert the "breech mechanism lever" and place the "pin of the drill-stop" in the firing-hole.

In replacing the wedge and block care should be taken that the head of the lever of the axis-pin of the action-cam is placed under the stop on the breech-block to prevent the block sliding back into the uncocked position. After the breech-block has been replaced in the gun, remove the lever of the axis-pin from under the stop.

(*n*) Replace the loading shield.

Instructions to be observed in removing the breech fittings of Nordenfelt 3-pr. Mark I guns.

344A. In removing and replacing the breech fittings of quick-firing Nordenfelt 3-pr. Mark I guns, the following instructions will be observed.

To Remove Fittings.

(*a*) The bracket trigger is attached by means of four fixing screws and a dovetail; remove the screws and tap the bracket in a downward direction.

(*b*) Before removing the breech mechanism the pin of the drill-stop is placed in the dismounting hole for mechanism.

(*c*) Open the breech by drawing back the breech mechanism lever, which may then be withdrawn and the breech-block with wedge and fittings removed from the bottom of the breech-slot, care being taken to support the block when withdrawing the lever.

(*d*) The drill-stop is removed by placing the pin in the dismounting hole for "drill-stop," when it can be withdrawn and the extractor also removed.

(*e*) Unscrew the axis-pin from the right side of the wedge, the action cam can then be removed and the breech-block slidden from the wedge.

(*f*) Uncock by pressing the trigger lever. With a hammer and drift remove the main spring from the breech-block from the left side, the "firing-pin," "lever trigger," and tappet lever trigger may then be removed.

Digitized by Google

To Assemble Gun.

(*g*) Replace the firing pin, tappet lever trigger, trigger lever, and mainspring in the order given, placing the trigger lever between the two arms of the main spring before replacing the latter.

(*h*) The breech-block must then be replaced, forcing it smartly over the wedge until it is in the cocked position, the trigger lever being kept in its proper position by pressing the projections into their seat in the breech-block during the operation.

(*i*) Replace the action cam and axis-pin.

(*j*) Replace the bracket trigger.

(*k*) Replace the extractor and drill-stop, placing the pin of the drill-stop in the dismounting hole for mechanism.

(*l*) The breech-block, with wedge and fittings, should now be replaced from the underside of the breech-slot, the breech mechanism lever inserted, and the pin of the drill-stop placed in the firing-hole.

Instructions to be observed in removing and replacing the breech fittings of Hotchkiss 6-pr. and 3-pr.

345. In removing and replacing the breech fittings of quick-firing guns, Hotchkiss 6-pr. and 3-pr., the following instructions will be observed :—

(*a*) Unscrew the wedge-stop on the left of the breech with the aid of a tommy ; the wedge with its fittings can then be withdrawn from underneath the breech-slot, and the extractor removed from the left side of the slot.

(*b*) The clamp for the tangent sight is secured in a recess in the gun by the spindle. In order to remove the clamp, the milled head (which is attached to the spindle) should be withdrawn and the clamp lifted in an upward direction.

(*c*) The trigger is held by a screw in the bronze trigger-guard, which is attached to the gun by three screws.

(*d*) The crank-handle is secured to its shaft by a fixing-screw, on removing which the handle and shaft can be withdrawn.

(*e*) The mainspring is removed from the wedge by pressing the spring down and pushing back the retaining cross-head, the rocking shaft is then withdrawn from the right side of the wedge by striking it on the left with the aid of a tommy ; the hammer with firing-pin can then be removed, also the trigger sear and its spring.

(*f*) By inserting a screwdriver under the firing-pin

Digitized by Google

and raising the outer end, it can be struck out from one side of the hammer.

(*g*) The face-plate of the wedge is attached by two screws.

(*h*) The fittings are replaced in the reverse order.

Examination of S.B. B.L. Fittings.

Breech-screw.

346. The breech-screw of the 32-pr. S.B. B.L. gun will be examined with the gauge for this fitting. The inner edge of it is laid on the smooth portion of the screw and over the face; thus any bulge or setting up is detected. The threads of the screw are gauged by the upper edge. Should the threads be set up, the screw would not be condemned unless found not to work readily in the gun. If the screw jams in working, the gauge enables the examiner to detect the defect, which may often be remedied by filing. On no account should any portion of the thread be cut away to remove a crack, &c., as is done in the case of R.B.L. breech-screws (*see* paragraph 336).

Obturating cup.

347. The obturating cup should be turned round when on the breech-screw, and the outer edge inspected for marks and lines indicative of gas in motion. Any such defect on the exterior of the lip would condemn the cup; cracks in the steel should also be looked for. Care should be taken that the edge of the cup is kept uninjured and free from burrs; should any burrs or notches be observed, the cup should be removed and replaced by a sound one. Abrasions on the edge of a cup can generally be removed with a dead smooth file. The action of the cup depends on the convex form of the base upon which it rests. When the gun is fired, the flat underside of the cup is forced, by pressure of the gas, to take the form of the base, and the circumference is expanded against the ring of copper which surrounds it. If the underside of the cup should lose its flatness and take a permanent hollow form, it may be packed up by inserting a thin brass disc beneath it. The hollowing of the underside of a cup will manifest itself by a diminution of resistance to the tightening of the lever against the stop. In all reports the number of the cup should be stated.

To remove the cup.

348. When the gun is not in use the cup should be removed from the breech-screw, and kept oiled and free from rust. The cup may be removed as follows:—Unscrew the check nuts with the wrenches (*a* and *b*) issued with the gun, the cup and spindle can then be withdrawn. Reverse the operation in replacing the cup.

Lever.

349. The lever with its handle should be sound.

Copper obturating ring.

350. Gas marks on the obturating ring are detected by

Digitized by Google

placing a light in the rear end of the chamber, and passing the top of the finger over the surface of the ring. The marks will show also on gutta-percha impressions.

Lever, retaining clip.

351. The retaining clip is fixed to the lever by a screw. If the spring be weak, the clip may be taken off and a new spring inserted.

Carrier.

352. If the carrier be found not to work correctly, it should be removed, and the under plate unscrewed. Two small bell crank levers will be found within, stamped "Lever A" and "Lever B"; their spindles may be unscrewed, and the flat spring below "Lever A," or the spiral spring round stop of "Lever B," may be replaced, as also may other damaged parts.

Catch for carrier.

353. If the catch for carrier is a fixture on the breech it should be inspected for soundness and proper working.

Examination of Exterior.

Cast-iron ordnance.

354. In examining the exterior of cast-iron ordnance, the points to pay attention to are the soundness of the trunnions and cascable loop.

Wrought-iron ordnance.

355. Very considerable defects may exist on the exterior of wrought-iron ordnance, without the strength being affected. Occasionally, on firing, one of the outer tubes develops a flaw running round the gun, due to the coil or tube having been in an undue state of tension. Such defects are, as a rule, unimportant, and are easily repaired when the gun passes through the Royal Gun Factory.

Defective welds.

356. Defective welds on the exterior, near the muzzle, are sometimes developed in the "B" tube.

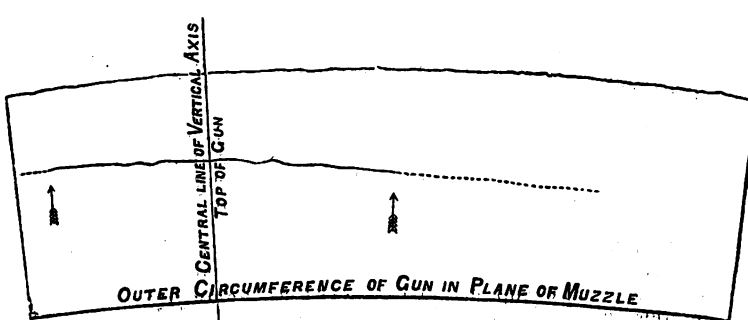

Example.

357. The above sketch represents a defective weld in the exterior of the "B" tube of a 9-inch R.M.L. gun. The

Digitized by Google

opening, after 7 rounds (2 battering, 5 full), extended 30·5 inches round the chase at about 12 inches from the muzzle. The gun was then sent to the Royal Gun Factory for examination and repair. It was submitted to the test of firing 40 battering rounds, and the crack then extended 16·5 inches further, but no other alteration took place.

358. This result shows that defective welds near the muzzle are of no practical moment, and that no ordnance should be condemned on such grounds alone, although it should be exchanged when opportunity offers. Result.

359. If it be found that a shell has burst in the bore, the exterior will be thoroughly scraped with old swords, and cleaned (with potash water, if necessary), in order to ascertain whether it is perfectly sound. Shell bursting in bore.

360. It also occasionally happens with wrought-iron ordnance that the outer coils shift on firing; if, on examination the shifting is found considerable, the ordnance will be provisionally condemned, but a slight shift, which is sometimes perceptible when the piece is first used, and which has gone no further afterwards, may be disregarded. Unless there be reason to suspect damage on the exterior, it will not be necessary to scrape the whole of the paint off the exterior whenever a gun is examined. Shifting of coils.

361. For B.L. guns the exterior should be carefully looked over in order to ensure that the metal is sound. Openings may appear between the hoops on the chase; these, however, if slight and uniform all round, may be considered unimportant, and should be hammered up. B.L. guns.

362. Large defects on the exterior will be noted on the "Memorandum of Examination" (*see* paragraph 296). Large defects.]

IV.—RULES FOR FURNISHING ANNUAL RETURNS OF ORDNANCE.

363. A return on Army Form G 902 of all ordnance in charge of the Ordnance Store Department, will be furnished yearly on the 1st of June to the Director of Artillery for the "Director of Artillery (Woolwich)." This return will distinguish land service ordnance from naval ordnance, and in cases where ordnance may be left at the station temporarily by the Navy, and not taken up on ledger charge by the Ordnance Store Department, they will also be included, but shown separately. Ordnance in O.S.D. charge.

364. Returns of ordnance, on Army Forms G 869, G Annual return,

Digitized by Google

872, and G 925, will be sent yearly, by officers of Artillery in command of districts, as specified in paragraph 50. Officers commanding vessels of war of every description having ordnance on board, and likewise Royal Marines, Royal Naval Reserve, and Coast Guard, having ordnance in their charge, will furnish returns on the 1st January, through the Admiralty, to the Secretary of State for War. These annual returns are forwarded to the Director of Artillery (Woolwich) for report and record.

Descriptive marks.

365. It is necessary for the identification of ordnance that the descriptive marks should be accurately entered in this return.

Date of last examination.

366. The column headed "Date of last examination" will be filled in from the date of the last inspection, made by an Inspecting Officer, or other qualified person.

Condition of bore and sentence.

367. The "Condition of bore" and "Sentence" will be taken from the last report made by the Inspecting Officer, or other examiner conducting the periodical or special examinations ordered; but if the ordnance has not been examined, owing to only a few rounds having been fired from it, these columns may be left blank, unless the Commanding Officer should see cause to call special attention to the piece.

Number of rounds fired to be entered in return.

368. The "Number of rounds fired" at the date of making the return will be very carefully entered under the several headings; it is exceedingly important, for the sake of the record, that the number should be given correctly. The number of rounds fired with projectiles since previous examination should also be given.

Also to be recorded from year to year.

369. The number of rounds fired with projectiles at the time of making the annual returns will be very carefully recorded from year to year.

Condition of fittings, and vents.

370. The columns regarding the condition of the fittings of the breech-loading guns, and the vents of muzzle-loading ordnance, will be filled in from the reports of the Inspecting Officer or other examiner.

Columns for "Remarks."

371. Particulars of any special defect on the exterior or other part of the ordnance will be noted in the column for "Remarks," if not entered in any other part of the return; as also any peculiar circumstance, such as the re-venting of a muzzle-loading gun, the bursting of a shell in the bore, the fracture of fittings, &c. Reference will be made, when necessary, to explanatory documents.

Ordnance

372. Ordnance which have not been fired since the

Digitized by Google

Digitized by Google

ORDNANCE. R. M. L. 16 INCH. MARK I.

FIRING ARRANGEMENT

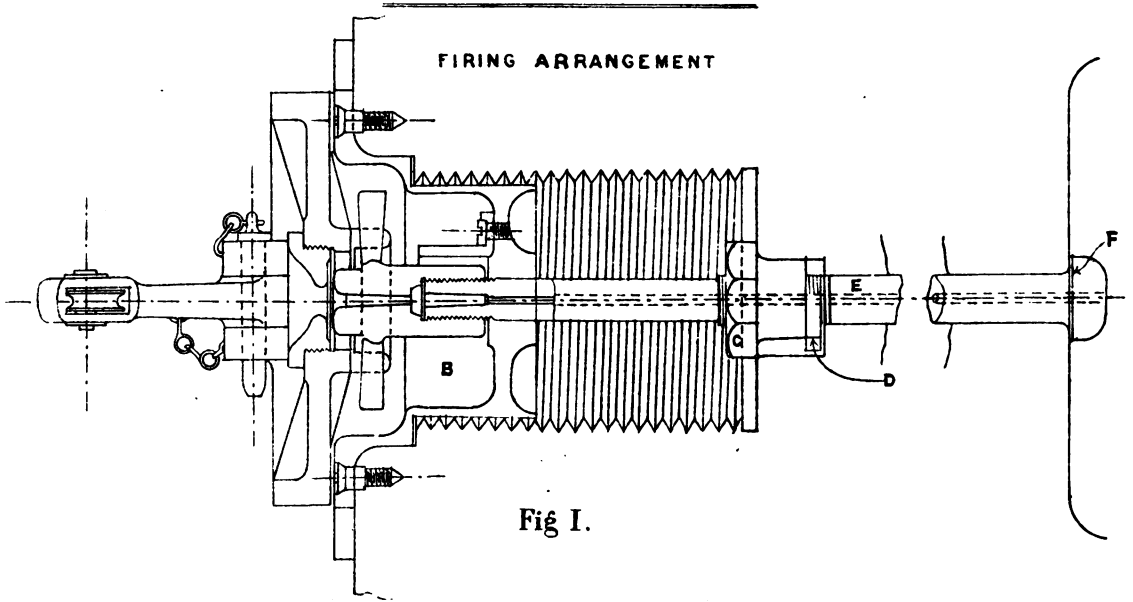

Fig I.

to face page 569

Judd & Co Ltd. Lith. 63, Carter Lane, 4059. 10. 91.

Digitized by Google

Digitized by Google

ORDNANCE. R.M.L. 16 INCH. MARK I.

DIAGRAM SHEWING REMOVAL OF VENT-AXIAL.

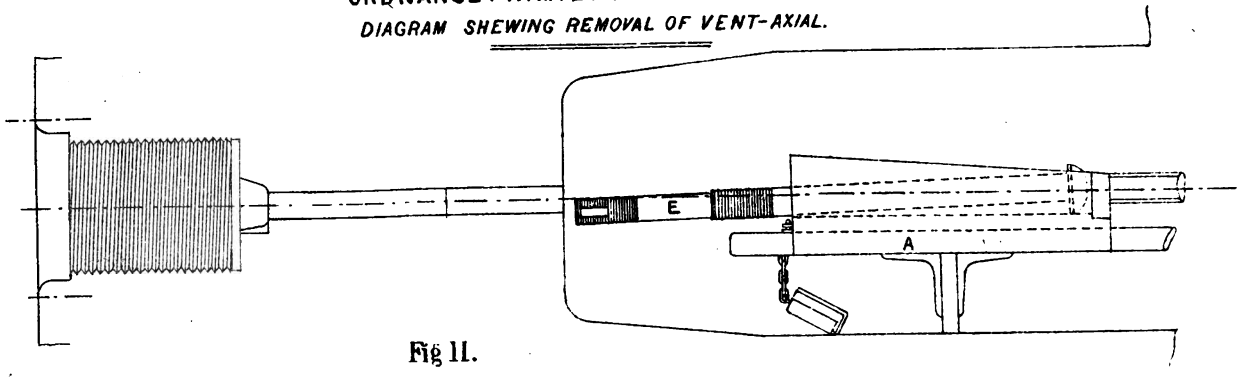

Fig II.

DIAGRAM SHEWING INSERTION OF VENT-AXIAL.

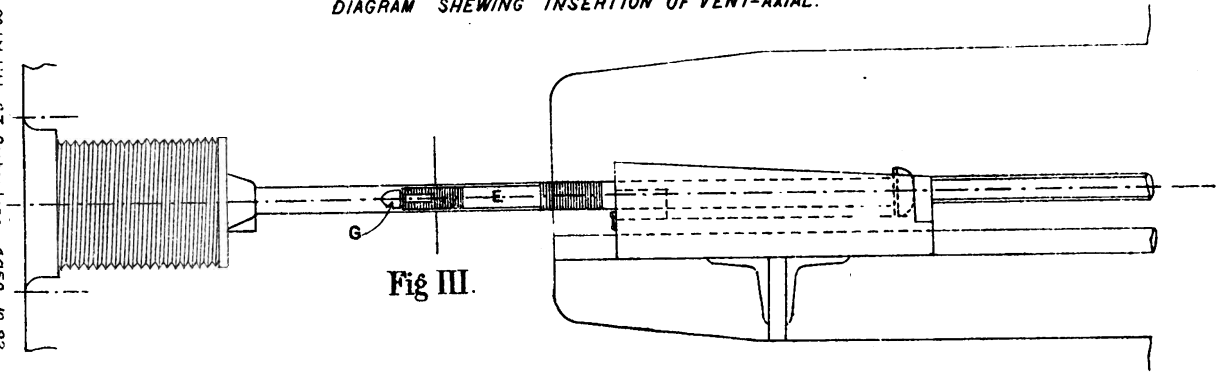

Fig III.

to face page 569.

Judd & Co Ltd, Lith. 63, Carter Lane 4059. No. 92

Digitized by Google

previous return will be entered in the return; the columns headed "Condition of bore," "Sentence," "No. of rounds fired," and "Condition of fittings," need not be filled in, but the date when the piece was last fired will be entered in the column for "Remarks." not fired since previous return.

V.—INSTRUCTIONS FOR REMOVING AND REPLACING AXIAL VENTS FOR R.M.L. GUNS.

373. To remove the axial vent of the 17·72-inch, 16-inch, and 12·5-inch, Mark II, R.M.L. guns, insert the cradle A, Fig. II, in the bore, take off the socket supporting the vent B, Fig. I, and remove the vent nut C, Fig. I, with the "wrench, nut, vent;" the key D, Fig. I, can then be taken out, and the vent-bolt E pushed forward on the cradle, which is withdrawn. To remove the axial vent.

374. Before inserting the vent-bolt, a copper washer F, Fig. I, is placed under the head, and the shank of acorn guide G, Fig. III, is inserted in the vent, which is then passed up the bore on the cradle, pushed into its seat, and secured with the key and nut, which is tightly screwed up. To insert the vent bolt.

375. In 17·72-inch and 16-inch R.M.L. guns, the socket supporting vent is attached to the breech of the gun, but in the 12·5-inch Mark II it is attached to the interior of the shutter frame. Sockets supporting vent.

376. Great care should be taken to prevent powder gas passing under the head of the axial vent between the vent bolt and the vent-hole. Before inserting the vent-bolt, the copper washer, which is placed under the head to prevent escape of gas, should be inspected, and exchanged if defective. The nut that secures the vent-bolt should be carefully tightened up before firing, and after the first round or two further tightened if necessary, as firing may tend to loosen it slightly. The escape of gas, if allowed, will cut through the copper washer and erode the gun, so that a new washer will no longer be effective in preventing erosion, which will increase every round, and eventually necessitate the vent-hole being bushed. The axial vent should be removed, examined, and replaced before and after each day's firing. Care to be taken to prevent powder gas passing under the head of the axial vent.

VI.—INSTRUCTIONS FOR RE-FILLING ELEVATING ARCS AND TRAVERSING ARCS.

377. When the colouring matter in the graduations of elevating arcs and traversing arcs becomes removed by wear, &c., the graduations will be re-filled locally, according to the following instructions. The operation, in the case of arcs in charge of the Royal Artillery, will be carried out by Regimental or Ordnance Artificers.

Digitized by Google

1. Operation.

(*a.*) *Arcs, elevating.*

Remove the arc from the gun.

Clean the graduated surface with turpentine to remove any grease or oil.

Coat the surface with magnetic oxide paint.

When dry, coat the surface with the composition supplied (which consists of patent knotting that has been thickened to the consistency of thick paste by means of dry lampblack carefully worked into the knotting).

Clean off the surface with pumice stone and raw linseed oil.

The pumice stone used should be large, and have a flat surface.

(*b.*) *Arcs, traversing.*

Take up the segments required to be refilled.

Clean the surface with pumice stone and water, and carefully dry it.

Fill the marks with engravers *black* wax, and the figures with engravers *red* wax, both in a powdered state.

Heat the arc until the wax is melted, taking care it does not boil, and allow it to cool gradually.

When cold, rub off any superfluous wax with pumice stone and water, and replace the segments.

Stores in the following proportions will be required for this service, and will be issued on demand :—

2. Stores.

For 5 arcs, elevating.

Paint, magnetic oxide		$\frac{1}{8}$ lb.
Composition		$\frac{1}{8}$,,
Stone, pumice		1 ,,
Oil, linseed, raw		$\frac{1}{4}$ pint.

For 5 segments of arcs, traversing.

Wax, engravers	red	$\frac{1}{3}$ lb.
	black	$\frac{1}{3}$,,
Stone, pumice		2 ,,

VII.—CARRIAGES, R.M.L. HEAVY GUNS.

Garrison sliding carriages.

378. Garrison sliding carriages for R.M.L. guns of 7-inch calibre and upwards are made of wrought iron, known as double-plate or single-plate.

Memorandum of Examination

379. A "Memorandum of Examination," Army Form G 835, similar to that issued with guns, will be issued with each land service BL. and R.M.L. mounting with hydraulic buffers or hydro-pneumatic cylinders. This Memorandum is intended to preserve a complete history

Digitized by Google

of the mounting from the date of its issue from the Royal Arsenal to its final return into store. It is always to be kept with the mounting and returned with it to store. Annual reports of the entries made are to be sent to the Adjutant-General through the General Officer Commanding the district, on 1st April, on Army Form G 832.

Alterations or repairs to be recorded.

380. Any alteration due to change of pattern, or any repairs to the mounting, with the dates thereof, must be recorded on this sheet.

Number of rounds fired and recoil to be recorded.

381. The number of rounds fired, including blank charges, will be entered by the officer in charge at the conclusion of each day's practice, so that an accurate record of the firing may always be kept; and the length of recoil should always be recorded.

Result of examination to be added.

382. The result of any examination while on service will be added by the officer or other examiner who performs the duty, and the rounds totalled up to each date.

If lost duplicate to be obtained.

383. If at any time this Memorandum of Examination be lost or damaged, a duplicate can be obtained from the Director of Artillery (Woolwich), by whom also inside sheets for continuation of the records will be supplied on application.

1. Double-Plate Carriages.

Nature of.

384. Double-plate carriages consist of iron frames, with a plate riveted on each side.

Gear.

385. These carriages differ with respect to their gear; those first constructed, 7, 9, and 12-inch, were fitted with the capstan-head elevating arrangement, which is now only retained for the 7-inch, while the 9-inch* and upwards to 12-inch 25 tons are fitted with the worm-wheel elevating gear, and the 12-inch 35 tons and the 12·5-inch 38 tons are fitted with spur pinion elevating gear.

Loose parts.

386. Loose component parts of these carriages and their gear will be found in the General Lists of Component and Spare Parts, pages 918 to 941, and the following shows the method of attachment :—

Capsquares.

a. The capsquares are interchangeable on both sides of the carriage, and are secured by keys attached by a chain to each bracket. To withdraw the key it must be turned until the feather finds the slot-hole.

Clip-plates.

b. The clip-plates are fitted one on each side through the slots cut in the guides, and are secured each by two bolts through the bottom.

* The 9-inch is now being carried out, and 7-inch carriages will also be fitted with worm wheel elevating gear when mounted on the first line of defence.

Digitized by Google

2. Elevating Gear.

Capstan-head gear.

387. The capstan-head elevating gear is attached in the following manner :—

Putting on the parts.

(*a.*) In putting on the parts, the pinion with spindle, capstan, and clamp will fit on either bracket, but the pinion with spindle must be placed so that the clamp will jam by turning it to the rear.

Method.

(*b.*) The pinion spindle is placed through the bracket from the inside, the capstan placed upon the spindle outside the bracket, boss inwards, the feathers entering the feather-ways in the spindle, and the clamps placed on. These articles are placed similarly on each bracket.

Elevating arc.

(*c.*) The elevating arc may be placed on, either before or after the gun is mounted, but it is more convenient to place it on after the gun is mounted ; it is less likely to be damaged, and better out of the way.

Marking.

(*d.*) The top of each arc is marked "top," and should be placed accordingly.

Pivoting.

(*e.*) The arc is pivoted to the patch on the gun by a screw, which is marked R or L (right or left), and when the screw is screwed home, a keep-pin is placed vertically through it and the patch.

Elevating arcs.

388. For the 7-inch 6½ ton the elevating arcs are put on in the same way as shown above, and the remainder of the gear as follows :—

Pinion bevel wheel, and jamming lever.

(*a.*) Pass spindle of steel pinion and bevel wheel through the bracket from the inside ; place the jamming lever upon the spindle outside the bracket with screw face inwards ; and secure by collar and nuts.

Bevel pinion and shaft.

(*b.*) Remove caps from brackets ; place bevel pinion on the end of shaft, and secure it with collar and screw ; place shaft in position from the rear, and secure the caps.

Hand wheel.

(*c.*) Place hand-wheel on the end of shaft, and secure by collar and nut.

Worm-wheel gear.

389. The worm-wheel elevating gear is fitted to carriages for guns of 12 tons weight and upwards to 12-inch 25 tons.

Component parts of.

(*a.*) It consists of a worm-spindle and worm-wheel placed on the inside of each bracket, and connected with the elevating arc by common toothed pinions.

Working.

(*b.*) The gear is worked by a hand-wheel fixed to the worm-spindle at the rear of the carriage ; no clamps are needed to secure the gun from running down.

Only one side to be used at a time.

390. Elevating gear is fitted on both sides of the carriage ; either set may be used, but not both together, unless absolutely necessary for elevating. The side not

Digitized by Google

in use must be thrown out of gear by turning a stud-key and raising a pawl, when the worm-spindle can be turned out of gear; the pawl is then replaced and secured.

9 and 12-inch compared with 10-inch gear.

391. The 9 and 12-inch elevating gear differs from that of the 10-inch in being provided with an intermediate pinion to throw the worm-wheel clear of the breech of the gun at high elevations.

Putting elevating gear together.

392. The elevating arcs are put on in the same way as the arcs of the capstan-head elevating gear; the remainder of the gear as follows:—

Friction roller.

(*a.*) Pass spindle of friction roller through the bracket, and secure by nut and pin.

Pinions.

(*b.*) Pass spindles of pinions 1st, 2nd, and 3rd motion through the bracket, put on collars, and secure by nuts and pins.

Worm-wheel.

(*c.*) Place worm-wheel on 1st motion spindle, put on collar, and secure by nut. Care must be taken that the worm-wheels, which are right and left, are placed correctly in position, and the short boss of the wheel must be placed next to the pinion.

Worm-spindle bearings.

(*d.*) Remove caps of worm-spindle bearings, open the pawl, place the spindle in bearings, secure caps and pawl.

Hand-wheel.

(*e.*) Place hand-wheel on worm-spindle, put on collar, and secure by nut.

3. Running up Gear.

Fitting.

393. To fit the running up gear to the carriage:—

Front rollers.

(*a*) Place the front rollers in position by inserting the axles, and secure by keys.

Rear rollers.

(*b*) Place rear rollers on the axles, and rest them on the platform in rear of the carriage, raise the drop plates by removing the rear bolts of the two which secure them on each side, push the shaft with rollers evenly forward, keeping the eccentrics uppermost until the axles are fairly in the bearings, secure drop plates and lever sockets, and bolt on the socket to bracket for running back block, to form the centre bearing for the eccentric shaft.

VIII.—CARRIAGES FOR MEDIUM GUNS.

394. The carriages are of wrought iron; "double plate" and "single plate."

1. Double Plate Carriages.

Double-plate carriages.

395. The double-plate carriages are:—7-inch 82 cwt., 40-pr., and 20-pr. R.B.L.

Loose parts.

396. Loose component parts of these carriages and their gear will be found in the General Lists of Component and Spare Parts, pages 974 to 995,

Digitized by Google

Fitting rollers.

397. The rollers will be placed in position by inserting the axles, and secured with nuts and keys, before mounting the carriage on the slide.

Gear, R.B.L. 7-inch.

398. The R.B.L. 7-inch is fitted with the same description of elevating and running-up gear, and the same method is adopted in putting it on as shown at paragraphs 392 and 393.

2. Elevating Gear.

Elevating gear.

399. The elevating gear for 40-pr. and 20-pr. is on the right side.

Elevating arcs.

400. Elevating arcs are put on in the same way as shown at (*c*) paragraph 387, and the remainder of the gear as follows :—

For R.B.L. 40-pr.

Pinions and wheels.

(*a*) Pass spindle of 2nd motion pinion through the bracket from the inside, place spur wheel on spindle outside the bracket, and secure by collar and screw.

(*b*) Pass spindle of 1st motion pinion through the bracket from the outside, and secure it inside the bracket by collar and pin ; place guard over lower part of spur wheel and pinion, and secure it by screws.

Hand-wheel.

(*c*) Place hand-wheel on end of 1st motion spindle outside the bracket, and secure it by collar and nut.

Brake.

(*d*) Place cramp in position in upper part of guard over spur wheel, and secure it with pin and key; place friction plates in position, and secure the upper part of guard by screws.

For R.B.L. 20-pr.

Pinion and hand-wheel.

(*e*) Pass spindle of pinion through the bracket from the inside, place hand-wheel on spindle outside the bracket, and secure by collar and nut.

3. Hydraulic Buffers.

Connecting the buffer.

401. To connect the buffer draw out the piston rod about 10 inches, remove the connecting nut from the piston rod, and run the carriage forward, keeping the rod central until its end projects through the hole in front of slide, and screw on the connecting nut.

Precautions.

402. Before connecting the buffer to the slide the rod should be pushed in and out, to see that it works freely and that the packing gland is not too tight.

Filling the cylinder.

403. The cylinder is filled in the same way as shown at paragraph 418, except that the depth is not required to be taken at the filling hole. The 40-pr. is filled with $1\frac{5}{8}$* gallons, the 20-pr. with $1\frac{1}{2}$* gallons of mineral oil ; $1\frac{1}{4}$* pints is required to be drawn off for the 40- and 20-prs. Oil is withdrawn in the same way as shown at paragraph 418.

* Estimated quantity.

Digitized by Google

4. Compressor Gear.

404. The E.O.C. compressor gear is attached in the following manner :— E.O.C. Compressor gear.

a. To put on the loose parts, the carriage, having been mounted, should be placed with the aperture in the bottom plate over the centre of the diagonal stays of the slide which serve to support the compressor plates. Putting on loose parts.

b. Place the metal nuts, and secure the rocking levers in their respective positions, also secure the compressor plates in position at the bottom of the carriage. Metal nuts and rocking levers.

c. When correctly placed, force the supporting bar into the rear slots, and secure it by the two stops. Supporting bar.

d. Pass the compressor screw through the bearing in the right bracket of the carriage, and at the same time slip on the metal collar as the point of the screw is passed through the bracket. Compressor screw.

e. Press the screw in until the larger screw reaches the compressor nut ; then one man on the outside of the carriage should turn the compressor screw from right to left until the point reaches the adjusting nut, the top end of both rocking levers being kept vertical ; another man inside the carriage should turn the adjusting nut in the same direction as the screw is turned, but the nut should be turned about twice to the screw once : continue this operation until the shoulder of the screw bears on the outside of the bracket, then slide the collar up to the inside of the bracket, and place in the key. Method of placing.

f. Now correct the position of the rocking lever, turning the compressor screw so that the top part of the right rocking lever shall be vertical, and turning the adjusting nut so that the top part of the left rocking lever shall be vertical. Correcting rocking levers.

g. Place the adjusting shaft through the bearing on the left side of the carriage, the feathers in the nut entering the feather-ways in the shaft ; put on the collar, and secure as in the right bracket. Adjusting shaft.

h. Put on the compressor and adjusting levers, the former vertical and the latter at about 45°, and key the adjusting lever. Compressor and adjusting levers.

5. Single-Plate Carriages.

405. The single-plate carriages are :—7-inch 82 cwt. R.B.L. and the 64-pr. 64 cwt. 6 ft. parapet, 64-pr. 64 cwt. 5 ft. 6 in. parapet, 64-pr. 71 cwt., 40-pr. R.M.L., and the 32-pr. S.B. B.L. Single-plate carriages.

406. Loose component parts of these carriages and their gear will be found in the General Lists of Com- Loose parts.

Digitized by Google

ponent and Spare Parts, pages 974 to 995, and the following shows the method of attachment.

Elevating gear.

407. Elevating arcs are put on in the same way as shown at (*c*) paragraph 387, and the remainder of the gear as follows :—

For 6 ft. parapet.

(*a*) The same as described for 7-inch 6½ ton.

For 5 ft. 6 in. parapet.

Friction roller.

(*b*) Pass spindle of friction roller through the bracket from the inside, and secure by nut and pin.

Pinion, spur wheel, and jamming lever.

(*c*) Pass spindle of 2nd motion pinion and spur wheel through the bracket from the inside, place the jamming lever upon the spindle outside the bracket with screw face inwards, and secure by collar and nuts.

Pinion and hand-wheel.

(*d*) Pass spindle of 1st motion pinion through the bracket from the inside, place hand-wheel on spindle outside the bracket, and secure by collar and nut.

Running-up gear.

Carriages R.B.L. 7-inch, R.M.L. 64-pr. 5 ft. 6 in. parapet, and 64-pr. 71 and 58 cwt. are fitted with the same description of running-up gear as shown in paragraph 393.

IX.—SIEGE TRAVELLING CARRIAGES.

408. These carriages are used in garrison service.

1. Hydraulic Buffers.

Hydraulic buffers.

409. The hydraulic buffer is fixed by a connecting bar to the trail of the carriage, and secured to a central pivot on a double-decked platform.

2. Elevating Gear.

Elevating gear.

410. The component parts of this gear will be found in the General List of Component and Spare Parts, pages 974 to 995.

Alternative arrangement used in case of damage to elevating gear.

411. An alternative arrangement is supplied with each 6·3-inch, 6·6-inch, and 8-inch 70 cwt. howitzer carriage to be used in case of damage to the elevating gear, and for shifting the howitzer to or from the travelling trunnion holes.

412. The following is a detail of the parts :—

	6·3-in.	6·6-in.	8-in. 46 cwt.	8-in. 70 cwt.
Beds, elevating and shifting	1	1	—	1
Coins { carriage, No. 3	1	1	—	1
Coins { hand { No. 4	1	1	—	1
Coins { hand { ,, 7	1	1	—	1
Rollers, shifting { No. 3	—	—	—	1
Rollers, shifting { ,, 4	1	1	—	—

Digitized by Google

X.—SLIDES, L.

1. Slides, L, for Double-Plate Carriages.

Traversing slides.

413. Traversing slides for R.M.L. guns of 7-inch calibre and upwards are made of wrought iron, and are constructed as "Casemate" and "Dwarf," the former always A pivot, the latter either A, C, or D.

Traversing gear.

414. Those for 9-inch and upwards are fitted with traversing gear, which is worked at the rear by one winch-handle, or at the side by a winch-handle at each end of a cross shaft. In the later manufacture of case-mate slides the gear is arranged so as to allow of the winch-handles working within the length of the slides.

Parts of slides.

415. Loose component parts for these slides and their gear will be found in the General List of Component and Spare Parts, pages 942 to 973.

To put on loose parts.

To put on these loose parts :—

Slide boards.

(*a*) Place slide board in position on the rear of slide, allowing the studs to fall into the holes in the top of the girders.

Side-arm brackets.

(*b*) Place side-arm brackets in the staples for the purpose on the side of the slide.

Front buffer.

(*c*) Secure front buffer to head of slide by bolts and nuts, place india-rubber rings on spindles pass spindles through, and secure by keys.

Rear buffers.

(*d*) Pass spindles of rear buffers through stops, and secure by keys.

2. Traversing and Running-Back Gear.

Fitting gear to slides.

416. To fit the gear to a slide—

Caps.

(*a*) Remove the caps from all the brackets.

Cross shafts.

(*b*) Place the cross shafts opposite the brackets, the pinions being fixed; lift the whole into position, and secure the caps.

Collar and clutch.

(*c*) Place the collar and clutch pinion on the bollard shaft, insert the end of shaft in the socket of bracket, and secure in rear bracket by cap and collar; pass spur wheel and bollard on to the rear end of the shaft, and secure by keys.

Double pinion.

(*d*) Pass the double-pinion on the spindle gudgeon, and secure by collar and key.

Winch-handle shaft.

(*e*) Place the pinion on the winch-handle shaft, and the shaft in the bracket bearings, key on the pinion, and secure cap and collar.

Clutch lever.

(*f*) Remove the guide bracket, place clutch lever so that the studs rest in groove of pinion, pass pin through lever and bracket, put on collar, and secure by key, refix guide bracket.

Digitized by Google

Trucks. (*g*) Place the trucks in position, those with bevel wheels at the rear, gearing in the pinions of the cross shafts, insert axles, and secure by nuts.

Blocks. (*h*) Place the blocks for the running-back tackle in position, and secure by giving a quarter turn.

Cover. (*i*) Place the cover over the double pinion, with bearings resting on winch-handle shaft, and secure by screws.

Adjustment of chains. **416A.** Care should be taken that the chains of R.M.L. 12·6-inch and 12-inch slides are adjusted to equalize the pull on the sprocket wheels, so as to avoid cross strains and reduce friction in running back.

3. Hydraulic Buffer.

Connecting the buffer to the slide and putting on loose parts. **417.** To secure the buffer on the slide :—

(*a*) Place the buffer, with piston complete, on the front and rear supporting plates, with the cap taking a fair bearing against the rear transom, keeping the screw plug-hole at top, and the straight part of the cover parallel to the bottom of the carriage.

Front and rear bands. (*b*) Secure front and rear bands by bolts and nuts, inserting leather packings between bands and buffer.

Screw. (*c*) Place conical-pointed screw in position through the crown of front band to prevent the buffer from turning.

Connecting the buffer to the carriage. (*d*) Move the carriage to the rear sufficiently to enable a man to get at the bracket on the under side; remove the connecting nut from the piston rod, and draw the latter forward until its end projects through the hole in the bracket, keeping it central in the hole; screw on the connecting nut, and when quite tight take half a turn back to allow a slight play of the bracket between the two nuts.

Precautions. (*e*) Before connecting it to the carriage, the rod should be pushed in and out to see that it works freely, and that the packing gland is not too tight.

Filling the cylinder. **418.** To fill the cylinder, run the carriage up to the stops, take out the screw plug, and rest the gallon measure in the hole; turn off the cock and fill the measure with mineral oil to the gallon mark, then turn the cock and allow the oil to flow into the cylinder, repeat the operation until the quantity required is run in. The quantity of oil used with the buffers of 7-inch 7-ton, 9-inch, 10-inch, 11-inch, and 12-inch 25-ton guns is 12 gallons, which, with the carriage run out, will give a depth at the filling-hole of about 4$\frac{5}{8}$ inches of oil; this depth may be easily tested by a slip of wood. For the buffers of the 12-inch 35-ton

Digitized by Google

and 12·5-inch, the following quantities of oil are required :—

12-inch 35-ton	....	....	11½ gallons.
12·5-inch, 6-ft. recoil, casemate	....	10	„
„ 7-ft. „ „	....	11¼	„
„ 6-ft. „ small port	....	18	„
„ 7-ft. „ „	....	15	„

On these buffers a brass plate is attached giving directions for filling. The oil is withdrawn by means of the front cock, air being let into the cylinder at the same time by the removal of the rear plug.

XI.—SLIDES, L, FOR MEDIUM GUNS.

Running in and out gear.

419. Running in and out gear is on the left side for the 6 ft. parapet slides.

Component parts.

420. Loose component parts for these slides and their gear will be found in the General Lists of Component and Spare Parts, pages 1008 to 1017.

1. Hydraulic Buffers.

Circular hydraulic buffer.

421. The 64-pr. 6 ft. parapet slide is fitted with a circular hydraulic buffer. Of these, but few have been made, and full details concerning them will be found in the handbook.

Wrought-iron caps.

422. The hydraulic buffers (except circular) are fitted with two wrought-iron caps.

Connecting the buffer to the slide and putting on loose parts.

423. The manner of securing the hydraulic buffer to the slide is the same as shown at paragraph 417 (*a* to *e*), with the following exception at (*a*) :—

For the iron slide 64-pr. 5 ft. 6 in. parapet—

Place the buffer with piston complete on the front and rear supporting plates, with the cap taking a fair bearing against the rear transom, keeping the screw plug-hole at top.

For the wood slides—

Place the buffer with piston complete on the centre and rear transom with the cap taking a fair bearing against the rear bracket, keeping the screw plug-hole at top.

Filling the cylinder.

424. The cylinder will be filled in the same way as shown at paragraph 418, except that the quantity of oil used is 5 gallons and the depth at filling-hole as follows :—

R.B.L. 7-inch	....	....	3¾ inches.
R.M.L. 64-pr. 5 ft. 6 in. parapet	....		2⅜ „

2. Compressor Gear.

Compressor gear. To put on the parts.

425. To put these parts on—

(*a*) Place compressor bars in position, with collars between them, by inserting pins, and securing by split keys.

Digitized by Google

(*b*) Pass tripper on spindle, put on collar, and secure by key.

XII.—BEDS FOR HOWITZERS.

426. There are two kinds of beds, one for the 8-inch 46 cwt., and one for either the 6·6-inch or the 6·3-inch howitzers. A detail of component parts for these Beds will be found in the General Lists of Component and Spare Parts, pages 974 to 995.

XIII.—B.L. GUN MOUNTINGS.

B.L. Mountings.

427. B.L. gun mountings are of various types, each with distinctive features requiring special attention, full instructions for which will be found in the handbooks treating of the respective services. For the erection, working, and preservation of disappearing carriages, *see* paragraphs 483 to 564.

427A. The following table shows the quantity of oil required for the buffers and pumps of B.L. mountings :—

Gun.	Mounting.	No. of Buffers.	Quantity.	
			For Buffer.	For Pump.
12-in.	Yoke mounting	2	14½ gallons	—
10-in., Mark III...	Barbette ...	2	23½ ,,	6 gallons.
,, ,, II ...	,, ...	2	25 ,,	6 ,,
,, ,, I ...	,, (C and D pivot).	2	*18½ ,,	—
9·2-in. ,, II ...	Barbette ...	2	25 ,,	6 gallons.
,, ,, I ...	,, ...	1	* 9½ ,,	—
8-in. ,, I ...	,, ...	1	2¾ ,,	—
6-in. ,, I ...	,, ...	1	11½ quarts	—
,, ,, I ...	V.C.P.	2	13½ ,,	—
4·7-in., Q.F. ...	Garrison ...	1	* 5 ,,	—

XIV.—CARE AND PRESERVATION OF CARRIAGES AND SLIDES, L.

1. General Instructions.

Iron carriages and slides.

428. Iron carriages and slides, L, of every description require special care to preserve them from the effects of the weather, and to keep them in working order ; otherwise they will be deteriorated by rust, and the working parts become so corroded as to induce irregularity in action, and be difficult to work. Particular attention will be paid to the following instructions, which have been framed to apply generally to all mountings.

Buffers and gear.

429. Detailed instructions with reference to buffers and gear of R.M.L. 12-inch and 12·5-inch and H.P. mountings, will be found in the handbooks.

* For buffer and tank.

Digitized by Google

Gear kept clean and in working order.

430. When mountings are not frequently used, the movable parts of the elevating and other gears will be removed and placed in store, where the bright parts of the ironwork will be well coated with Field's grease No. 3, to preserve them from rust. These parts will be thoroughly cleaned and placed in position at least once in three months, to see that they are in proper working order. All other gears should be worked once a week, to ensure their being in a working condition.

Paint rubbed off.

431. If the paint is rubbed off any part of the mounting, the place should be patched over as soon as possible to prevent rust.

Cleaning and lubricating.

432. A thorough cleaning and lubricating of all standing working parts must take place once a month. In this cleaning all clotted grease must be removed where visible, by scraping, and the parts wiped with an oily rag. Where mountings are much exposed and liable to accumulate dust or sand, they should not be left with much grease or oil upon them, but only sufficient to prevent rust, for which a very slight film will suffice.

Fresh lubricant, how applied.

433. Whenever and wherever fresh lubricant is applied the old should first be wiped or scraped off, and the parts well worked to distribute the fresh lubricant before leaving them.

Gear under slide.

434. The gear hidden under the slide can be examined as to condition by a man lying on his back while the slide is traversed over him.

Glassy substance forming between carriage and slides.

435. It has been found, especially in exposed positions, that a hard glassy cake of oil and sand, &c., will sometimes form between the carriage and slide, which is likely to escape observation, being of a semi-transparent nature, and which induces violent recoils from the very slippery surface it presents. Such a skin has to be hammered off; its formation is best guarded against by leaving as little oil on the sliding surfaces as possible, when not in use.

When not in use position to be changed.

436. When not in use, the position of the carriage and slide will be frequently changed to prevent impressions on the rollers, trucks and racers, and to keep the sliding faces clear.

During practice oily cloth to be used.

437. During practice the top of the slides of mountings not on live rollers should be occasionally rubbed with a slightly oily cloth to prevent seizure.

Precautions before firing or drill.

438. Before firing, or drill, care should be taken that all nuts and screws are properly tightened up; that all working parts are in proper gear; and that all friction cones and brakes are accurately adjusted, and are not jammed. Particular attention should be paid to the clip plates, the bolts of which tend to stretch, and throw undue strain on the guide plates.

Digitized by Google

Replacing a nut or screw.

439. If a nut or screw be removed it should be slightly oiled before being replaced, and a few turns given to it by hand before using the spanner, to prevent damage by the threads crossing. A burr on the threads of a screw will prevent it being screwed home; the burr can be easily removed by means of a file. A hammer should never be used to tighten up screws or nuts.

Care when removing or adjusting gear.

440. Particular attention will be observed when removing or adjusting any gear not to indent or damage the component parts by rough usage. A hammer should never be used unless with a piece of wood or brass to transmit the blow.

Rollers and trucks.

441. Rollers and trucks will be removed, and the axles properly cleaned and greased before replacing. The front trucks are removed by running the carriage back and lifting the front of the slide by hydraulic jacks, sufficiently high to take the weight off the trucks; care will be taken to block up the slide before removing the axles. For the rear trucks, run the carriage up, place the jacks under the rear block plate, and proceed as for the front trucks. Particular care must be observed when replacing conical trucks that they are in the correct position, viz.:—with the smallest diameter towards the pivot.

Truck brackets.

442. The truck brackets of wood slides must be adjusted so that the trucks are in the right position with reference to the curve of racer, *i.e.*, with the axles truly radial, otherwise the flanges will bite the racer and cause stiffness in traversing.

Racers.

443. Racers should be scraped and cleaned, and well greased at the sides with Field's grease where the truck flanges bite, to render traversing easy. The inner flanges of the trucks and all traversing racks should also be cleaned and well greased. In mountings without traversing racks, the top of the racers should be kept free of grease.

Pivots.

443A. Care must be taken that the pivots of mountings do not cause the truck flanges to bear against the racers. Where an error in the position of the pivot or pivot plates appears to exist, it should be at once reported.

Friction gear.

444. The clamping arrangements or friction cones of elevating gear, brake drums, and the discs of friction clutches, will be cleaned and slightly oiled to prevent seizing.

Differential brake gear.

445. Differential brake gear will be regulated by the adjusting screws, until the tension of the brake bands is just sufficient to retain the carriage on recoil, and prevent it running out until the bands are slackened by the levers.

Jamming levers and friction cones.

446. Jamming levers and friction cones of elevating gear will be tightened up by means of the adjusting nuts, so as to allow a slight slip in the gear on firing.

Digitized by Google

447. The plates and bars of the compressor and preventor gears will on no account be greased or oiled, but should be kept free from rust by scraping, as compression adjusted with a scale of rust between the plates may lead to a violent action after the first round. Compressor and preventor gears.

448. The adjusting lever should be set up after each round, for the first three or four rounds, so that the removal of any scale or rust on the bars will not vary the results. Adjusting lever.

449. In replacing the preventor gear particular care must be taken to place the lever in its correct position to ensure proper working. For this purpose a note must be taken of the number on the toothed collar to which the arrow on the lever points when the lever is removed. Replacing preventor gear.

450. Compressor gear is regulated by setting up the adjusting lever until, by the exertion of one man, the compressor lever can be just forced past the stop on the arc. Regulating compressor gear.

451. Iron pointed levers and their sockets must never be oiled or greased, but simply cleaned to prevent rust. Iron-pointed levers.

452. In lubricating, the lubricating holes will be cleaned out with a wire and filled with oil, care being taken to replace the small screws, the heads of which must be kept bright so as to be readily seen. A list of the oil holes in the mounting, stating their position and how access is obtained to them, is to be hung up in each emplacement, and none must be neglected. These lists can be obtained on demand; the nature of the mounting being specified. After filling the oil holes the parts should be worked backwards and forwards until the oil shows on the shafting, fresh applications of oil being made if necessary. Lubricating holes.

453. Carriages with rollers permanently in action should have the roller axles removed, cleaned, and lubricated. The axles can be taken out one by one. Live rollers.

454. The teeth of all pinions and toothed wheels should be greased. Toothed wheels.

455. G. S. jacks should, when not in use, be placed in the "Frame, store, hydraulic jack," and frequently released and pumped up to maintain a moderate pressure on the leather packings; on release, the jack should descend to its lowest point. G.S. jacks.

456. Hydraulic buffers should be carefully examined before firing or drill, to see that the cylinders contain the requisite quantity of fluid marked on the inscription plate, that there is no leakage at the glands, and that the piston rods are properly connected. Hydraulic buffers.

457. If a buffer leaks at the gland, and tightening up the latter does not stop the leak, the packing will be renewed. Materials for packing are detailed in Appendix VII (page 692). The buffer will not be removed, but will be left filled and periodically examined (*see* paragraph 91.) To remedy leakage.

Digitized by Google

Oil drippings not to be used.

458. Any drippings of oil from the buffer, collected in the drip pans attached to the carriage or slide, should on no account be used on any part of the machinery of the mountings or on any of the gun fittings.

R.M.L. carriages and slides.

459. R.M.L. carriages and slides will be dismounted and the whole of the gear removed by ordnance artificers at the periodical painting, and all parts cleaned, keys adjusted, bolts and nuts tightened, lubricating holes thoroughly cleaned, the trunnion holes greased and all parts properly lubricated, and any slight defect made good, before reassembling the parts.

B.L. mountings.

460. B.L. mountings will require the same overhaul, but the period may be extended.

Broken parts.

461. Whenever any parts are found broken, defective, or deficient, which cannot be renewed by the artificers, fresh parts should be demanded at once. Any damage occurring at drill, or practice, should be at once reported with a view to its being made good without delay.

Marks, &c., to be quoted in reports.

462. In all correspondence and reports relating to carriages and slides, their exact natures, marks, and register numbers should be quoted.

Report of examination.

463. The Inspector of Ordnance Machinery reports quarterly in his district. Where no Inspector of Ordnance Machinery exists, the mountings are to be examined every six months by the ordnance artificers, who will prepare a report of first examination, to be forwarded, through the Officer Commanding Royal Artillery, to the Deputy Adjutant-General, Royal Artillery, the second examination of the year to be in the presence of the Serjeant-Major Ordnance Artificer who reports independently to the Commissary-General of Ordnance.

Examination of mountings in permanent works.

464. When examining mountings in permanent works particular attention is to be paid to the accuracy of level of the racers—especially on sea fronts. It is necessary that there should be no alteration in elevation, as the slide is traversed from side to side. To ascertain whether this condition holds good, a spirit level should be placed

(1) lengthways on the slide, and

(2) crosswise on the slide,

and the slide traversed from extreme right to extreme left and *vice versâ*; the bubble should remain stationary throughout, and the mounting bear on all its rollers continually.

Adjustment of degree scales.

465. The adjustment of the degree scales of index plates, graduated arcs, or elevation indicators, should also be checked. These should read at zero on the degree scale when the axis of the gun is horizontal. The horizontal position of the gun can be obtained by a spirit

Digitized by Google

level resting on a straight edge in the bore or on the quadrant plane prepared on the breech of the gun.

Copy of instructions to be displayed.

466. A copy of these instructions attached to a board will be hung up in each fort or battery where there are iron carriages. Copies for this purpose, printed on Army Form G 907, can be obtained on demand.

2. Packing for Transport.

Packing fittings.

467. Except the capsquares, friction roller, and centre bearing for the eccentric shaft, all the fittings, together with the metal rollers, are removed and packed in a case. The same case may also take fittings of the slide, including traversing gear. The kind of gear packed, the nature of gun for which the carriage and slide is intended, and the register number of each of the latter, will be painted upon the case.

Wood blocks to replace rollers and flanged feet.

468. Wood blocks are placed between the plates of the carriage in the position of the rollers, those in front secured by the roller axles, those in rear by wood pins. Similar blocks are placed in the flanged feet of the slide and retained by the truck axles.

Trucks.

469. The trucks, if fitted for gear, are packed in a case; if not so fitted, they remain loose.

Buffer.

470. The buffer is left in its position on the slide, a wood block being secured over the piston-rod to keep the piston run back and to protect the end of the rod.

Shafts foot-boards, and side-steps.

471. The long shaft of the traversing gear is lashed beneath the slide; short shafts are packed in the case; foot-boards remain in position; side steps are lashed on.

Compressor bars.

472. If the slide is fitted with compressor bars, they remain in position and are secured by wooden blocks over them fitting between the sides of the slide, and so formed as to jam them all together.

3. Scraping.

Repairs.

473. Previous to being scraped and painted all carriages and slides will be examined, as directed in paragraph 243, and, if necessary, repaired.

Scraping and cleaning to be done well.

474. Wrought-iron carriages and slides require a great deal of scraping and cleaning, especially if mounted in open works. Before proceeding to paint them they must be stripped of all their loose parts, and all the old unsound paint, rust, and corroded oil or grease must be thoroughly removed.

Implements to be used.

475. The implements to be used in scraping are old swords, triangular steel scrapers, and scrapers made from old files.

What is meant by scraping.

476. Scraping consists in going lightly over the surface with the scrapers, removing all blisters and loose paint,

Digitized by Google

and forming a smooth surface for the new coat of paint. Care will be taken not to break into the old coat where it is found to be sound.

4. Painting.

Bearings or gearing parts not to be painted.

477. In repainting carriages and slides care will be taken not to paint any bearings or gearing parts: for instance, soles of trucks, teeth of pinions and wheels, the upper surfaces of the slide on which the carriage slides, the sliding surfaces of the carriage, &c. The carriages and slides will be thoroughly dry when painted.

Racers, racks, &c.

478. Racers, racks, soles of trucks, and pivots, will not be painted, but will be rubbed occasionally with an oiled wiper, to prevent rust. Pivot blocks will be painted at the same time as the slides.

First coat.

479. The first coat or patching will be laid on lightly in those places which have been laid bare in the repairs, or by scraping. The stopping will be done after the first coat of paint has become set, as in the case of wood carriages.

Second coat.

480. The second coat will be given after the stopping has been completed. It will be applied lightly and carefully finished off.

Time and working pay.

481. The time and working pay allowed for scraping, cleaning, and painting are given in Table H, page 630.

Quantity of paint.

482. The quantity of paint required for painting wrought-iron carriages and slides is given in Table G, page 627, and for marking in Part 1, page 156.

XV.—INSTRUCTIONS FOR THE ERECTION, WORKING, AND PRESERVATION OF DISAPPEARING MOUNTINGS.

1. Erection and Working.

Examination of racers and rollers before mounting.

483. Before the erection of the mounting is commenced, the following points must be attended to:—

(*a.*) The racer should be perfectly level.

(*b.*) The roller paths (upper and lower), teeth of traversing rack, underside of clip ring, and rollers should be quite clean, and free from burrs.

(*c.*) It should be seen that the roller ring has not been bent.

484. The rollers and axles must be oiled, placed in the roller ring, and the ring given two or three revolutions on the roller path, before putting on the mounting, to ascertain whether it runs truly, and that every roller bears continually. Two to four men (according to the calibre of gun) should be able to move it freely.

Mounting.

485. The roller path on the underside of the mounting having been cleaned, oiled, and any burrs removed, the mounting should be lifted into position.

Digitized by Google

486. The traversing gear should next be attached, and one or two revolutions made to see that the mounting traverses freely. The truth of the racer may be tested here by a spirit level placed on any part of the mounting. As the mounting is revolved, the bubble should remain stationary. The brackets for the pillars supporting the shield, and front and rear holding-down clips having been added, another revolution should be made to ascertain that the clips do not bind on the clip ring. Two men should traverse a 9·2-inch with ease. The chequered foot plates should then be placed in position, and the lever handle of the raising valve keyed on its shaft. Traversing gear attached and tested

487. The liquid for charging the cylinder is composed of the following ingredients, and in the proportions shown:— Composition of liquid in cylinder.

Methylated spirits	7	gallons.
Distilled water	3¼	„
Mineral oil	¼	„
Carbonate of soda	250	grains.

and no other than the authorised liquid should be employed. The cylinder for the 6-inch carriage is issued charged.

488. The following quantity of the liquid will be required:— Quantity of liquid.

10-inch	Mark	II	206	gallons.
10 „	„	I	70	„
9·2 „	„	II	153	„
9·2 „	„	I	40	„
6 „	„	IV	26	„
6 „	„	III	26	„
6 „	„	II and II*	12½	„
6 „	„	I	14	„

489. Before filling, attach the indicator connection to the filling cock on the cylinder, and fix the indicator in its place, taking care that it is cut off by screwing up the valve of the connection, as otherwise the indicator may be injured by the pumping. It should stand within 15° of the vertical. Attach the copper pipe to the connection. Indicator attached.

490. To fill the cylinder (1) open the inlet at the connection, the raising valve, and the plug at the top of the cylinder, close the water-level cock, and pump liquid till it flows out at the top plug;† (2) close the top plug and Mode of filling cylinder.

† NOTE.—In pumping liquid with the "Pump, air, double," the pump cisterns must be kept full, and the valve for liquid opened; the strokes must be *slow and steady*, otherwise air may also be drawn in. In pumping air the liquid valve is closed, and the strokes should be quick and jerky.

Digitized by Google

raising valve, and pump liquid till it blows out in a spray from the water-level cock—which should be opened every now and then to ascertain whether the liquid has risen sufficiently; (3) change the pump to air, and pump air till the required pressure is shown on the indicator. The pumping should be stopped while the indicator is open to the pressure.

Working pressures.

491. The working pressures of the different natures are as follows:—

		lb. per □″		lb. per □″
10-inch, Mark I	Gun up	800	Gun down	1,600
9·2 „ „ I		775		1,550
6 „ „ I		570		1,350
6 „ „ II to IV		590		1,250

492. For taking these pressures the elevator is "up" when it will rise no further with the raising valve open. Care should be taken not to allow the stops on the ram and cylinder (inside) to come into contact with force, or they may be burred, and the subsequent recoils and elevations affected. The raising valve should therefore be cut off gradually as the ram nears the end of its stroke; this is shown by the arrow heads on the elevator and bracket.

In the "up" position two (pencil) marks should be made on the ram, one level with the top of the gland, and the other at a distance from it as follows:—

10-inch mounting I	46 inches.
9·2 „ „ I	42 „
6 „ „ II	35 „
6 „ „ III and IV	36 „

The upper mark will show the "down" position, and should be used as the datum (so long as the gland is undisturbed), for measuring the recoils, pressure, and water level.

Cut-off chain.

493. It is advisable to adjust the cut-off chain before mounting the gun, though this can be done at any time, and it is adjusted before issue. It should be sufficiently slack to allow the elevator to come fully "up," but without much jerk. The completing of the closing of the valve should be done by hand before pumping down or firing.

Pumping.

494. Pump down to the buffer stops, and secure the elevator by the holding-down links before mounting the gun.

Mounting gun and shield.

495. The gun may now be mounted, the elevating rods fixed in position, and the shield put on. The shield segments of 9·2 and 10-inch have lifting loops placed at the

Digitized by Google

centre of gravity; they are turned with the nut on top for housing. The overlapping flanges of these segments should be observed, as the segments must go on in a certain definite rotation.

Elevating arcs and pinions.

496. Particular care must be taken that the elevating arcs and pinions are put together correctly, as otherwise damage will occur. The distance between the centre of the trunnion of the crosshead and the centre of the pin of the elevating arc must be the same on both sides. The correct position of the elevating arcs and pinions for gearing together is indicated by scribed lines on the elevating shaft pinions and arcs, and the two pinions are stamped "Right" and "Left" in addition; the lines on either side should coincide in one position.

Graduations.

497. The degrees marked on the arc guides for quadrant elevation are graduated so as to be correct for the "up" position, and should be checked at zero and maximum elevation and depression with a long base clinometer on the quadrant plane of the gun. The graduations are only correct when the elevator is fully "up," and the gun should never be fired unless it is so. To ensure this, the cut-off chain should be sufficiently slack to allow a slight sound of contact between the stops in the cylinder to be audible to the No. at the raising lever.

Tightening of elevating gear.

498. The friction cone of the "equalising" gear should be tightened just sufficiently to prevent the elevating arcs running down of themselves when the gun is up. This will be arrived at by trial. The cone or plates of the elevating gear should be tightened if there is much slip of the elevating arc on firing. A slip of 3 or 4 inches of the arc should be allowed. Where the arrangement consists of alternate plates, care must be taken in putting them together that steel does not come against steel, and that the faces of the plates are free from burrs, &c.

Raising the gun.

499. Before raising the gun, clear away any covering plates from the shield. For the first time the gun should be put up slowly and carefully, and the cut-off gear re-adjusted for length if necessary. It is always necessary to make sure of the closing before firing, by pulling over the lever by hand when the gun is up.

Release of air in cylinder.

500. The liquid of the cylinder while in the air chambers becomes aërated to a certain extent, and when it passes into the inner cylinder the air is given off and collects at the top. This should be freed by loosening the plug on top of cylinder every now and then during the firing, otherwise the recoil may become excessive. The presence of too much air in the inner cylinder may be recognised by the ram "cushioning" at the end of its stroke, instead of coming to a dead stand.

Digitized by Google

Lowering guns.

501. In using the lowering pump, the pump handle (which is suspended from the shield when out of use) is put into working position and pinned there. Four or more men are required, according to the calibre of the gun. Care should be taken to see that the gun commences to descend as soon as pumping begins, as it sometimes happens that the gun remains up, owing to friction in the ram gland while the pump is drawing the supporting liquid from under the ram, in which case the gun suddenly falls with violence, and damage is done. If therefore the gun does not fall at each stroke, it should be hauled back with tackle, pumping meanwhile being continued. In those mountings which have the suction pipes of the lowering pump entering the top of the cylinder, the pump will not as a rule begin to act until the top plug has been opened sufficiently to release any air at the top of the cylinder. This plug should not be unscrewed too far, or it may blow out and let down the gun. When the pumping down is finished, the pump handle should be removed.

Pumping down is generally made easier by attaching ropes to the handle on either side, on which the numbers may pull, instead of working direct on the handle.

Leak.

502. If any leak is discovered, it should be dealt with before the gun is fired as described in the instructions for "Care and Preservation." If no leak is observable the firing may commence.

Recoils on ram.

503. After first erecting, the firing must commence with a $\frac{1}{2}$ charge (with projectile), the recoil on the ram being carefully noted.

The recoils, measured on the ram, should not exceed :—

10-inch	I	$\frac{1}{2}$ charge	....	21 inches
		full „	....	45 „
9·2 „	I	$\frac{1}{2}$ charge	....	21 „
		full „	....	41 „
6 „	II	$\frac{1}{2}$ charge	....	20 „
		full „	....	35 „
6 „	III and IV	$\frac{1}{2}$ charge	....	23 „
		full „	....	36 „

504. If the recoil appears too great with the smaller charges, the valves must be adjusted as described below. As a rule the recoil with full charge may be short of the amount shown above, and care must be taken that the elevator does not come hard down upon the buffers when recoiling, as there is danger of the gun fouling the cross head or front transom of the elevator. Different marks of gun have different outlines ; in mounting the gun for the first time therefore the clearances there should be looked to. The mountings are designed to bring the gun

Digitized by Google

(with full recoil) to a constant elevation which is unaffected by the position of the elevating arcs, and the height of the buffers is intended to be so regulated as to give this position; but in practice these conditions are not always attainable, and the buffers should not be looked to as a guide. The "down" position as defined above by measurements on the ram, is the proper outside limit of recoil, and it should bring the elevating rods to their "dead centre." But even this condition is not always attained, and it should be borne in mind that it is the worst position of the elevating arcs when the gun is "down" that must be looked to in checking the clearances.

505. The position of the elevating band on the gun is of importance in connection with this (and also with reference to the accuracy of the graduations on the arc), and this position should be checked. The distance of the centre of the pivots from the centres of the trunnions should be as follows:— Elevating band.

Distance of pivot from trunnions.

	Perpendicular to Gun axis.	Parallel to Gun axis.
10-inch Mark I mounting	17 inches	70 inches
9·2 „ „ I „	15·5 „	65·5 „
6 „ „ II & IV „	11·28„	47 „

2. Care and Preservation.

Adjustment of Recoil Valve or Valves. (Plate 1.)

506. When the recoil obtained is not satisfactory, it is adjusted by altering the play of the recoil valve or valves. All valves are set before the mounting is issued. They should not be altered unless absolutely necessary. When once adjusted for a particular charge, mark of gun, and nature of liquid, any continuance of abnormal recoils will probably be due to incorrect air pressure, and the accuracy of the indicator or the liquid level must be suspected first; at the same time an alteration *may* have taken place in the condition of the valves, necessitating an altered setting; before an alteration is made under these circumstances, the valves should be carefully examined, and anything calling for remark reported. Alterations.

507. No permanent alteration should be made in the pressure laid down, which should always be worked to, but care should be taken that the pressure indicator is giving the correct record. This can be tested by the dead-weight test gauge supplied. In case of emergency extra pressure may be pumped in to check a tendency to excessive recoil, should such develop itself, and it is desirable to continue firing, but steps must be taken on the first opportunity to enable the service pressure to be resorted to. Loss of liquid will affect the recoil, and the Alteration in pressure.

Digitized by Google

liquid level must always be maintained. No definite effect in checking the recoil need be expected by any change of pressure under 100 lb. per square inch.

Access to valves.

508. The recoil valves are situated inside the cylinder at the bottom, and to get at them the pressure must be let out at the filling plug or water level cock, and the bottom centre plug* removed, which bares the head of the valve.

Removal of valve.

509. It is not necessary to remove the valve itself, except to renew the leather, or clear it of grit in case of a leak.

Adjustment of valves.

510. To adjust the valve or valves (Fig. I†), unscrew the stop nut (*c*), and the keep screw (*d*), turn the nut (*b*) until the keep screw comes opposite to the next slot in the spindle, and screw in the keep screw and stop nut again. Detailed information as to the difference made in recoil is stamped on each valve, together with the amount of the normal lift of the valve with which it is issued. This is necessary as a datum, since the adjusting nut can be turned round till it comes off. If it becomes necessary to remove this nut, the opening allowed to the valve after resetting should be measured. The actual amount of lift given is best measured by filing down a slip of metal till it fits the gap left between *b* and *a* where the coils of the spring give access, and then measuring the thickness of the slip.

Firing after alterations.

511. After any alteration or adjustment of the recoil valves, the firing must commence with a ½ charge, as stated in paragraph 503.

Adjustment of raising Valve and repacking its Gland.
(Plate I, Fig. II†.)

512. The gland of the spindle of the raising valve can be repacked without blowing out the compressed air from the recoil cylinder. If, however, there is a leak from the outer chamber to the inner through the raising valve itself, the pressure must be let out before the valve spindle (*a*) or its seating can be looked to.

513. To repack the gland, fasten the elevator down by the clips, and take off the nut (*e*) on the end of the valve spindle. Remove the stop nut from the end of the rack (*f*), pull out the rack and remove the bracket (*g*) and toothed wheel (*d*) from the valve spindle. The gland nut (*c*) can now be unscrewed, and the gland repacked, care being taken not to disturb the gland box unless for the purpose of replacing the leather packing (*l*), when the pressure must be let out, and the gland box screwed up

* This is in the 6-inch, which has but one valve. The 9·2 inch and upwards have more grouped round the centre plug. With these all the valves must be altered together and set alike. Corresponding slots in the spindle are figured alike.

† See page 569.

Digitized by Google

Carriage, Garrison, Disappearing.

6 Inch B.L. Marks II to IV.

Raising Valve.

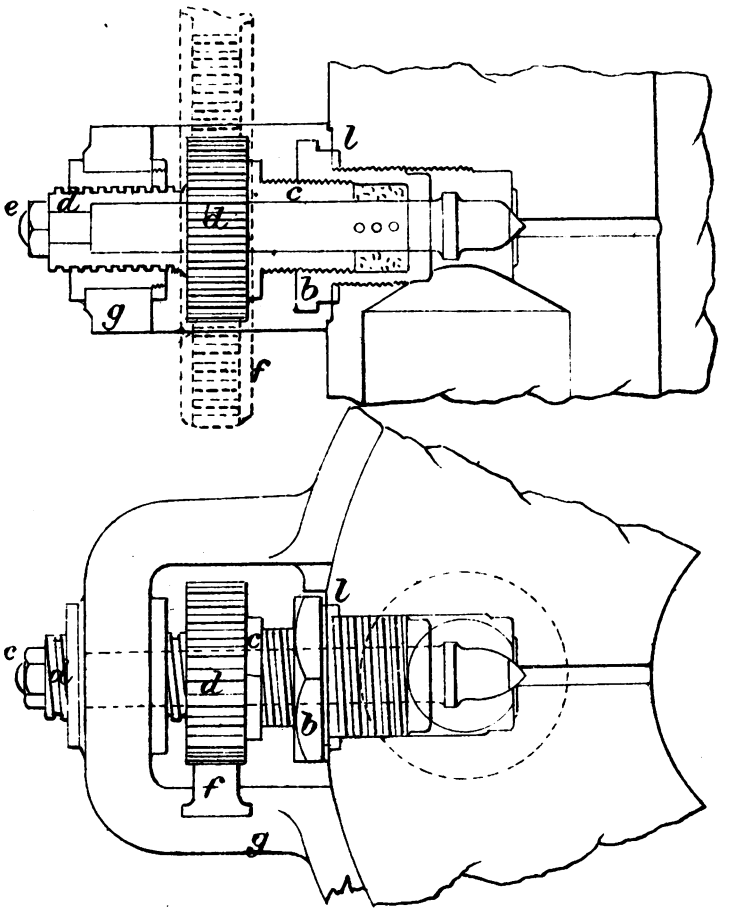

Fig. II.

l. Leather washers.

Digitized by Google

Jones & Co Ltd Lith 63, Carter Lane. 3521.10.90.

Digitized by Google

CARRIAGE, GARRISON, DISAPPEARING.

6 INCH B.L. MARKS II TO IV.

RECOIL VALVE.

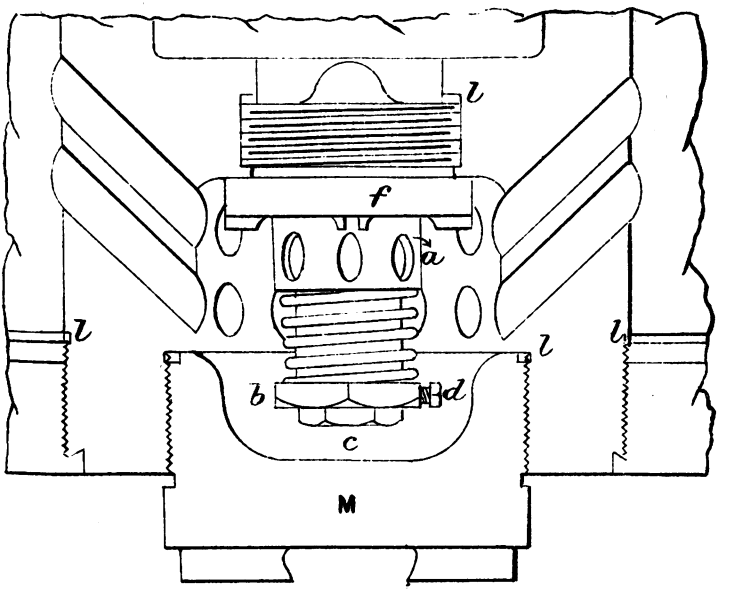

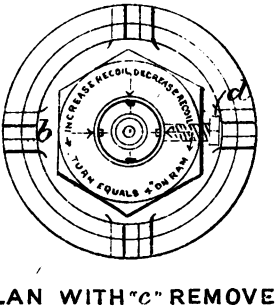

PLAN WITH "C" REMOVED.

Fig. I.

Digitized by Google

Judd & Co Ltd. Lith 63, Carter Lane, 1921.

Digitized by Google

again before the packing of the gland commences. In doing this care should be taken not to use too much force, as the gland box is rather weak. In replacing the gland nut (*c*) it should not be more than a quarter of an inch from "home."

Replace the toothed pinion, bracket, and nut; pinch the top of the pinion round from left to right until it can be moved no longer (taking care that it is not bearing against the gland nut), which will show that the valve is bearing on its seating; then pinch it back 38* teeth from the right to left, drop in the rack, and screw in the stop at the end of it; connect up the link in the cut off shaft to the top of rack. Replace the cover of the bracket, release the holding down clips of the elevator, and let the gun rise carefully. When the gun is "up" readjust the cut-off chain.

Leakage.

Signs of leakage.

514. Leakage may be internal or external; if the former, it will probably show itself in a tendency of the gun to rise without opening the raising valve; if external, a dripping will generally betray its whereabouts.

Locality.

515. Internal leaks may occur at (1) the seat of the raising valve, (2) the recoil valve (generally from grit), (3) the leather joint of the recoil valve.

516. If there is loss of pressure with no sign of dripping, the most probable place is the water level cock; but the leak may be into the ram at the bottom plug. The gun must be skidded up to examine this, and the ram withdrawn and examined to ascertain if it contains water. This leak will only occur during firing, or when the weight of the gun is on the ram.

Removal of liquid.

517. If it is necessary to renew the leather joint of a recoil valve or bottom plug, or examine a recoil valve, the pressure must be let out. In order not to waste any liquid in doing this, disconnect the nozzle of the pipe leading into the steel plug in the bottom of the cylinder, when most of the liquid can be caught in pails, then carefully remove the centre bottom plug, putting a pail under it to catch the remaining liquid.

Recoil ram gland.

518. If any considerable leakage occurs at the top of the cylinder, it should be stopped at once—if allowed to continue the recoils will soon become too great from loss of liquid. When the glands are in proper working order there should be no leak at all. By noting where the liquid issues, it will be known whether to screw down the outer gland (or cylinder cover) or the inner gland. Too

* With the 6-inch the correct amount for any nature can be ascertained by trial to suit the cut off chain.

Digitized by Google

much force cannot be applied in screwing down those parts. Lengthening levers are required on the spanners, and if the spanners are found too weak they should be returned and fresh ones demanded. But in screwing down the inner gland it should not be driven lower than to bring its slots level with the outer gland; if it will not hold the pressure at this, it must be repacked with an extra layer of packing. This packing, when in good condition, is sufficient of itself to prevent escape past the ram of a 6-inch without the assistance of the U or L leather below it, and it is comparatively easily renewed. But if it becomes necessary to renew either of the leathers, the ram must be detached from the crosshead.

Skidding up of gun.

519. Before removing any of the glands the gun must be raised and skidded up. If only the inner gland is to be unscrewed, the skidding should not be omitted, as the leather may fail to hold the pressure. The safest plan is to place suitable skidding across the opening of the shield, and pump the gun on to it. A more expeditious method for the heavier natures, and attended with less exposure, is to strut the cheeks of the elevator with skids placed against the buffer brackets, but this must be undertaken with every precaution to prevent the skids slipping.

Detaching ram from crosshead.

520. When it is necessary to detach the ram from the crosshead, secure the cylinder by lashing to prevent it swinging when free (or the pumping gear, &c., will be damaged), and remove the nut on top of the crosshead. In the 6-inch Marks I and II, and in the 9·2 and 10-inch the cylinder is top heavy; in the 6-inch Marks III and IV, the weight is below the trunnions; arrangements must be made accordingly.

521. When the nut is off, and the weight of the cylinder properly taken by the lashing, &c., the ram can be pumped down by the lowering pump. When it is clear of the crosshead the glands can be removed and the leathers replaced from store. Lifting loops are supplied to raise the cylinder covers of the 9·2 and 10-inch, and the metal ring over the packing. The former are also available for the cap squares of the mountings. Great care should be taken in putting in a U leather to see that the edges enter properly without being damaged. After replacing all the glands and packings, open the raising valve gently, and the ram should then enter the crosshead again, when it may be secured by the nut. Allow the gun to rise, and remove the skidding.

Rope packing.

522. The rope packing is the Service "hydraulic;"* it is woven square in section, with rubber core, and supplied

* Asbestos packing should not be used, it is too friable.

Digitized by Google

by length. For use, it is cut into lengths so as to form rings (with the ends butting) which will just enter the gland box. Not less than three are required to form a packing, which are inserted one above the other so as to break joint. The packing should be well greased with hot tallow before use.

Expanding U leathers.

523. If from remaining long in store the U leathers become at all shrunk, they should be placed in luke warm water to expand them before being put into the mounting.

Discovery of leakage.

524. As regards leakage at the ram gland, it should be observed that this should only occur while the gun is in motion, or with the weight resting on the ram. If it happens continuously while the gun is resting on the buffers, it will either be because the raising valve does not close, or because the recoil valve leaks. If opening the top plug on forcing over the lever of the raising valve does not stop the leak at the gland, the fault may be with the recoil valve (or valves); in either case there will generally be a tendency for the gun to rise, and tightening up the ram gland above will of course not stop the internal leak, which should be seen to.

Testing ram gland, packing, and air plug.

525. When the recoil and raising valves are working properly, the best way to test the packing of the ram gland is to fasten the gun down by the holding down clips, and open the raising valve, when any escape will become apparent. The same test applies to the air plug in top of cylinder, which before firing should be screwed home, and be airtight. Without these precautions an escape of air at the top of the cylinder during firing is likely to be missed, and the pressure be lost unawares.

Lowering pump.

526. The lowering pump has a gland at each end, and a piston with packing. To pack the piston, the parallel link must be disconnected, and the upper guide bracket of pump rod removed. To renew the leather of the upper gland, the upper end of the piston rod must be unscrewed; in doing this, the rod should be held by the hexagon and the upper end turned, so that the piston may not be turned in the pump cylinder.

527. The three pump packings can be attended to without blowing the air out of the recoil cylinder, provided the gun is down on the buffers, as there is then no pressure in the pump, the weight of the gun being taken by the buffers, and not by the recoil ram. To make sure that the pressure is removed from the ram, open the air plug at the top of the cylinder. The pressure from the air chambers of the recoil cylinder tends to shut the delivery valves of the pump, so that pressure should not pass to the pump, except as with the ram gland, but the fact that these valves themselves may leak should not be

Digitized by Google

lost sight of. Any leak from the pump or its connecting pipes should carry liquid with it.

General Directions.

Care and preservation.

528. Constant attention should be paid to the care and preservation of these mountings, and officers having such in their charge should make themselves conversant with the mechanism and various details of the mountings.

Mountings worked weekly.

529. The gun is to be raised to firing position and pumped down again each week.

Cleanliness of cylinder, &c., essential.

530. The mounting should be kept thoroughly clean and carefully examined each week. It is most important that grit and dust should be prevented from entering the cylinder. After pumping the gun down for the last time at drill or at weekly inspection, and after the last round of practice, a well-oiled twist of tow should be bound tightly round the ram close to the bouche of the cylinder, and left there till the next working, when it should be carefully removed with the dust adhering to it. Any grit or dust found on the ram during the firing should be at once removed.

Preservation of leathers.

531. The efficiency of the mounting depends to a large extent on preserving the leathers in good order. The cylinder should therefore be kept filled with the proper charge of liquid, and under the full working pressure laid down in paragraph 491, and the gun slightly raised so that the weight is taken by the ram and not by the buffers.

Leakage of pressure.

532. Leakage of pressure is to be noted, and additional pressure pumped in, if required, at each weekly working. If the leakage exceeds 50 lb. during the week, the cause must be discovered and be remedied.

Cylinders cleaned out.

533. The cylinders will be cleaned out in January and July, and the amount of dirt or rust should be noted.

Spare leathers.

534. All spare leathers should be kept in store and rubbed occasionally with dubbing to prevent their becoming hard and brittle. The supply of spare leathers should never be allowed to run low.

Air chambers.

535. The plugs and covers closing the air chambers of the cylinder and the recoil valves should be removed about once every six months, and the cylinder and valves cleaned thoroughly before they are replaced.

Extra liquid pumped in.

536. If the carriage is to be kept in store for some length of time, it is worth while to pump in a small quantity more liquid, so that it may cover the level cock. There is then less likelihood of escape.

Lower roller path.

537. To keep the training gear in working order, the most important point is to see that the lower roller path is kept perfectly clear of dirt and fragments If it has been well cleaned when first erected, there is very little chance of anything falling on it after it is closed in, if

Digitized by Google

ordinary care is taken whenever the foot plates are removed.

538. The axles of the rollers and the bearings of the shafts of the rest of the gear will require periodical cleaning and lubricating, in the manner laid down in Army Form G. 907. Roller axles and shaft bearings.

539. The training and elevating gears are to be taken to pieces every six months by the Ordnance Artificers. Training and elevating gear.

540. The elevating gear should be tried to see that the equalising friction brake is working properly, which it will not do if oil gets on the drum. The friction cones or plates should be slightly oiled to prevent scoring. The gun trunnion bearings should be well oiled.

541. The parts left bright at issue should be kept greased and not painted. Bright parts.

542. The positions of the oil holes are :— Position of oil holes.

Elevator trunnion	2
Crosshead	2
Cylinder	2
Bearings of elevating shaft, 1st motion	1
„ „ „ 2nd „	2
„ shaft raising valve	2
Bearing shaft, lowering pump, 1st motion....	2
„ „ „ „ 2nd „	2
Brackets training gear (2)	6
Connecting rods (2)	2

Roller axles, two in each.

543. The positions of the leather washers forming joints are :— Position of leather washers forming joints.

Outer gland or cover of cylinder	1
Raising valve	1
Air plug	1
Lowering pumps	5
„ connecting pipes	2 each
Filling cock	1
Bottom plugs	1 each
Recoil valves	1 „

544. The positions of hemp "hydraulic" packing and their sizes are :— Position and size of packing.

Lowering pump	2	size $\frac{3}{8}$-inch square
Raising valve	1	„ $\frac{3}{8}$ „ „
Ram gland, 6-inch	1	„ $\frac{3}{8}$ „ „
„ 9·2 and 10-inch		„ $\frac{7}{8}$ „ „

545. All of these washers and packings are in contact with liquid, except the washers for the air plug. Contact with liquid

546. Metal joints required to hold pressure occur at :— Metal joints holding pressure,

1. The water level cock. 2. The raising valve. 3. The recoil valves. 4. The filling cock. 5. Lowering pump valves.

Digitized by Google

Reports.

547. A report of the result of the weekly workings and inspections, and of the quarterly practices, will be furnished on the 1st February, May, August, and November.

3. Description of the "Pump, Air, Double, Carriage, Garrison, Disappearing, Mark I."

Object of.

548. The pump is intended to charge the recoil cylinders of disappearing garrison mountings with fluid and compressed air.

Composition of.

549. It consists of two gunmetal cylinders of different diameters in one casting, with a base plate, on the top of which an iron frame is bolted to form a tank for the fluid while being pumped into the recoil cylinders. The pump cylinders are fitted with plungers actuated by a rocking lever, which is supported on brackets rivetted to the tank.

The pump is in duplicate, and is bolted to an iron bedding plate, which is secured to the floor by clips and cottars. It is worked by two T handles, which are attached to the rocking levers, and are connected at the top by a link to ensure uniform action.

Mode of charging recoil cylinder.

550. When charging the recoil cylinders with fluid, the fluid is drawn through suction valves from the tank into the large pump cylinders, and on the down stroke of the plunger is forced into the small cylinder through delivery valves. When charging with air the connection between the tank and the cylinders is cut off by closing the valves near the copper delivery pipes, and the air is drawn through a suction valve at the bottom of the large cylinder. This valve is never cut off, but is more heavily weighted than the water valve, and when the water passage is open, liquid is drawn in in preference to air, provided the strokes are not too jerky.

Disconnection of pumps.

551. Either pump can be disconnected if necessary, and worked independently; the delivery of either is cut off by closing the delivery valve. When this is closed, of course the handle must be disconnected, so that the pump cut off may not be worked.

Tanks kept full.

552. The pump should be kept in store with the tanks full of liquid, and so used whether air or liquid is being pumped.

Leathers kept under pressure.

553. To keep the leathers in good order they should be slightly under pressure. To obtain this, screw one length of the copper tubing on the delivery nozzle, and on to the other end of the tube fix the blank cap (with packing leather). Then work the pump with the water valves closed until it becomes difficult to move the handles, when the pump may be left—the air in the tubing serving to maintain the pressure obtained. When standing long in store the pump should be tried occasionally, to see that the pressure is still on.

Digitized by Google

4. Indicator, Pressure Spring, Carriages, Garrison Disappearing, Mark I.

Object of.

554. This indicator shows the air pressure per square inch in the recoil cylinders of H.P. mountings.

Composition of.

555. It consists of a small gunmetal cylinder, surrounded by a steel spiral spring, which is contained in a metal casing. In the centre of the cylinder works a steel ram, which is screwed into the top of the casing, and the bottom of the casing is formed with a rim, which fits round the cylinder, and acts upon the spiral spring. A pointer is fixed to the top of the cylinder, and a graduated scale is attached to the outside of the casing.

Mode of attachment to recoil cylinder.

556. The indicator is attached to the recoil cylinder of the mounting by the intervention of a three-way connection, one opening of which screws into the filling cock, the opposite one takes the pump tube, and the centre the indicator. There is a cut off which closes the way to the indicator, while leaving the passage free between pump and cylinder. The way to the indicator should not be left open while pumping or firing is going on, as the indicator is liable to suffer. When it is desired to leave the indicator on, and detach the pump pipe, the bared nozzle of the connection is closed by a blank cap (with leather washer) supplied.

In connecting the indicator it is not necessary that it should be absolutely vertical, an inclination of 10° or 15° is admissible.

Box.

557. The indicator is issued in a box with two spanners.

Mode of use.

558. When the indicator is connected to the filling cock of the recoil cylinder, the pressure of the compressed air on the fluid acts on the bottom of the ram, and overcoming the resistance of the spring, lifts the casing. The cylinder, with the indicator, remains stationary, and the upward movement of the casing, with the graduated scale, registers the pressure in the recoil cylinder in pounds per square inch. In taking pressures the reading to which the indicator *rises* must be taken, and the casing should not be touched. There is considerable friction in the plunger which is allowed for in the graduating; the indicator will not therefore record a *falling* pressure, and the pressure should be let on gradually, and not with a jerk. When it is desired to take a second reading, the connection with the cylinder must be cut off, and the pressure released from the indicator before re-applying it.

Kept under pressure.

559. When not in use the indicator should, if possible, be kept under a pressure of 50 or 100 lbs. This can be done by means of the dead weight test gauge and the connection mentioned below.

Digitized by Google

Leather of plunger.

560. The small leather of the plunger must not be touched; if it fails to act, the indicator must be returned into store for adjustment.

4A. Indicator Pressure Spring, Carriage Garrison, Disappearing, Mark II.

560A. This indicator is similar in principle to the Mark I. It differs in having a larger piston and a stronger spring, and the motion is multiplied by a chain and drum, which moves a hand on a circular dial. The packing is also special; it consists of finely shreded asbestos fibre mixed with tallow, and is pressed into a recess in the bottom of the piston by means of a rammer supplied for the purpose.

560B. This indicator is much more sensitive than the Mark I. The friction amounts to about 2 per cent. of the pressure, and is constant. The dial is graduated as in the Mark I for rising pressures. It is issued in a wood box with the necessary spanners, spare packing and instructions.

560C. It is designed for use with the same connection as that supplied for Mark I, and its mode of use is the same (see Paragraphs 556 and 558). It is not necessary to keep it under pressure when at rest.

560D. Care should be taken before using to see that the pointer is resting at zero. If this is not the case the readings should be checked by means of the gauge pressure, dead weight, testing, Mark II, and, if necessary, the pointer should be readjusted with reference to the chain and drum.

5. Gauge, Pressure, dead weight testing, Mark I.

Object of.

561. This is issued to test the accuracy of the indicator records.

Mode of use.

562. The indicator is screwed on to the connection at one end, and fluid pressure applied by means of a plunger driven by a hand-wheel at the other end. A safety valve weighted with marked weights releases the liquid when the pressure per square inch marked on the weights is obtained; the indicator should then show this pressure.*

Liquid employed and manipulation of valves.

563. The liquid employed is a mixture of equal parts of glycerine and distilled water, which is poured into the reservoir from time to time as required. There are two cut off valves, one to the indicator and one to the reservoir. As the stroke of the plunger is small, the liquid has to be drawn from time to time from the reservoir without losing the pressure, and this is effected by the judicious manipulation of these valves, the indicator being cut off

* It should be noted that the bed plate, &c., for the weights counts for 200 lbs. (per square inch) in addition to the weights applied.

Digitized by Google

and the reservoir connected when the plunger is being withdrawn, and the reservoir cut off and indicator connected when the plunger is being screwed in. A certain amount of liquid runs to waste from the safety valve when the desired pressure is obtained. The reservoir should be kept covered while in use to prevent dust getting into the liquid. Care should be taken not to shake the instrument while the pressure is on, as it is liable to make the release act prematurely, and so vitiate the results.

564. There are several leather joints and packings which require attention. Spare leathers are issued in a small tin box in the case, together with the necessary spanners. Leather joints and packings.

5A. Guage, Pressure, Dead Weight, Testing, Mark II.

564A. This has the body of the Mark I instrument, but a piston with packing similar to that of the Indicator Mark II. The area of the piston is greater than that of the Mark I, and the motion is multiplied by a lever on which the weights are hung in substitution for weights directly over the head of the piston.

564B. The manipulation is the same as for the Mark I, but there is no escape of liquid.

564C. The liquid to be used is that employed in the cylinders of disappearing mountings. Special instructions are issued with the gauge (as to packing of piston, &c.) or with the fittings when issued for the conversion of Mark I to Mark II.

564D. The levers and their sockets (which hold the pistons) are not interchangeable; they are similarly numbered and must be kept together, but any lever and socket may be fitted to any stand, and the weights and carriers are the same for all gauges.

XVI.—TURNTABLES FOR HEAVY GUNS, AND MACHINERY FOR MOUNTING AND WORKING HEAVY GUNS IN SEA FORTS.*

1. Turntables.

565. In certain positions where it has been found necessary to give to heavy guns, protected by armour, an extended range of lateral fire, a special type of casemate has been provided. Special type of casemate.

566. These casemates have curved armoured fronts, with two gun ports in each, and the gun is mounted, on the service carriage and platform, on a large turntable, Construction of casemate.

* For machinery connected with 17·72-inch and 16-inch R.M.L. guns, directions are embodied in the Hand Book specially issued for those guns.

Digitized by Google

which is so constructed as to admit of the gun being trained through an arc of 60° at one port, and of being transferred to the other port, at which also it can be trained through a similar arc.

Places where turntables exist.

567. Cases of this kind occur at the following places:—

Spithead Defences ...	St. Helen's Fort,	2	Casemates for	18-ton guns.
Gibraltar	Prince Albert's Bastion,	1	,,	38-ton ,,
	King's Bastion,	1	,,	,, ,,
	Wellington Front,	1	,,	,, ,,
	Alexandra Battery,	1	,,	,, ,,
Malta	Sliema Battery,	2	,,	,, ,,

Description of turntable

568. Each turntable consists of the following parts:—

(*a.*) A strong circular platform of girder work, varying from 20 feet to 23 feet in diameter, covered with a removable boarded floor, and carrying on its beams the gun racers.

(*b.*) Under the centre of the turntable is a massive casting, firmly secured to the masonry of the fort, and into this a strong central spindle passes through the platform.

(*c.*) The under surface of the platform rests, at its outer rim, on a set of conical rollers of steel (hard cast-iron at St. Helen's Fort), running in a live ring. The rollers travel on circular paths, made of steel, except at St. Helen's Fort, where they are made of wrought-iron.

(*d.*) The circular path is held to the central casting, already mentioned, by radial bars, and the live ring is confined to its proper circular movement by radial bars attached to a ring set on the central casting.

(*e.*) The turning of the table is effected by means of simple hand gear, working into cogs set on the outer edge of the turntable platform, a little below the level of the floor.

(*f.*) The whole of the turntable and the turning gear are contained in iron casings.

(*g.*) Tumbler stops, set in the floor, and worked by hand, engage with corresponding notches in the table when it is in the proper position to allow the guns to be worked.

(*h.*) One of these stops, also, when put in action, throws out the turning gear, and thus prevents any shock from firing being transmitted to the men at the handles.

(*i.*) A leather flap, attached to the outer edge of the turntable, and protected by steel strips, travels with it round the floor, and is intended to prevent any dirt from reaching the roller path.

(*j.*) The bushes of the central spindle can be lubricated by oil holes in the floor, and those of the rollers by oil holes in the inner faces of the latter.

Digitized by Google

(*k.*) All the bearings of the turning gear can be got at by removing the cover of the cast-iron casing in which it lies.

Points to be attended to in working.

569. The principal points to be attended to in working are :—

(*a.*) To keep the bearings of the machinery and the bushes of the turntable greased with lubricating oil, and the teeth of the wheels with Field's grease.*

(*b.*) To keep all moving parts free from dirt and grit, and especially to keep dirt from falling down between the fixed and moving parts, and lodging on the rollers or roller path.

(*c.*) Never to fire the gun unless the turntable is locked by the stops. Neglect of this precaution would cause serious injury to the men at the turning handles.

(*d.*) For ordinary examination, the tables should be revolved one-quarter turn every alternate day, or three times a week ; lifting the floor, and lubricating the bearings as required.

(*e.*) Should it appear that more than usual force (three men at St. Helen's, and four men at Malta and Gibraltar) is required to move them, the table should be raised by means of the lifting gear supplied to each station, and the parts cleaned and lubricated as laid down for periodical examination.

(*f.*) Periodical examinations for purposes of extra cleaning, and of repair, when necessary, should be made every six months.

(*g.*) The turntable should be raised at least once a year by the lifting gear to a sufficient height from the live ring (without dismounting the gun) to admit of the bushes of the central spindle being thoroughly examined and cleaned, of the spindles of the rollers of the live ring being taken out and cleaned and adjusted, and of all rust or dirt being removed from the upper and lower roller paths and live ring.

(*h.*) The lifting gear consists of four long vertical screw bolts, supported at the upper ends by nuts resting on washer plates on the roof of the casemate through which they pass, whilst their lower ends are secured to wrought-iron cross bars, inserted under the girders of the platform at Gibraltar and St. Helen's, and to washer plates attached by short bolts and other washer plates to the girders of the turntable at Sliema Battery.

* Price's composite grease will be used at all stations abroad other than British North America.

Digitized by Google

(*i.*) The nuts on the roof are provided with large spanners. Those at Gibraltar and Malta have four arms each, and those at St. Helen's two arms each, and each arm is capable of taking two men.

(*j.*) By working these nuts round the bolts, the table can be raised, but hydraulic jacks standing on the floor under the table, and bearing against the cross bars or washer plates, should be employed to assist the screws in lifting.

(*k.*) The lowering should be done by the screws alone.

(*l.*) Care must be taken that all the lifting bolts are equally tight to commence with, and that the nuts are turned simultaneously, and through precisely the same number of revolutions both in lifting and lowering, and that they are not lifted from their seats by too quick a motion of the hydraulic jacks.

(*m.*) It will be found to be a safe and convenient plan to order a given number of turns of the roof spanners, say six for a spell, all the four parties turning being halted at the end of each spell, and waiting for a fresh order.

(*n.*) Before commencing to lift, it will be necessary to make sure that the pinion of the turning machinery, which works into the cogs on the edge of the turntable, will pass clear through the segmental cut formed for the purpose, in the lower flange of the turntable, and that all other parts are clear. Care must be taken that the threads of the main screw bolts do not bear against the washers or sides of the holes through which the bolts pass.

(*o.*) The gun should be run back 4 feet at St. Helen's, 4 feet 6 inches at Gibraltar, and 2 feet 3 inches at Malta, so that the load may be divided uniformly among the bolts.

(*p.*) The screw threads should be liberally supplied with Rangoon oil, and, when not in use, the gear should be kept under cover, and clean.

In charge of O.C R.A.

570. The turntables will be in charge of the Officer Commanding Royal Artillery, who will have possession of detailed drawings of the same, and will be responsible that the points detailed above are properly carried out.

2. 50-ton hoisting gear for landing heavy guns at sea forts.

Description of 50-ton hoisting gear.

571. This gear consists of a pair of cantilever girders, a traveller and a hoisting crab. The girders, which are 42 feet 4 inches long, are placed parallel about 4 feet 5 inches apart, and project 25 feet beyond the face of the work. The outer ends are connected by a cross beam, and the

Digitized by Google

inner ends are secured by long holding down bolts to girders embedded in the masonry. Rails are fitted on the top of the girders for a traveller which carries two pairs of pulleys for the hoisting chains, and is moved along the rails by means of an endless racking chain. The hoisting chains are two in number, and consist of a series of steel plates connected by steel pins. The front ends are secured to the cross beam by a compensating lever which equalises the strain on both. They pass over the pulleys of the traveller and then round sprocket wheels in the crab, and the loose ends drop down hawse pipes into a well in the masonry. The chains hang in bights between the pulleys of the traveller and support a pair of pulleys attached to a crane hook by which the gun is slung. By this arrangement the gun may be run in and out without altering its level.

The hoisting crab is fixed on the roof at the rear of the cantilevers. It consists of a combination of gearing and sprocket wheels, which is worked from a capstan turned by manual labour.

The capstan is manned by 40 men ; the diameter over the arms (of which there are 10) being 26 feet. The capstan head can be thrown in gear by suitable clutches either with the sprocket wheels over which the hoisting chains pass, or with another wheel which drives the racking chain.

Provision against accident to the gear is made by the use of controlling gear, which consists of a worm wheel keyed on the main shaft and geared into an endless screw which is turned by a hand wheel. To allow the hoisting machinery to move, this screw must be turned by an attendant. A similar arrangement is provided for the racking gear, and serves to hold the racking chain, when not in gear with the capstan, thus preventing any motion of the traveller.

3. 45-ton hoisting gear for landing heavy guns at sea forts.

572. The general arrangement of this gear is similar to that of the 50-ton already described. Description of 45-ton hoisting gear.

The cantilever girders are 48 feet 11 inches long, and project about 23 feet from the face of the work.

4. Hoisting gear for carriages, &c., up to 20 tons.

573. The cantilever girders of this gear are the same as those used for the 45-ton hoisting gear, but the hoisting crab is worked by winch handles instead of from a capstan. Description of 20-ton hoisting gear.

A four-wheeled traveller runs along the rails, and is racked backwards and forwards by a short link chain

Digitized by Google

which passes round a sprocket wheel on the crab, and is put in and out of gear by means of a clutch.

The traveller is fitted to take two service hoisting tackles of 6-inch rope and 18-inch blocks the falls of which are led to bollards on the crab.

5. Controlling gear at Portland Breakwater fort.

Description of controlling gear.

574. This gear, which is similar to the controlling arrangement in the heavy hoisting gear, consists of a steel drum with worm wheel attached, mounted in a cast-iron frame, which is bolted to the masonry at the entrance of the fort. The drum is provided with a flexible steel-wire hawser 6½ inches in circumference.

6. Instructions for the care and preservation of the hoisting gears.

Care and preservation of gear.

575. The wheels, chains, and all working parts of the above gears must be coated with Field's grease to prevent rust.

When mounted the gear must be worked at least once a month, so that the bearings can be thoroughly lubricated (with Rangoon oil) and the hoisting chains well oiled through holes in the plates made for the purpose.

Particular attention must be paid to this last operation, otherwise the pins may rust in the plates, and render the chains unfit for work.

The capstan bars of the heavy gears and the tackle and winch handles of the 20-ton gear, must be placed in store when not required for use.

Examinations of the gear should be made every six months, for purposes of cleaning, painting, and repair (if necessary) so that the whole may be preserved in good condition.

The gears will be in charge of the Officer Commanding Royal Artillery, who will have possession of detailed drawings of the same, and will be responsible that the foregoing instructions are properly carried out.

7. Arrangement for lifting 43-ton guns from the lower to the upper tiers of the Spithead forts.

Description of 43-ton gun lifting arrangement.

576. This apparatus consists of a main lifting screw 13 feet 6 inches long, a pair of upper links 8 feet 9 inches long, two pairs of lower links 5 feet 8 inches long, two trunnion shackles, four connecting pins, and two spherical nuts. All these articles are of steel.

The shackles are placed on the trunnions and attached to the lower links, which are brought together over the gun, and connected by the upper links to the main screws.

The screw passes through the roof of the work, and is

Digitized by Google

suspended by the spherical nuts from two steel cross heads, the lower of which bears on a strong timber framing fixed on the top of the fort, and the upper upon two 30-ton hydraulic jacks.

A pair of iron girders, 28 feet 6 inches long, are supported on a level with the upper tier, by four iron pillars. Steel rails are fitted on the top of the girders, on which a trolley runs for carrying the gun.

The trolley consists of a steel casting, 5 feet 10 inches long, 8 feet 10 inches wide, and 12 inches deep, fitted with four steel rollers, 1 foot 8 inches diameter and 8·75 inches wide. The trucks run on 4-inch steel axles, and are grooved to suit the rails.

When the gun is lifted the requisite height, the trolley is run under it, and both can then be moved by ordinary tackle.

This apparatus is sufficiently strong to lift a weight of 50 tons.

8. Instructions for the care and preservation of the Lifting Arrangement.

577. This apparatus, when not in use, must be placed in Store, and all bright parts well coated with Field's grease. Care and preservation of gear.

The hydraulic jacks must be pumped up in the "Frame, store, hydraulic jack" to keep them in working order.

When the apparatus is required for use, all superfluous grease must be removed, but the nuts and screw must be well lubricated with Rangoon oil, and the hydraulic jacks tested before lifting the gun.

The lifting arrangement will be in charge of the Officer Commanding Royal Artillery, who will have possession of detailed drawings of the same, and who will be responsible that the foregoing instructions are properly carried out.

XVII.—ROPE MANTLETS.

578. As mantlets are liable to take fire by the flash of discharge of the gun, or by sparks being drawn in during recoil, it becomes necessary (not only to prevent injury to the mantlet itself, but also to guard against the more serious danger of ammunition being ignited by a smouldering fire) to apply to them a saturated solution of chloride of calcium for the purpose of rendering them fireproof. Necessity for soaking in chloride of calcium.

579. Mantlets which can be readily removed from their supports may be soaked in a shallow trough, but those which are fixtures must be brushed over. In either case the mantlet should be perfectly dry before the treatment. Care should be taken to lead off the salt drip that may come away from the wetted mantlet. Mode of application of chloride of calcium.

580. The time during which one wetting will remain effective will of course depend mainly on the state of the Frequency of application.

Digitized by Google

weather and the amount of exposure to which the mantlet is subjected. The condition of the rope-work may be readily ascertained by applying a light to its loose fibres, or by applying the tongue and noticing whether the salt can be tasted.

Chloride of calcium only to be applied in certain cases during peace.

581. As the chloride of calcium makes the rope-work somewhat unpleasant for handling, is destructive to clothing, and also promotes rust in ironwork, it should be applied in peace time only to the mantlets of those guns which are liable to fire more than one round during a practice, and even in their case only to the parts which are immediately exposed to the flash of discharge. In war time, however, all rope mantlet-work must be kept thoroughly damp with the solution.

Cases not to be opened till necessary.

582. The cases containing the chloride of calcium should not be opened until necessary, and when opened, but not emptied, should be again closed as completely as possible from the air and kept in a dry place.

Mantlet bars to be kept clean, &c.

583. The mantlet bars will be kept perfectly clean and smooth and free from rust, and before using any mantlet, even for ordinary exercise, grease will be freely laid on the bars wherever the moving thimbles pass (Field's grease* is allowed for this purpose, under paragraph 201, Part 2).

Mantlets to be worked.

584. The mantlets will be worked backwards and forwards at least once a week, to see that they move freely.

Mantlets to be kept dry.

584A. On no account should rope mantlets be placed in a store, or otherwise stacked, in a wet condition. Care should be taken when conveying mantlets to or from a work by boat or other means, that they are kept dry, and no more should be moved at a time than could be dried on arrival at their destination, should any get wet through accident. Calm dry days should be selected for moving mantlets.

XVIII.—HYDRAULIC LIFTING JACK, TANGYE'S PATTERN.

1. Care of the Jack.

Fluid for filling jacks.

585. Hydraulic jacks will be filled† with a fluid composed as follows :—

Methylated spirits	7 gallons.
Distilled water	3¼ „
Mineral oil....	¼ „
Carbonate of Soda	250 grains.

Filter to be used.

586. In filling the jack, the fluid will be poured through the filter supplied for the purpose.

Always to be filled.

587. The jack, when once filled, will be kept constantly

* Price's composite grease will be used at all stations abroad other than British North America.

† The capacities of the several jacks are: Rear roller, 7½ ton, 4 pints Tangye's, 22½ ton, 3½ pints; 15 ton, 3½ pints; 7½ ton, 2 pints.

Digitized by Google

so, whether in use or in store: it will, however, be emptied and washed out once every three months, and filled as above directed.

588. A moderate pressure must be constantly maintained on the leather packings of hydraulic jacks, to preserve them in good condition and prevent leakage. With this object jacks in store must be pumped up in the "Frame, store, hydraulic jack," sufficiently to maintain a moderate pressure on the packings, special blocks being supplied for the rear roller jacks of 35 and 38-ton carriages. These jacks must be lashed to the frame to prevent their falling in the event of the pressure going off. Pressure kept up.

589. When a rear roller jack is in use as part of the carriage, the latter must be run back until it is in contact with the rear stops, and secured in that position by skidding placed between the front of the platform and the front transom of the carriage. The jack must then be pumped up sufficiently to throw the carriage on its rollers, and pumped up from time to time to keep the carriage in that position. Care of rear roller jacks

2. Preparation for Transport.

590. The lowering screw-plug is loosened to allow of the lowering of the cylinder over the ram, by which means the fluid is collected in the reservoir; the air screw-plug is then tightly screwed by means of a screw-driver on the end of the tommy, and the jack is ready for transport. Preparation for transport.

3. Instructions to be Observed in Raising or Lowering a Load.

591. The air screw-plug is loosened to allow of the entrance of air, and the lowering screw-plug is tightened; the lever is shipped and worked up and down, its action on the pump being as follows:—The lever acts upon the crank, through the spindle, and by its means raises and lowers the plunger; in the up-stroke a vacuum is created in the pump, and the pressure of the air on the fluid in the reservoir forces it through the inlet valve; at the down stroke the inlet valve closes and the outlet one opens, and allows of the fluid being forced past it on the top of the ram, thus raising the cylinder, and with it the load on the cap. Action of jack.

592. To lower, the screw-plug is loosened, which allows the fluid in the cylinder to pass through the passage to the reservoir. To lower.

593. Jacks of the latest pattern have the lowering valve placed at the bottom of the pump. To "lower," the lever must be drawn partially off the spindle, when it can be To "lower" in the latest patterns.

Digitized by Google

forced down as far as possible past the stop on the side of the jack, to allow the fluid under the ram to pass back to the cistern.

4. Mode of Taking Out the Pump.

Taking out the pump.

594. Unscrew the cap, empty the fluid out of the reservoir, loosen the crank set-screw, take out the packing gland and leather, the spindle, crank, and plunger. With the spanner (which fits the top of pump) unscrew the pump and remove it. Use the forked end of the spanner to unscrew the pump screw-plug, for getting at the outlet valve, when the spring and valve can be taken out.

5. Parts Liable to Get out of Order.

Parts liable to get out of order.

595. The parts most likely to get out of order are the leather packings; those of the air screw-plug, crank spindle, lowering screw-plug, and ram would cause the jack to leak externally; any disorder in them can easily be detected, and the packing replaced with new; those of the plunger and outlet valve would injure the lifting power, and would necessitate the taking to pieces of the jack and its careful examination.

Leather packing.

596. To get at the leather packing of the ram release the feather, which will allow of the removal of the ram.

Ram.

597. By standing unused a long time the ram is liable, from rusting, to set fast in the cylinder; to prevent this and other defects the jack should be examined and worked at regular intervals.

Gauze wire.

598. The gauze wire covering placed over the inlet valve is to prevent the ingress of dirt; this valve, having a metallic seating, is little liable to derangement.

XIX.—HYDRAULIC LIFTING JACK, G.S. PATTERN.

1. Care of the Jack.

Fluid for filling jacks.

599. Hydraulic jacks will be filled* with a fluid composed as follows:—

Methylated spirits....	7 gallons
Distilled water	3¼ ,,
Mineral oil	¼ ,,
Carbonate of soda	250 grains.

To fill the jack.

600. Having the ram quite down, the fluid will be poured in through the hole for the air screw-plug, until the reservoir is full, and the air screw-plug replaced.

Filter to be used.

601. In filling the jack the fluid will be poured through the filter supplied for the purpose.

Always kept filled.

602. The jack, when once filled, will be kept so whether

* The capacities of the G.S. jacks are: 30 tons, 6 pints; 20 tons, 4½ pints; 10 tons, 2½ pints,

Digitized by Google

in use or in store; it will, however, be emptied and washed out once every three months, and filled as above directed.

603. If not in actual use the jack will be "pumped up" in the "Frame, store, hydraulic jack," to keep the packings in good order. To be "pumped up" in store.

2. Preparation for Transport.

604. Should the jack not be in the lowest position the lever is put in the socket with the shoulder upwards, and pressed down to its fullest extent, by which means the fluid is collected in the reservoir; the air screw-plug is then tightly screwed down by a screwdriver on the end of the lever. Preparation for transport.

3. Instructions to be Observed in Raising or Lowering a Load.

605. The air screw-plug is loosened to allow of the entrance of air, the lever is shipped with the shoulder downwards, and worked up and down, its action on the pump being as follows:—The lever acts upon the crank through the spindle, and by its means raises and lowers the plunger; in the up-stroke a vacuum is created in the pump, and the pressure of the air on the fluid in the reservoir forces it through the inlet valve; at the down-stroke the inlet valve closes, and the outlet one opens and allows of the fluid being forced past it on to the bottom of the ram, thus raising the cylinder, and with it the load. To "raise" the load.

606. To "lower," the lever is shipped in the socket with the shoulder upwards, and then pressed downwards to its full extent, this allows the fluid in the cylinder to pass through the passages to the reservoir. To "lower" the load.

4. Parts Liable to Get out of Order.

607. The parts most likely to get out of order are the leather packings. Any disarrangement of those of the air screw-plug, crank spindle, ram, and cup leather at the base of the main cylinder, would cause the jack to leak internally: any disorder in them can easily be detected, and the packing replaced with new. Defects in the packing of the plunger would injure the lifting power, and would necessitate the taking to pieces of the jack, and its careful examination. Parts liable to get out of order.

608. To get at the leather packing of the ram, or at the outlet valve, unscrew the base of the jack, remove the cup leather in the base of the cylinder and unscrew the packing ring from the end of the pump, when the leather To remove leather packings.

Digitized by Google

can be removed. To get at the leather packing of the plunger or at the inlet valve, empty the reservoir and unscrew it, the inlet valve can then be removed by unscrewing the cap on the end of the plunger.

5. Precautions to be Observed in Working the Jacks.

Precautions to be observed in working the jack.

609. These jacks may be used standing, or at an angle, only the head should be a little higher than the base. They should not be lowered fast or suddenly checked with a heavy load.

To miss a stroke.

610. Sometimes it happens that a full stroke of the lever would raise the load too high, then raise the lever a little and push it down slowly, by which means a stroke will be missed.

To clear the inlet valve.

611. In the case of the inlet valve sticking on its seat, strike the lever a few sharp blows up and down with a piece of wood. and this will jar the valve and remove the difficulty.

XX.—PROJECTILES.

1. Scraping and Examining Projectiles.

Shot runs and trestles.

612. Shot runs and trestles are to be supplied to all working parties employed in cleaning shell or shot. If shot runs are not obtainable, suitable materials, such as strong wooden planks, &c., will be supplied in order that the work may be properly carried on.

Examining interior.

613. The shell or shot will be placed on the run and the plugs or corks removed from the shells, and the interior examined by the eye in the first place to ascertain if they contain any powder, and also searched with a copper scraper, or in the case of Shrapnel shells, with a copper wire; shells containing powder will be at once carefully removed and dealt with under the Instructions for the examinations of filled shells.

Rifled Shrapnel.

614. Rifled Shrapnel shells, before painting, will be examined to see if the fuze socket is secure; in the earlier patterns of shells it has sometimes become loose, allowing the resin to work through into the socket; also at the junction of the head and body, to see that the head is secure. Any shell found defective will be put on one side for the decision of the Commanding Officer.

Lead-coated projectiles.

615. Lead-coated projectiles will be carefully examined as to the attachment of the lead coating; in very bad cases the eye will detect a loose coat, and in doubtful cases tapping with a hammer will detect a loose place, as a peculiar dull sound is given out. If blisters appear on the surface they should be pricked, and the lead hammered

Digitized by Google

down. The high ring gauge should be passed over the projectiles, and the lead, if set up, can be filed down. Any doubtful cases will be set aside for the decision of the Commanding Officer.

Moorsom fuze-hole.

616. Any shell having the obsolete Moorsom gauge fuze-hole (which can be readily known by the large plug with a shoulder and cylindrical body) will be put on one side for conversion to G.S. gauge.

Scraping the exterior.

617. The shell or shot will be scraped with the swords provided for the purpose until quite free from paint or rust, care being taken not to injure the studs of the R.M.L. projectiles, or the lead coating of the R.B.L. projectiles.

Interior.

618. The interiors of smooth-bore common and mortar shells will be scraped with a copper scraper and freed from rust; the interior of rifled shells being lacquered, they will not be scraped, but simply inverted to ensure their being free from water, and to shake out any loose dirt, &c.

Leather collars.

619. The leather collars on the fuze-hole plugs will be examined, and if necessary replaced by new ones.

Rivet holes.

620. The rivet holes for the bottoms of spherical shells will be examined, and if necessary cleaned out and re-waxed.

Fuze-holes.

621. The fuze-holes of all rifled shells, and the loading-holes of diaphragm Shrapnel shells, will be thoroughly cleaned; the fuze-hole plugs and loading-hole plugs for diaphragm Shrapnel shells will be smeared with the lubricant detailed for that purpose in the Table at page 530, and then screwed home into the shells.

Fractured Palliser projectiles.

622. Model "B," designed to illustrate the extent of the fracture of Palliser projectiles, will be issued by the Ordnance Store Department, for the guidance of Inspectors of Warlike Stores in the examination of Palliser projectiles. Any Palliser projectiles that may be found with their points broken to a greater extent than what is shown in model "B" will only be used for practice, and will be retained at stations for that purpose, if so required. If not required they will be sent to the Royal Arsenal, Woolwich. Projectiles with their points broken similarly to, or to a less extent than is shown in model "B," will be considered serviceable.

2. Painting and Piling Projectiles.*

Magnetic oxide paint.

623. Magnetic oxide paint is issued for painting all projectiles except the tips of rifled Shrapnel shell.

* See also Magazine Regulations.

Digitized by Google

Two coats of paint to be given.

624. The shell or shot will be painted with two coats of paint, the second coat will not be given until the first coat has thoroughly set. Tarpaulins will be supplied for placing over the projectiles after they have received the first coat.

Portions to be painted.

625. The paint will be applied over the whole of the exterior iron surface, including the portion inside the fuze-hole as far as the metal bouche; the upper surface and key-hole of the metal plug, and the projecting socket in those shells which have it, will also be painted. In the case of lead-coated projectiles the painting should extend at least half an inch over the junction of the iron and lead both at the base and shoulder. Projectiles fitted with gas-checks will have their gas-checks removed before being painted.

Gauging.

626. Previous, and subsequent, to painting, the whole of the projectiles will be gauged with the proper gauges by the non-commissioned officer in charge of the party, and all that do not gauge properly will be put to one side, and the circumstances reported to the Commanding Officer.

Time and working pay, and quantity of paint.

627. The time and working pay allowed for scraping, cleaning, and painting, together with the quantity of paint required, is given in Table L, pages 648 to 651. The quantity of paint for marking is given in Part 1, page 156.

White paint for bands on steel shells.

628. White paint for the white bands on steel shells consists of the following ingredients:—

Lead, white, ground	56 lbs.
Driers, patent, ground....	5 „
Oil, linseed, raw	4 qts.
Turpentine	4 „

Red paint for Shrapnel shell.

629. Red paint for the tips of Shrapnel shell consists of the following ingredients:—

Lead, red, dry	112 lbs.
Lead, white, ground	14 „
Litharge....	14 „
Oil, linseed, boiled	14 pints.
Turpentine	4 „

Filled shells to be re-painted where necessary.

630. Shells should not require repainting after being placed in the shell store, but if, from any cause, they are found in such a state that repainting appears necessary, a report will be made to the General Officer Commanding at the station, who will give the necessary authority for the shells to be repainted under the Officer of the Staff for the Inspection of Warlike Stores, or other qualified officer.

Shells to be examined beforefilling.

631. All shells to be filled will be examined, and, if not in a proper condition as regards painting, will be painted before being filled and placed in store.

Digitized by Google

Paint for marking.

632. If the date, or the red bands denoting filled, &c., should become illegible or peel off, they may be renewed without emptying the shell. The proper paint for this purpose consists of the following ingredients :—

Lead, red	46 lbs.
Litharge....	10 ozs.
Venetian red	23 lbs.
Oil, linseed, boiled	6 pints.
Turpentine	1½ ,,

Mode of piling projectiles.

633. The bases of all piles should be firm and level, and formed of stone, concrete, or other hard material. Projectiles should never be piled on wood, sand, mud, or loose shingle, even when garlands are used. Unserviceable shell or shot form an excellent base, and iron rails with turned up ends are sometimes used for piling elongated projectiles. When neither of these means are available, medium wood scotches will be allowed for scotching up the ends of piles of elongated projectiles. Spherical shells will be piled with their fuze-holes downwards. Projectiles for rifled ordnance should be piled on their sides, special care being taken not to injure the lead-coating, studs, gas-checks, or driving bands. Rifled Shrapnel shells will on no account be placed on their bases when stored in the open air, as it is impossible to dry these shells thoroughly when water has once entered them.

Care must be taken not to burr the studs of projectiles when stacking. Studded projectiles should never be rolled on the ground or on stone floors; the planks supplied for this purpose will invariably be used.

XXI.—WINCHES AND CHAINS FITTED IN SHELL LIFTS.

1. Testing.

Shell-lifting apparatus to be tested annually.

634. It being desirable that all winches and chains fitted in shell lifts in forts and batteries should be periodically subjected to a working trial, Officers Commanding Royal Artillery Districts will arrange that every shell-lifting apparatus in their districts be tested annually with a weight equal to 1½ times the greatest weight the apparatus will have to lift under service conditions.

Member of R.E. to be present.

635. The trials should be conducted in the presence of a member of the Royal Engineer Department, who will inspect the apparatus before and after trial, and note any signs of weakness which may have been disclosed.

2. Preservation.

Parts not painted to be oiled.

636. All those parts of the apparatus which are not painted should be oiled at least once every year to preserve them from rust.

Digitized by Google

XXII.—TABLES OF TOOLS, TIME, WORKING PAY, AND

TABLE A.—List of Tools required for the Cleaning, Examination,

Tools.	Nature. B.L. 13·5-inch.	12-inch.	10-inch.	9·2-inch.	8-inch.	6-inch.	5-inch.	4-inch.	20-pr.	12-pr.	R.B.L. 7-inch.	40-pr.	40-pr. side closing.	20-pr.	12- and 9-pr.	6-pr.	R.M.L. 17·72-inch.	16-inch.	12·5-inch.
Vocabulary Section II. (1).																			
Stoves, Soyer's	*a*	*a*	*a*	*a*	*a*	...	...	...	...	...	...	...	...	...	...	...	*a*	*a*	*a*
Vocabulary Section III.																			
Bits, vent, Armstrong...	‖	...	...	...	...	...	...	...	...	...	*a*	*a*	...	*a*	*a*	*a*	...	...	...
Braces, smiths	...	...	...	...	...	...	...	...	...	...	...	...	*a*	...	...	...	*a*	*a*	*a*
„ „ Rimers, vent { long	...	...	...	...	...	...	...	...	...	...	...	...	...	...	...	...	*a*	*a*	*a*
„ „ Rimers, vent { short	...	...	...	...	...	...	...	...	...	...	...	...	*a*	...	...	...	...	...	...
Brushes, paint { ground, 000 ...	...																		
Brushes, paint { unground, 000 ...	...																		
Brushes, paint { sash tool, No. 8 ...	...																		
Clamps, special	...	...	...	...	...	...	...	...	...	...	...	...	...	...	...	...	1	1	...
Compasses, wing, 10-inch	*a*	*a*	*a*	*a*	*a*	*a*	*a*	...	*a*	*a*	*a*	*a*	*a*	*a*	*a*	*a*	*a*	*a*	*a*
Gauges, vent { 24-inch ... ... sets	*a*	*a*	*a*	*a*	...	*a*	...	...	...	...	...	...	...	...	...	...	*a*	*a*	*a*
Gauges, vent { 15-inch ... ... „	...	...	...	...	...	...	*a*	...	...	...	...	...	...	...	...	...	...	...	...
Gauges, vent { 4-inch ... ... „	...	...	...	...	...	...	...	...	*a*	*a*	...	...	...	...	...	...	...	...	...
Holders, brush { No. 1	...	...	...	...	...	...	...	...	...	...	...	...	...	...	...	...	...	...	...
Holders, brush { No. 2	...	...	*a*	*a*	*a*	*a*	*a*	...	...	...	*a*	*a*	*a*	...	...	...	...	...	...
Holders, brush { No. 3	*a*	*a*	...	...	...	...	...	...	...	...	...	...	...	...	...	...	...	...	*a*
Holders, brush { No. 4	...	...	...	...	...	...	...	...	*a*	*a*	...	...	...	*a*	*a*	*a*	...	...	...
Instruments, taking impressions, bore { No. 1	...	...	...	...	...	...	*a*	...	...	...	*a*	...	...	...	...	...	...	...	*a*
Instruments, taking impressions, bore { No. 2	...	...	...	...	...	...	...	...	*a*	...	...	...	...	*a*	*a*	...	...	...	...
Instruments, taking impressions, bore { No. 3	...	...	...	...	...	...	*a*	*a*	...	...	...	*a*	*a*	...	...	...	...	...	...
Instruments, taking impressions, bore { No. 4	...	*a*	*a*	*a*	*a*	...	...	...	...	...	...	...	...	...	...	...	...	...	...
Instruments, taking impressions, bore { No. 5	...	...	...	...	...	...	...	...	...	...	...	...	...	...	...	...	...	...	...
Instruments, taking impressions, bore { No. 6	...	...	...	...	...	...	...	...	...	...	...	...	...	...	...	...	...	...	...
Instruments, taking impressions, bore { No. 7	1	...	...	...	...	...	...	...	...	...	...	...	...	...	...	...	...	...	...
Instruments, taking impressions, bore { No. 8	...	...	...	...	...	...	...	...	...	...	...	...	...	...	...	...	...	...	...
Instruments, taking impressions, bore { No. 9	...	...	...	...	...	...	...	...	...	...	...	...	...	...	...	...	*a*	*a*	...
Instruments, taking impressions, bore Blocks, adjusting { No. 4 { bore ...	...	...	*a*	*a*	...	...	...	...	...	...	...	...	...	...	...	...	...	...	...
Instruments, taking impressions, bore Blocks, adjusting { No. 4 { chamber ...	...	1	1	*a*	*a*	...	...	...	...	...	...	...	...	...	...	...	...	...	...
Instruments, taking impressions, bore Blocks, adjusting { No. 7 { bore ...	1	...	...	...	...	...	...	...	...	...	...	...	...	...	...	...	...	...	...
Instruments, taking impressions, bore Blocks, adjusting { No. 7 { chamber ...	1	...	...	...	...	...	...	...	...	...	...	...	...	...	...	...	...	...	...
Instruments, taking impressions, bore Blocks, adjusting { No. 9 { bore ...	...	...	...	...	...	...	...	...	...	...	...	...	...	...	...	...	1	1	...
Instruments, taking impressions, bore Blocks, adjusting { No. 9 { chamber ...	...	...	...	...	...	...	...	...	...	...	...	...	...	...	...	...	1	1	...
Instruments, taking impressions, bore Discs { blocks, adjusting ...	‖1	...	...	...	...	...	...	...	...	...	...	...	...	...	...	...	...	...	...
Instruments, taking impressions, bore Discs { guide { bore { No. 1 ...	...	...	...	...	...	1	...	...	...	...	1	...	...	...	...	...	...	...	2
Instruments, taking impressions, bore Discs { guide { bore { No. 4 ...	...	2	2	2	2	...	...	...	...	...	...	...	...	...	...	...	...	...	...
Instruments, taking impressions, bore Discs { guide { bore { No. 7 ...	3	...	...	...	...	...	...	...	...	...	...	...	...	...	...	...	...	...	...
Instruments, taking impressions, bore Discs { guide { bore { No. 9 ...	...	...	...	...	...	...	...	...	...	...	...	...	...	...	...	...	2	2	...
Instruments, taking impressions, bore Discs { chamber { No. 4 ...	...	1	1	1	1	...	...	...	...	...	...	...	...	...	...	...	...	...	...
Instruments, taking impressions, bore Discs { chamber { No. 7 ...	‡1	...	...	...	...	...	...	...	...	...	...	...	...	...	...	...	...	...	...
Instruments, taking impressions, bore Discs { chamber { No. 9 ...	...	...	...	...	...	...	...	...	...	...	...	...	...	...	...	...	2	2	...
Instruments, taking impressions, bore Discs { supporting, No. 7 ...	‖1	...	...	...	...	...	...	...	...	...	...	...	...	...	...	...	...	...	...

a. Common. ‡ Stamped B. ‖ Stamped A.

Digitized by Google

MATERIALS FOR SCRAPING AND PAINTING ORDNANCE, &c.

Painting and Lacquering of the various natures of Rifled Ordnance.

Nature.																										Remarks.
R.M.L.																			R.M.L. jointed.			Quick-firing.				
12-inch.	11-inch.	10·4-inch.	10-inch.	9-inch.	8-in. and howitzer.	7-inch.	6·6-inch and howitzer.	80-pr., and 64-pr. 71 and 58 cwt.	6·3-in. howitzer and 64-pr. 61 cwt.	40-pr.	25-pr.	16-pr.	13-pr.	9-pr.	7-pr.	4-in. howitzer.	15-pr.	2·5-inch.	4·7-inch.	6-pr.	3-pr.	
a	*a*	*a*	*a*	*a*	*a*	...	...	...	...	...	...	...	...	...	...	...	...	...	...	...	...	*Gun only.
...	...	...	...	...	...	...	...	...	...	...	...	...	...	...	...	...	...	...	...	...	...	
a	*a*	*a*	*a*	*a*	*a*	*a*	*a*	*a*	*a*	*a*	*a*	*a*	*a*	*a*	*a*	...	...	...	...	...	...	
a	*a*	*a*	*a*	*a*	...	...	...	...	...	...	...	...	...	...	...	...	...	...	...	...	...	
...	...	...	...	...	*a*	*a*	*a*	*a*	*a*	*a*	*a*	*a*	*a*	*a*	*a*	...	...	...	...	...	...	Issued as required for painting or lacquering.
...	...	...	...	...	...	...	...	...	...	...	...	...	...	...	...	...	...	...	...	...	...	
a	*a*	*a*	*a*	*a*	*a*	*a*	*a*	*a*	*a*	*a*	*a*	*a*	*a*	*a*	*a*	...	...	...	...	...	...	
a	*a*	*a*	*a*	*a*	*a*	*a*	...	...	...	...	...	...	...	...	...	...	...	...	...	...	...	
...	...	...	...	...	...	...	*a*	*a*	*a*	*a*	*a*	*a*	*a*	*a*	*a*	...	...	...	...	...	...	
...	...	...	...	...	...	...	...	...	...	...	...	...	...	...	...	...	...	...	...	...	...	
...	...	...	*a*	*a*	*a*	*a*	*a*	*a*	*a*	*a*	*a*	*a*	*a*	*a*	*a*	...	.	...	...	...	...	For end of bore.
...	...	...	*a*	*a*	*a*	*a*	*a*	*a*	*a*	*a*	...	...	...	...	...	...	...	...	...	...	...	
a	*a*	*a*	...	...	...	...	...	...	...	...	...	...	...	...	...	...	...	...	...	...	...	
...	...	...	...	...	...	...	...	...	...	...	*a*	*a*	*a*	*a*	*a*	...	...	...	...	...	...	
a	*a*	...	*a*	*a*	*a*	*a*	*a*	*a*	*a*	...	...	...	...	...	...	...	...	...	...	...	...	
...	...	...	...	...	...	...	...	...	...	...	*a*	*a*	*a*	*a*	*a*	...	1	...	1	...	...	
...	...	*a*	...	...	...	...	...	...	...	*a*	*a*	...	...	...	...	1	...	1	...	...	...	
...	...	...	...	...	...	...	...	...	...	...	...	...	...	...	...	...	...	...	...	1	...	
...	...	...	...	...	...	...	...	...	...	...	...	...	...	...	...	...	...	...	...	...	1	
...	...	...	...	...	...	...	...	...	...	...	...	...	...	...	...	...	...	1	...	...	...	
...	...	...	...	...	...	...	...	...	...	...	...	...	...	...	...	...	...	...	...	...	...	
...	...	*a*	...	...	...	...	...	...	...	...	...	...	...	...	...	...	...	...	...	...	...	
...	...	...	...	...	...	...	...	...	...	...	...	...	...	...	...	...	...	...	...	...	...	
...	...	...	...	...	...	...	...	...	...	...	...	...	...	...	...	...	...	...	...	...	...	
...	...	...	...	...	...	...	...	...	...	...	...	...	...	...	...	...	...	...	...	...	...	
1	1	...	1	1	1	1	1	1	...	...	...	...	...	...	...	...	...	...	...	...	...	
...	...	†2	...	...	...	...	...	...	...	...	...	...	...	...	...	...	...	...	...	...	...	
...	...	...	...	...	...	...	...	...	...	...	...	...	...	...	...	...	...	...	...	...	...	
...	...	§1	...	...	...	...	...	...	...	...	...	...	...	...	...	...	...	...	...	...	...	
...	...	...	...	...	...	...	...	...	...	...	...	...	...	...	...	...	...	...	...	...	...	
...	...	...	...	...	...	...	...	...	...	...	...	...	...	...	...	...	...	...	...	...	...	
...	...	...	...	...	...	...	...	...	...	...	...	...	...	...	...	...	...	...	...	...	...	

† Stamped bore. § Stamped chamber.

Digitized by Google

TABLE A.—

TOOLS.	Nature. B.L. 13·5-inch.	12-inch.	10-inch.	9·2-inch.	8-inch.	6-inch.	5-inch.	4-inch.	20-pr.	12-pr.	R.B.L. 7-inch.	40-pr.	40-pr. side closing.	20-pr.	12- and 9-pr.	6-pr.	R.M.L. 17·72-inch.	16-inch.	12·5-inch.
Vocabulary Section III.—continued.																			
Instruments, taking impressions, bore—*contd.* — Pieces, lengthening, No. 1, 4 feet	...	...	...	...	...	...	...	...	...	...	...	...	...	...	...	...	...	...	a
Plates, bore — No. 1	...	...	...	...	...	1	...	...	...	...	*1	...	...	...	...	...	...	...	1
Plates, bore — No. 2	...	...	...	...	...	...	...	...	*1	*1	...	...	...	*1	*1	...	...	...	...
Plates, bore — No. 3	...	...	...	...	...	...	1	1	...	...	...	*1	...	...	...	...	...	...	...
Plates, bore — No. 4	...	1	1	1	1	...	...	...	...	...	...	...	...	...	...	...	...	...	...
Plates, bore — No. 7	...	1	...	...	...	...	...	...	...	...	...	...	...	...	...	...	...	...	...
Plates, bore — special	...	...	...	...	...	...	...	...	...	...	...	...	...	...	...	...	1	1	...
Plates, chamber — No. 1	...	...	...	...	...	†1	...	...	...	...	...	...	...	...	...	...	...	...	*1
Plates, chamber — No. 2	...	...	...	...	...	...	...	...	1	1	...	...	...	...	...	...	...	...	...
Plates, chamber — No. 3	...	...	...	...	...	...	1	1	...	...	...	...	...	...	...	...	...	...	...
Plates, chamber — No. 4	...	1	1	1	1	...	...	...	...	...	...	...	...	...	...	...	...	...	...
Plates, chamber — No. 7	...	1	...	...	...	...	...	...	...	...	...	...	...	...	...	...	...	...	...
Plates, chamber — special	...	...	...	...	...	...	...	...	...	...	...	...	...	...	...	...	1	1	...
Instruments, taking impressions, vents — No. 1	...	...	...	...	...	...	...	...	...	...	...	...	...	...	...	...	...	...	*a
No. 2	...	...	...	...	...	...	...	...	...	...	...	...	...	...	...	...	...	...	...
Blocks, adjusting — No. 1, R.M.L.	...	...	...	...	...	...	...	...	...	...	...	...	...	...	...	...	...	...	1
Blocks, adjusting — No. 2, R.M.L.	...	...	...	...	...	...	...	...	...	...	...	...	...	...	...	...	...	...	...
Plates, No. 1 — A	...	...	...	...	...	...	...	...	...	...	...	...	...	...	...	...	...	...	*a
Plates, No. 1 — B	...	...	...	...	...	...	...	...	...	...	...	...	...	...	...	...	...	...	...
Plates, No. 1 — C	...	...	...	...	...	...	...	...	...	...	...	...	...	...	...	...	...	...	...
Lamps, examining bore — large	...	a	a	a	a	a	a	...	...	...	a	...	...	...	...	...	a	a	a
Lamps, examining bore — small	...	...	...	...	...	...	...	a	a	...	a	a	a	a	a	a	...	...	...
Micrometers, 24-inch*	...	a	a	a	a	a	a	...	...	...	...	...	...	...	...	...	...	...	...
Mirrors, examining guns	...	...	...	...	...	...	...	...	...	...	...	...	...	...	...	...	a	a	a
Scrapers, ordnance — exterior	...	a	a	a	a	a	a	a	a	a	a	a	a	a	a	a	a	a	a
Scrapers, ordnance — vent, half round	...	...	...	...	...	...	...	...	...	...	...	...	a	...	...	...	...	...	*a
Searchers — chisel-ended	...	...	...	...	...	...	...	...	...	...	a	a	a	a	a	a	...	...	...
Searchers — pointed	...	a	a	a	a	a	a	a	a	a	...	...	...	...	...	...	a	a	a
Stoves, lamp	...	...	...	...	...	a	a	a	a	a	a	a	a	a	a	a	...	...	...
Straight-edges	...	a	a	a	a	a	a	a	a	a	a	a	a	a	a	a	a	a	a
Vocabulary Section V. (1).																			
Bits, vent — 36-inch	...	a	a	a	a	...	...	...	...	...	...	...	...	...	...	...	a	a	*a
Bits, vent — 20-inch	...	...	...	...	...	a	a	...	...	...	...	...	...	...	...	...	...	...	...
Brushes, piasaba — B.L. bore	...	1	1	1	1	1	1	...	1	1	...	...	...	...	...	...	...	...	...
Brushes, piasaba — B.L. chamber	...	1	1	1	1	1	1	...	...	...	...	...	...	...	...	...	...	...	...
Brushes, piasaba — R.B.L.	...	...	...	...	...	...	...	...	...	...	1	a	a	1	1	1	...	...	...
Brushes, piasaba — R.M.L.	...	...	...	...	...	...	...	...	...	...	...	...	...	...	...	...	1	1	1
Rods, vent — 36-inch	...	a	a	a	a	...	...	...	...	...	...	...	...	...	...	...	a	a	a
Rods, vent — 20-inch	...	...	...	...	...	a	a	...	...	...	...	...	...	...	...	...	...	...	...
Wrenches, special — clamp	...	...	...	...	...	...	...	...	...	...	...	...	...	...	...	...	1	1	...
Wrenches, special — coupling	...	...	...	...	...	...	...	...	...	...	...	...	...	...	...	...	2	2	...
Wrenches, special — disc guide	...	...	...	...	...	...	...	...	...	...	...	...	...	...	...	...	1	1	...
Wrenches, special — feed spindle	...	...	...	...	...	...	...	...	...	...	...	...	...	...	...	...	1	1	...

a Common.

Digitized by Google

ntinued.

| Nature. | | |

TABLE B.—List of Tools required for the Cleaning, Examination, Bronze

Tools.	Nature. 8-inch and 68-pr.	42-pr.	32-pr.	24-pr.	18-pr.	12-pr.	9-pr.	6-pr.	3-pr.	32-pr. S.B. B.L.
Vocabulary Section III.										
Braces, smiths	*a*	*a*	*a*	*a*	*a*	*a*	*a*	*a*	*a*	*a*
Braces, smiths — Drills, vent	*a*	*a*	*a*	*a*	*a*	*a*	*a*	*a*	*a*	*a*
Braces, smiths — Rimers, vent, short ...	*a*	*a*	*a*	*a*	*a*	*a*	*a*	*a*		*a*
Brushes ... — gun, hard, S.B.	1	1	*a*	1	1	1	1	1	*b*	*a*
Brushes ... — gun, soft, large	1	...	...	...	...	...	...	...	...	...
Brushes ... — gun, soft, small	...	*a*	*a*	*a*	*a*	*a*	*a*	*a*	*a*	*a*
Brushes ... — paint, ground, 000 ...	...	...	...	...	...	...	...	...	...	...
Brushes ... — paint, unground, 000...	...	...	...	...	...	...	...	...	...	...
Brushes ... — paint, sash tool, No. 8	...	...	...	...	...	...	...	...	...	...
Gauges, vent, 15-inch ... ... sets	*a*	*a*	*a*	*a*	*a*	*a*	*a*	*a*	*a*	...
Holders, brush — No. 1	*a*	*a*	*a*	*a*	*a*	*a*	*a*	...	...	...
Holders, brush — No. 2	*a*	*a*	*a*	*a*	*a*	*a*	*a*	...	...	*a*
Holders, brush — No. 4	...	...	...	...	...	...	...	*a*	*a*	...
Instruments, taking impressions, vents, No. 1	*a*	*a*	*a*	*a*	*a*	*a*	*c*	*c*	*c*	...
Instruments, taking impressions, vents — Blocks, adjusting, No. 1, S.B.	*d* 1	1	1	1	1	1	*c*	*c*	*c*	...
Instruments, taking impressions, vents — Plates, No. 1, B.	*a*	*a*	*a*	*a*	*a*	*a*	*c*	*c*	*c*	...
Lamps, examining bore, small ...	*a*	*a*	*a*	*a*	*a*	*a*	*a*	*a*	*a*	*a*
Scrapers, ordnance — bore — round — crown	*a*	*a*	*a*	*a*	*a*	*a*	*a*	*a*	*a*	...
Scrapers, ordnance — bore — round — half round ...	*a*	*a*	*a*	*a*	*a*	*a*	*a*	*a*	*a*	*a*
Scrapers, ordnance — bore — round — round ... pairs	1	1	*a*	1	1	1	1	1	1	*a*
Scrapers, ordnance — bore — round — Holders ...	1	1 *		1		1		1		*
Scrapers, ordnance — bore — round — Tongs ...	*a*	*a*	*a*	*a*	*a*	*a*	*a*	*a*	*a*	*a*
Scrapers, ordnance — bore — round — Wrenches...	*a*	*a*	*a*	*a*	*a*	*a*	*a*	*a*	*a*	*a*
Scrapers, ordnance — chamber — medium ...	*a*	...	*a*	...	...	...	...	...	...	...
Scrapers, ordnance — chamber — small	...	...	*a*	...	...	*a*	...	...	...	...
Scrapers, ordnance — exterior	*a*	*a*	*a*	*a*	*a*	*a*	*a*	*a*	*a*	*a*
Scrapers, ordnance — vent — half round ...	*a*	*a*	*a*	*a*	*a*	*a*	*a*	*a*	*a*	*a*
Scrapers, ordnance — vent — spring	*a*	*a*	*a*	*a*	*a*	*a*	*a*	*a*	*a*	*a*
Searchers — pointed	*a*	*a*	*a*	*a*	*a*	*a*	*a*	*a*	*a*	*a*
Searchers — spring — 8 prongs ...	*a*	*a*	*a*	...	...	...	...	...	...	*a*
Searchers — spring — 6 prongs ...	...	...	...	*a*	*a*	...	...	...	...	...
Searchers — spring — 4 prongs ...	...	...	...	...	...	*a*	*a*	*a*	*e*	...
Searchers — spring — Wrenches ...	*a*	*a*	*a*	*a*	*a*	*a*	*a*	*a*	...	*a*
Stoves, lamp	*a*	*a*	*a*	*a*	*a*	*a*	*a*	*a*	*a*	*a*

Digitized by Google

Painting and Lacquering of the various natures of Cast-iron and Ordnance.

Remarks.

a. Common to all. One only of each required whatever the nature or number of guns to be cleaned or examined.

b. There is no hard brush for the 3-pr., the small soft is used instead.

} Issued as required for painting or lacquering.

..... } for lacquering only.
For end of bore }
..... }

c. The instrument, etc., is too large for these guns; a piece of wood is used.

d. One block for each nature.

For end of bore.
Used for scraping any part left untouched by the round scraper.
Used to scrape from the sides of the bore all lacquer and rust. The semi-circular scrapers are to be carefully ground to a sharp and even edge, to correspond exactly with the curve of the bore, and then fixed to the plates of the spring, which is attached to the stave. The instrument is to be inserted, and screwed out until the scrapers bear evenly and tightly against the sides of the bore; it is then to be worked up and down the whole length of the bore, being at the same time turned gradually round, until the bore is perfectly clean and smooth. This operation requires the united strength of three or four men. The Superintendent of the party is to see that the scrapers are re-sharpened as soon as they become blunt, and that they are kept screwed out tightly against the sides of the bore during the whole of the operation.
*Also S.B., B.L. 32-pr.
For holding round scrapers during grinding.
For fixing screws of scrapers, and expanding screws of holders.

} Only required for ordnance with Gomer chambers.

Old swords, numbers according to requirements.

e. The 4-prong spring searcher is too large for the 3-pr., the pointed searcher is used instead.
For searcher points.
For softening gutta percha.

Digitized by Google

TABLE C.

Quantities of Paint and Lacquer for Rifled Ordnance.

Description.		Quantities of Magnetic Oxide, each Coat.*		Lacquer for Bores, one Coat.	
Vocabulary Section V. (1).		lbs.	ozs.	lbs.	ozs.
Ordnance, B.L.	13·5-inch	7	8	4	12
	12 ,,	5	14	3	0
	10 ,,	6	0	4	0
	9·2 ,,	6	0	3	8
	8 ,, Mark VII	5	0	2	0
	6 ,,	3	0	1	8
	5 ,,	1	8	0	12
	4 ,,	1	0	0	12
Ordnance, R.B.L.	7-inch 82 cwt.	1	8	0	6
	7-inch 72 ,,	1	8	0	5
	40-pr. 35 ,,	0	8	0	4
	40-pr. 32 ,,				
	20 ,, 16 ,,	0	6	0	4
Ordnance, R.M.L.	17·72-inch	7	8	5	8
	16 ,,	5	0	4	8
	12·5 ,,	4	12	0	14
	12 ,, 35-ton	4	8	0	13
	12 ,, 25 ,,	3	4	0	12
	11 ,,	3	4	0	11
	10·4 ,,	5	0	4	8
	10 ,,	2	12	0	9
	9 ,,	2	0	0	8
	8 ,,	1	8	0	8
	8-inch howitzer 70-cwt.	1	4	0	8
	8-inch howitzer 46 ,,	0	14	0	5
	7 ,, 7 tons	1	0	0	6
	7 ,, 6½ ,,				
	7 ,, 90 cwt.	1	0	0	5
	6·6 ,,	1	4	0	8
	6·6 ,, howitzer	0	14	0	6
	6·3 ,, ,,	0	12	0	4
	80-pr.	1	4	0	8
	64 ,, 71 cwt.	1	2	0	6
	64 ,, 58 ,,				
	40 ,, Mark II	0	14	0	4
	25 ,,	0	12	0	3

*At certain stations the guns (and works) will be painted to harmonise with the surroundings of the work. Paint of various colours will therefore be required, and will be allowed in the proportions herein laid down for magnetic oxide.

N.B.—At Gibraltar the guns are painted to agree with the surrounding scenery and special proportions of paint are allowed accordingly.

At Malta the guns are painted light brown or stone colour.

Digitized by Google

TABLE D.

Quantities of Paint and Lacquer for the Exterior and Bores of S.B. Ordnance.

Description.				Quantities of Magnetic Oxide, each Coat.		Quantities of Lacquer for Bores, one Coat.	
Vocabulary Section V (1).				lbs.	ozs.	lbs.	ozs.
Ordnance, S.B.	Carronades	32-pr.		0	6	0	3
		24 ,,		0	6	0	3
		18 ,,		0	4	0	2
		12 ,,		0	4	0	2
	Guns	8-inch	65 cwt.	1	0	0	6
			60 ,,	1	0	0	6
			54 ,,	0	14	0	5
		68-pr.	112 ,,	1	8	0	10
			95 ,,	1	4	0	8
		42 ,,	84 ,,	1	4	0	6
			67 ,,	1	4	0	6
		32 ,,	63 ,,	1	2	0	6
			58 ,,	1	2	0	6
			56 ,,	1	2	0	6
			50 ,,	1	0	0	6
			48 *or* 50 cwt.	1	0	0	5
			45 cwt.	1	0	0	5
			42* ,,	0	12	0	5
			40 ,,	0	12	0	5
			39 ,,	0	12	0	5
			32 ,,	0	10	0	4
			25 ,,	0	8	0	4
		24 ,,	50 ,,	1	0	0	4
			48 ,,	1	0	0	4
			20 ,,	0	8	0	3
		18 ,,	42 ,,	0	12	0	4
			38 ,,	0	12	0	4
			34 ,,	0	12	0	3
		12 ,,	33 ,,	0	12	0	3
			32 ,,	0	8	0	2
		9 ,,	28 ,,	0	10	0	3
			24 ,,	0	8	0	2
		6 ,,	17 ,,	0	6	0	2
	Howitzers	10-inch		0	12	0	3
		8 ,,		0	8	0	3
		5½ ,,		0	6	0	2
	Mortars	13 ,,	100 cwt.	1	4	0	6
			81 ,,	1	0	0	6
			36 ,,	0	12	0	3
		10 ,,	52 ,,	1	0	0	4
			18 ,,	0	8	0	3
		8 ,,		0	6	0	2

* Also 32-pr. S.B. B.L. guns

Digitized by Google

TABLE E.

(*See paragraph* 205, *Part* 2.)

Browning Steel and Wrought-Iron Rifled Guns.

The following ingredients and stores will be allowed biennially for browning guns :—

Ingredients and Stores.	6-Gun Batteries.		
	16, and 13 prs. R.M.L.; and 6-pr. Q.F. Guns.	9-pr. R.M.L; and 3-pr. Q.F. Guns.	
Vocabulary Section II. (3).			
Sponges, G.S.*	1½	1	
Vocabulary Section IV.			To be mixed in soft water as under— *a* 3 quarts. *b* 2 quarts. *c* 2 pints. *d* 3 ,,
Acid, nitric ... ... ozs.	5	3½	
Methylated spirits ... ... ,,	3¾ *a*	2½ *b*	
Steel, tincture of ... ... ,,	9¾	6½	
Acid, hydrochloric ... ... lbs.	9	6	
Canvas, sail, No. 1† ... ... yds.	...	16	
Card, scratch* ... ... in.	27	18	
Cloth, emery, fine ... ...sheets	9	6	
Cloths, sponge	9	6	
Oil, olive ... ... gill	¾	½	
Potash, American, black ... lbs.	9	6	
Soap, yellow ... ... ,,	1½	1	
Miscellaneous Stores.			
Coal, Barnsley ... ...cwts.	9	6	
Vocabulary Section V. (1).			
Strips, iron, browned (to pattern tint*)	3	2	
Vocabulary Section VI.			
Brushes, shoe, shining*	1	1	
Pails, iron, galvanised, 3 gallons* ...	1	1	
Pans, earthenware, 6 quarts	1	1	Purchased locally.

N.B.—For 4 guns the proportions allowed will be two-thirds of those for 6 guns. For quick-firing guns the quantities for other numbers than six will be calculated on the above proportions.

* The articles marked thus * will be returned to store on completion of the process.

† Where there are no facilities for boiling.

Digitized by Google

TABLE F.

Table showing the Time and working Pay allowed for Scraping, Cleaning, and Painting the different natures of Iron Ordnance.

Description.	Scraping* and Cleaning Exterior and Interior.		Painting Exterior and Interior, one Coat.	
	Time for.	Amount.	Time for.	Amount.
	H. M.	s. d.	H. M.	s. d.
Vocabulary Section V (1).				
Ordnance, B.L. 12-inch	56 0	4 8	24 0	3 0
10 ,, ...	36 0	3 0	15 0	1 10½
9·2 ,, ...	36 0	3 0	11 30	1 5½
8 ,, ...	24 0	2 0	6 30	0 9¼
6 ,, ...	15 0	1 3	3 0	0 4½
5 ,, ...	5 0	0 5	2 0	0 3
4 ,, ...	5 0	0 5	2 0	0 3
Ordnance, R.B.L. 7-inch { 82 cwt. ... ... / 72 ,, ... }	10 0	0 10	1 30	0 2¼
40-pr. { 35 ,, ... / 32 ,, ... }	5 0	0 5	1 0	0 1½
20 ,, 16 cwt.	3 0	0 3	0 30	0 0¾
17·72-inch	40 0	3 4	8 30	1 0¾
16 ,, ...	36 0	3 0	8 0	1 0
12·5 ,, ...	26 0	2 2	4 0	0 6
12 ,, { 35 tons ... ... / 25 ,, ... }	24 0	2 0	4 0	0 6
11 ,, ...	20 0	1 8	3 0	0 4½
10·4 ,, ...	36 0	3 0	11 30	1 5¼
10 ,, ...	18 0	1 6	2 30	0 3¾
9 ,, ...	15 0	1 3	2 0	0 3
8 ,, ...	12 0	1 0	2 0	0 3
Ordnance, R.M.L. 8-inch howitzer { 70 cwt. ... ... / 46 ,, ... }	8 0	0 8	1 30	0 2¼
7-inch { 7 tons ... ... / 6½ ,, ... / 90 cwt. ... ... }	7 0	0 7	1 0	0 1½
6·6 ,, howitzer	12 0	1 0	2 0	0 3
6·3 ,, ,, ...	9 0	0 9	1 30	0 2¼
80-pr.	6 0	0 6	1 0	0 1½
64 ,, { 71 cwt. ... ... / 64 ,, ... / 58 ,, ... }	5 0	0 5	0 45	0 1¼
40 ,, ...	10 0	0 10	2 0	0 3
25 ,, ...	8 0	0 8	1 30	0 2¼
Ordnance, S.B. carronades { 32-pr. ... ... / 24 ,, ... / 18 ,, ... / 12 ,, ... }	6 0	0 6	1 0	0 1½
	4 0	0 4	1 0	0 1½
	3 0	0 3	0 30	0 0¾
guns ... { 8-inch { 65 cwt. / 60 ,, / 54 ,, }	8 0	0 8	1 30	0 2¼
68-pr. { 112 ,, / 95 ,, }	10 0	0 10	1 30	0 2¼
42 ,, { 84 ,, / 67 ,, }	8 0	0 8	1 30	0 2¼
32 ,, { 63 ,, / 58 ,, / 56 ,, }				

* The bores of rifled ordnance will not be scraped.

Digitized by Google

TABLE F—*continued.*

Description.				Scraping* and Cleaning Exterior and Interior.		Painting Exterior and Interior, one Coat.	
				Time for.	Amount.	Time for.	Amount.
				H. M.	s. d.	H. M.	s. d.
Ordnance, S.B.	guns ...	32 pr.	50 cwt.	7 0	0 7	1 15	0 2
			48 *or* 50 cwt.				
			45 cwt.				
			42† ,,				
			40 ,,				
			39 ,,				
			32 ,,	6 0	0 6	1 0	0 1½
			25 ,,				
		24 ,,	50 ,,	7 0	0 7	1 15	0 2
			48 ,,				
			20 ,,				
		18 ,,	42 ,,	6 0	0 6	1 0	0 1½
			38 ,,				
			34 ,,				
		12 ,,	33 ,,				
			22 ,,				
		9 ,,	28 ,,	4 0	0 4	0 45	0 1¼
			24 ,,				
		6 ,,	17 ,, ...	3 0	0 3	0 45	0 1¼
	howitzers ...	10-inch	... ...	5 0	0 5	1 0	0 1½
		8 ,,	... ...	4 0	0 4	0 45	0 1¼
		5½ ,,	... ...	3 0	0 3	0 30	0 0¾
	mortars ...	13 ,,	100 cwt.	6 0	0 6	1 0	0 1½
			81 ,,				
			36 ,,				
		10 ,,	52 ,,	4 0	0 4	0 45	0 1¼
			18 ,, ...	3 9	0 3	0 30	0 0¾
		8 ,,	... ...	2 0	0 2	0 30	0 0¾

* The bores of rifled ordnance will not be scraped.
† Also 32-pr. S.B.B.L. guns.

Digitized by Google

TABLE G.

The following Table gives the Quantity of Paint, &c., required for one of each of the following Carriages and Slides, L. for one Coat.

	Description.		Paint prepared, magnetic oxide.*	Putty.	Remarks.
	Vocabulary Section V. (1).		lb. oz.	lb. oz.	
Carriages, garrison	B.L.	12-in.	6 0	0 12	
		6-in. V.C.P. Mk.	1 8	—	
	R.B.L.	7-in. Moncrieff	14 0	1 8	With slide, L.
		40-pr. common, T	2 0	0 4	¾ gill of boiled linseed oil for coins.
	R.M.L.	17·72-in.	10 0	1 0	
		16-in.	6 8	1 0	Turret.
		12·5-in. casemate or dwarf	5 8	0 12	With hydraulic buffer.
		12·5-in. casemate or dwarf O.P.	4 12	0 12	Without hydraulic buffer.
		12·5-in. small port, 7-ft. recoil	6 0	0 12	With hydraulic buffers.
		12·5-in. small port, 6-ft. recoil	5 8	0 12	Without hydraulic buffers.
		12-in. 35 tons	4 12	0 12	
		11-in. (and 12-in. 25 tons)	4 0	0 12	
		10·4-in.	7 0	0 12	
		10-in. casemate, low	3 0	0 12	
		10-in. casemate or dwarf			
		10-in. small port	4 0	0 12	
		9-in. casemate or dwarf	2 12	0 8	¾ gill of boiled linseed oil for coins.
		9-in. Moncrieff	24 0	4 0	With slide, L.
		8-in. elevation	2 12	0 8	
		7-in. casemate or dwarf	2 8	0 8	¾ gill of boiled linseed oil for coins.
		7-in. Moncrieff	14 0	2 0	With slide, L.
		64-pr. 71 cwt. and 64 cwt. common No. 1,	2 0	0 6	¾ gill of boiled linseed oil for coins.
		64-pr. 58 cwt. common No. 2			
		64-pr. 58 cwt. Moncrieff.	12 0	1 8	With slide, L.
	barbette, B.L.	10-in. Mark I.	12 0	1 0	
		10-in. ,, II.			
		9·2-in. ,, I.			
		9·2-in. ,, II.			
		8-in.	12 0	1 0	
		6-in.	12 0	1 0	
	disappearing, B.L.	10-in.	50 0	1 12	
		9·2-in.	50 0	1 12	
		6-in.	30 0	1 8	With shield.
		6-in.	17 0	1 0	Without shield.

* At certain stations the guns, carriages, and slides (and work) will be painted to harmonise with the surroundings of the work. Paint of various colours will therefore be required, and will be allowed in the proportions herein laid down for magnetic oxide.

Digitized by Google

TABLE G—*continued.*

Description.				Paint prepared, magnegtic oxide.*	Putty.	Remarks.
				lb. oz.	lb. oz.	
Carriages, garrison, sliding, medium			No. 1 (R.B.L. 7-in.)...	3 4	0 8	
			No. 4 (R.B.L. 40-pr.)	3 8	0 8	With hydraulic buffer.
			No. 5 (R.B.L. 20-pr.)	2 8	0 8	
			No. 6 (S.B.B.L. 32-pr.)	3 8	0 8	
			No. 7 (R.M.L. 7-in. 6½ tons 6-ft. parapet)	3 8	0 8	
			No. 8 (R.M.L. 64-pr. 64 cwt. Mark III, 6-ft. parapet)	3 0	0 8	For circular buffer.
			No. 9 (R.M.L. 64-pr. 64-cwt., 5-ft. 6-in. parapet)	3 0	0 8	
			No. 14 (R.M.L. 40-pr.)	3 8	0 4	
Slides, L.	B.L. ...		12-in.	11 0	1 4	
			6-in. V.C.P. Mk. I, with shield and pivot	12 8	0 4	
	R.M.L. ...		17·72-in.	32 0	1 8	With hydraulic buffer.
			16-in.	58 0	4 0	Turret, with hydraulic buffers.
		12·5-in.	casemate (with traversing gear)	7 12	1 2	With hydraulic buffer.
			casemate (with traversing gear)	7 0	1 2	Without hydraulic buffer.
			dwarf (with traversing gear)	8 12	1 2	With hydraulic buffer and pivot block.
			dwarf (with traversing gear)	8 0	1 2	With pivot block and without hydraulic buffer.
			small port, 7-ft. recoil	7 12	1 2	Without hydraulic buffers.
			small port, 6-ft. recoil	8 4	1 2	With hydraulic buffers.
		12-in. 35 tons, dwarf "C" (with traversing gear)		8 12	1 2	With hydraulic buffer and pivot block.
		11-in. (and 12-in. 25 tons)	casemate (with traversing gear)	7 0	1 2	With hydraulic buffer.
			dwarf (with traversing gear)	8 8	1 2	With hydraulic buffer and pivot block.
			7-ft. parapet, "C" (with traversing gear)	12 8	1 4	With hydraulic buffers.
		10·4-in. (with traversing gear)		19 0	1 0	With pivot block.

* At certain stations the guns, carriages, and slides (and work) will be painted to harmonise with the surroundings of the work. Paint of various colours will therefore be required, and will be allowed in the proportions herein laid down for magnetic oxide.

Digitized by Google

TABLE G—*continued.*

Description.				Paint prepared, magnetic oxide.*	Putty.	Remarks.
				lb. oz.	lb. oz.	
	R.M.L. ...	10-in.	casemate (with traversing gear)	6 8	1 0	With hydraulic buffer.
			dwarf (with traversing gear)	8 8	1 2	With hydraulic buffer and pivot block.
			small port (with traversing gear)	6 8	1 0	With hydraulic buffer.
			7-ft. parapet "C" (with traversing gear)	12 8	1 4	With hydraulic buffers.
		9-in. ...	7-ft. parapet "C" (with traversing gear)	11 0	1 4	With hydraulic buffers.
			casemate (with traversing gear)	5 12	1 0	With hydraulic buffer.
			dwarf (with traversing gear)	7 10	1 2	With hydraulic buffer and pivot blocks.
		8-in. elevation ...		7 0	1 0	
Slides, L.		7-in. ...	casemate ...	3 8	1 0	With hydraulic buffer.
			dwarf ...	4 2	1 0	With hydraulic buffer and pivot blocks.
	barbette, B.L.	10-in.	Mark I.† ...	19 0	1 0	With pivot block
			,, II.† ...	40 0	1 12	
		9·2-in.	,, I.† ...	19 0	1 0	
			,, II.† ...	40 0	1 12	
		8-in.		19 0	1 0	
		6-in.		21 0	1 3	
	medium	Nos. 1 to 3 (R.B.L. 7-in.)		5 0	0 8	
		No. 4 (R.B.L. 40-pr.)		4 0	0 8	
		No. 5 (R.B.L. 20-pr.)		3 0	0 8	
		No. 6 (8.B.B.L. 32-pr.)		4 0	0 8	
		No. 7 (R.M.L. 7-in. 6½ tons)		5 8	0 12	
		No. 8 (R.M.L. 64-pr. 64 cwt. Mark III 6-ft. parapet)		4 0	0 12	With circular buffer and pivot block.
		No. 9 (R.M.L. 64-pr. 64 cwt., 5-ft. 6-in. parapet)		4 0	0 1½	With hydraulic buffer and pivot block.
		No. 10 (R.M.L. 40-pr.)		4 8	0 4	With hydraulic buffer.
Yokes, B.L.	12-in.			5 8	0 8	

* At certain stations the guns, carriages, and slides (and work) will be painted to harmonise with the surroundings of the work. Paint of various colours will therefore be required, and will be allowed in the proportions herein laid down for magnetic oxide. † With traversing gear.

N.B.—At Gibraltar the mountings are painted to agree with the surrounding scenery, and special proportions of paint are allowed accordingly.

At Malta the mountings are painted light brown or stone colour.

Digitized by Google

TABLE H.

The following Table gives the time and working pay for Scraping, Cleaning, and Painting one of each of the following Carriages and Slides, L.

Description.	Scraping and Cleaning.		Painting.				Remarks.
			Priming, or first Coat.		Stopping, and second Coat.		
	Time for.	Amount.	Time for.	Amount.	Time for.	Amount.	
Vocabulary Section V. (1).	H. M.	s. d.	H. M.	s. d.	H. M.	s. d.	
Carriages, garrison: B.L. 12-inch	12 0	1 0	8 0	1 0	11 0	1 4½	
6-inch V.C.P., Mark I...	1 30	0 1½	2 0	0 3	2 0	0 3	
R.B.L. 7-inch Moncrieff	24 0	2 0	21 0	2 7½	23 0	2 10½	
R.B.L. 40-pr. common, No. 2	3 0	0 3	3 0	0 4½	3 0	0 4½	
R.M.L. 17·72-inch	12 0	1 0	11 0	1 4½	12 0	1 6	
R.M.L. 16-inch (turret)	14 0	1 2	10 0	1 3	12 0	1 6	
R.M.L. 12·5 ,, casemate or dwarf ...	13 0	1 1	9 0	1 1½	12 0	1 6	With hydraulic buffer.
R.M.L. 12·5 ,, ,, ,, O.P.	12 0	1 0	8 0	1 0	11 0	1 4½	Without hydraulic buffer.
R.M.L. 12·5 ,, small port 7 ft. recoil ...	15 0	1 3	10 0	1 3	13 30	1 8½	With hydraulic buffers.
R.M.L. 12·5 ,, small port 6 ,, ,, ...	14 0	1 2	9 0	1 1½	12 30	1 6¾	Without hydraulic buffers.
R.M.L. 12 ,, 35 tons	12 0	1 0	8 0	1 0	11 0	1 4½	
R.M.L. 11 ,, (and 12-in. 25 tons)							
R.M.L. 10·4 ,, ...	11 0	0 11	8 0	1 0	10 0	1 3	
R.M.L. 10 ,, casemate, low... ,, or dwarf	11 0	0 11	7 30	0 11¼	10 0	1 3	
R.M.L. 10 ,, small port	12 0	1 0	8 0	1 0	11 0	1 4½	
R.M.L. 9 ,, casemate or dwarf ...	10 0	0 10	7 0	0 10	9 0	1 1½	
R.M.L. 9 ,, Moncrieff	70 0	5 10	50 0	6 3	60 0	7 6	
R.M.L. 8 ,, elevation	10 0	0 10	7 0	0 10½	9 0	1 1½	With hydraulic buffer.
R.M.L. 7 ,, casemate or dwarf ...	10 0	0 10	7 0	0 10	9 0	1 1½	
R.M.L. 7 ,, Moncrieff	40 0	3 4	30 0	3 9	36 0	4 6	

Digitized by Google

Carriages, garrison	R.M.L. 64-pr.	71 cwt. and 64 cwt., common, No. 1	3	0	0	3	0	0	4½	3	0	0	4½		
		58 cwt., common, No. 2	32	0	2	8	25	0	3 1½	30	0	3	9		
	barbette, B.L.	58-cwt. Moncrieff	14	0	1	2	10	0	1 3	13	0	1	7½		
		9 10-inch Mark I	14	0	1	2	10	0	1 3	12	0	1	6		
		9 ·2-inch I	14	0	1	2	10	0	1 3	13	0	1	7½		
		9 ·2-inch II	14	0	1	2	10	0	1 3	12	0	1	6		
		8-inch	14	0	1	2	10	0	1 3	13	0	1	7½		
		6-inch	14	0	1	2	10	0	1 3	13	0	1	7½		
	disappearing B.L.	10-inch	50	0	4	2	43	0	5 4½	48	0	6	0		With shield.
		9 ·2-inch	42	0	3	6	34	0	4 3	40	0	5	0		Without shield.
		6-inch	23	0	2	4	22	0	2 9	26	0	3	3		
	sliding, medium	No. 1 (R.B.L. 7-inch)	10	0	0	10	7	0	0 10½	9	0	1	1½		With hydraulic buffer.
		,, 4 (R.B.L. 40-pr.)	8	0	0	8	5	30	0 8¼	7	0	0	10½		
		,, 5 (,, 20 ,,)	6	30	0	6½	4	0	0 6	5	0	0	7½		
		,, 6 (S.B.L. 32-pr.)	3	30	0	3½	3	30	0 5½	4	0	0	6		
		,, 7 (R.M.L. 7-inch 6½ tons, 6 ft. parapet).	9	0	0	9	7	0	0 10½	8	0	1	0		
		,, 8 (R.M.L. 64-pr. 64 cwt. Mark III gun, 6ft. parapet).	10	0	0	10	7	0	0 10½	9	0	1	1½		For circular buffer.
		,, 9 (R.M.L. 64-pr. 64 cwt., 5 ft. 6 in. parapet).	9	0	0	9	6	0	0 9	8	0	1	0		
		,, 14 (R.M.L. 40-pr.)	5	0	0	5	4	0	0 6	4	30	0	6¾		
	B.L.	12-inch	22	0	1	10	15	0	1 10½	20	0	2	6		
		6-inch V.C.P., Mark I, with shield and pivot	10	30	0	10½	12	0	1 6	13	0	1	7½		
Slides, L.	R.M.L.	17·72-inch	36	0	3	0	33	0	4 1½	36	0	4	6		
		16-inch (turret)	154	0	12	10	119	0	14 10½	139	0	17	4½		With hydraulic buffer.
		casemate (with traversing gear)	16	0	1	4	10	0	1 3	15	0	1	10½		With hydraulic buffer.
		dwarf (with ,, traversing gear)	15	0	1	3	10	0	1 3	13	30	1	8¼		Without hydraulic buffer.
			18	0	1	6	11	0	1 4½	16	0	2	0		With hydraulic buffer and pivot block.
		12·5 ,, ,,	17	0	1	5	10	0	1 3	15	0	1	10½		With pivot block, but without hydraulic buffer.
		small 7 feet recoil port (with traversing gear)	17	0	1	5	11	0	1 4½	16	0	2	0		Without hydraulic buffers.

Digitized by Google

TABLE H—*continued.*

Description.					Scraping and Cleaning.		Painting. Priming, or first Coat.		Painting. Stopping, and second Coat.		Remarks.
					Time for.	Amount.	Time for.	Amount.	Time for.	Amount.	
					H. M.	*s. d.*	H. M.	*s. d.*	H. M.	*s. d.*	
Slides, I.	R.M.L.	12·5-in.	small port	6 feet recoil (with traversing gear)	18 0	1 6	12 0	1 6	17 0	2 1½	With hydraulic buffers.
		12-inch 35 tons, dwarf "C" (with traversing gear)			18 0	1 6	11 0	1 4½	16 0	2 0	With hydraulic buffer and pivot block.
		11-inch (and 12-inch 25 tons)...		casemate ...	16 0	1 4	10 0	1 3	15 0	1 10½	With hydraulic buffer.
				dwarf ...	18 0	1 6	11 0	1 4½	16 0	2 0	With hydraulic buffer and pivot block.
				7 ft. parapet "C" ...	19 0	1 7	16 0	2 0	19 0	2 4½	With hydraulic buffer.
		10·4-inch			20 0	1 8	15 0	1 10½	18 0	2 3	With pivot block.
		10-inch		casemate ...	13 0	1 1	9 0	1 1½	12 0	1 6	With hydraulic buffer.
				dwarf	14 0	1 2	10 0	1 3	13 0	1 7½	With hydraulic buffer and pivot block.
				small port ...	15 0	1 3	10 0	1 3	13 30	1 8½	With hydraulic buffer.
				7 ft. parapet "C"	19 0	1 7	16 0	2 0	19 0	2 4½	
		9 ,,		casemate ...	12 0	1 0	8 0	1 0	11 0	1 4½	With hydraulic buffer.
				dwarf	14 0	1 2	10 0	1 3	13 0	1 7½	With hydraulic buffer and pivot block.
				7 ft. parapet "C"	17 0	1 5	14 0	1 9	17 0	2 1½	
		8 ,, elevation ...			11 0	0 11	8 0	1 0	10 0	1 3	
	barbette, B.L.	10-inch	Mark I ...		20 0	1 8	15 0	1 10½	18 0	2 3	With pivot block.
			,, II ...		48 0	4 0	40 0	5 0	44 0	5 6	
		9·2-inch	,, I ...		20 0	1 8	15 0	1 10½	18 0	2 3	
			,, II ...		48 0	4 0	40 0	5 0	44 0	5 6	
		8-inch			20 0	1 8	15 0	1 10½	18 0	2 3	
		6-inch			24 0	2 0	17 0	2 1½	20 0	2 6	

(with traversing gear)

Digitized by Google

Slides, L.	R.M.L. 7-inch	casemate	12	0	1	0	8	0	1	0	11	0	1 4½	With hydraulic buffer.
		dwarf	12	0	1	0	9	0	1	1½	12	0	1 6	With hydraulic buffer and pivot block.
	medium	Nos. 1 to 3 (R.B.L. 7-inch) ...	11	0	0	11	8	0	1	0	10	0	1 3	
		No. 4 (R.B.L. 40-pr.) ...	8	30	0	8½	6	0	0	9	7	30	0 11½	
		,, 5 (,, 20 ,,) ...	4	30	0	4½	3	30	0	5½	4	0	0 6	
		,, 6 (S.B. B.L. 32-pr.) ...	3	0	0	3	3	0	0	4½	3	30	0 5½	
		,, 7 (R.M.L. 7-inch 6½ tons) ...	12	0	1	0	10	0	1	3	11	0	1 4½	With circular buffer and pivot block.
		,, 8 (R.M.L. 64-pr. 64 cwt. Mark III gun, 6 ft. parapet)	12	0	1	0	9	0	1	1½	11	0	1 4½	
		,, 9 (R.M.L. 64-pr. 64 cwt., 5 ft. 6 in. parapet)	11	0	0	11	8	0	1	0	10	0	1 3	With hydraulic buffer and pivot block.
		,, 10 (R.M.L. 40-pr.)	6	0	0	6	5	0	0	7½	5	30	0 8¾	With hydraulic buffer.
Yokes, B.L. 12-inch			9	0	0	9	8	0	1	0	10	0	1 3	

Digitized by Google

TABLE I.

Quantity of Material required for repairing bare places and painting one coat, for the following Articles.

Description.	Paint prepared.								Putty.		Remarks.
	Lead Colour.		Magnetic Oxide.		Stone Colour.		Red.				
Vocabulary Section II. (2).	lbs.	ozs.	lbs.	ozs.	lbs.	ozs.	lbs.	ozs.	lbs.	ozs.	
Drugs ... gun { 25 tons	21	8	—	—	—	—	—	—	2	4	With brake and movable bolster.
gun { 5 ,, ...	7	8	0	12	—	—	—	—	1	0	
large	8	8	0	12	—	—	—	—	1	0	
medium	4	0	0	6	—	—	—	—	0	8	
small	3	0	0	6	—	—	—	—	0	8	
Vocabulary Section II. (3).											
Carts low, projectile	6	0	—	—	—	—	—	—	0	10	
shot	12	0	—	—	—	—	—	—	1	8	
sling	9	8	—	—	—	—	—	—	1	2	
trench	—	—	—	—	—	—	3	12	0	12	
Packsaddlery, artillery, { 7-pr. (200 and 150 lbs.)	—	—	0	4	—	—	—	—	—	—	And 2 oz. copal varnish.
cradles, R.M.L. { 2·5 inch... ...	—	8	—	—	—	—	—	—	0	1	

Digitized by Google

Description.	Paint prepared.				Putty.		Remarks.
	Lead Colour.*		Magnetic Oxide.*				
Vocabulary Section V. (1).	lbs.	ozs.	lbs.	ozs.	lbs.	ozs.	
Apparatus, lifting guns, Hurst pattern...	21	0	—	—	1	8	
Axletrees, transporting: bed, howitzer, R.M.L.	3	12	0	4	0	6	Including the wheels.
Axletrees, transporting: slides, iron, R.M.L. (11-inch (also 12-inch 25 tons); 10-inch ... ...; 9 ,, ...; 7 ,, ...)	4	0	—	—	0	6	,, ,,
Axletrees, transporting: slides, medium, wood	2	8	—	—	0	4	,, ,,
Barrows ... magazine ... double	1	4	—	—	0	2	
Barrows ... magazine ... single	1	0	—	—	0	2	
Barrows ... magazine lamps	0	8	—	—	0	2	
Barrows ... powder	1	8	—	—	0	4	
Barrows, projectile ... Nos. 1 to 5	—	—	0	8	—	—	
Barrows, projectile ... Nos. 10 to 12	0	12	—	—	0	2	
Barrows, projectile ... road	1	8	—	—	0	1	
Barrows, projectile ... shingle	2	0	—	—	0	4	
Bars, splinter, limber: field, R.B.L., 20-pr.	0	6	—	—	0	1	
Bars, splinter, limber: siege, wood							
Bearers, shot, R.B.L., R.M.L., or S.B.	—	—	0	4	—	—	
Beds, howitzer, R.M.L.	—	—	3	12	0	4	
Beds, mortar: 13-inch 100 cwt.... land service	7	0	—	—	1	0	
Beds, mortar: 13-inch 100 cwt.... naval							
Beds, mortar: 13-inch 36 ,, ...	—	—	1	4	—	—	
Beds, mortar: 10 ,, 18 ,, ...	—	—	1	0	—	—	
Beds, mortar: 8 ,, 9 ,, ...	—	—	0	12	—	—	
Beds, mortar: $5\frac{1}{2}$,, ...	2	0	—	—	0	4	
Beds, mortar: $4\frac{2}{5}$,, ...							
Beds, R.M.L. 7-pr., 200 lbs.	1	12	—	—	0	4	
Buckets, sponge, garrison	0	4	—	—	—	—	

* At certain stations where guns and mountings are painted to harmonise with the surroundings of the work, other colours may be allowed for the beds, carriages, &c., in the same proportions as herein laid down for lead colour and magnetic oxide.

Digitized by Google

TABLE I—*continued.*

Description.	Paint prepared.				Putty.		Remarks.
	Lead Colour.*		Magnetic Oxide.*				
	lbs.	ozs.	lbs.	ozs.	lbs.	ozs.	
Capstans, crab	4	0	—	—	0	8	
Carriages, field (with limber) ... B.L., 12-pr.	11	4	—	—	1	0	¼ gill of raw linseed oil for side arms to each carriage.
R.B.L. 20-pr.	14	4	—	—	0	8	
R.B.L. 12 ,, ...	13	12	—	—	1	8	
R.B.L. 9 ,, ...	13	0	—	—	1	8	
R.B.L. 6 ,, service	11	0	—	—	1	4	
R.B.L. 6 ,, special	11	8	—	—	1	4	
R.M.L. 25-pr.	10	4	—	—	1	4	
R.M.L. 16 and 9-pr.	11	12	—	—	1	4	
R.M.L. 12-pr.†							
R.M.L. 7 ,, ...	10	0	—	—	1	0	
S.B. ... 24 pr. howitzer	14	0	—	—	1	8	
S.B. ... 12 ,, gun	14	4	—	—	1	8	
S.B. ... 12 ,, howitzer	12	8	—	—	1	8	
S.B. ... 9 ,, ...	13	8	—	—	1	8	
S.B. ... 6 ,, ...	12	0	—	—	1	4	
S.B. ... 3 ,, ...							
S.B. ... 4⅘-inch howitzer	9	0	—	—	1	0	
Carriages, garrison ... R.B.L. 40-pr., common wood	5	0	0	8	0	12	
R.B.L. 40-pr., common converted non-recoil	6	4	0	8	0	12	
R.M.L., 64-pr., 58-cwt., depression, iron	—	—	2	0	0	6	
10-inch howitzer dwarf	5	0	—	—	0	12	
10-inch howitzer rear chock	5	0	0	4	0	12	
68-pr. 112 cwt.	6	12	—	—	1	0	
S.B.... 8-inch ... 65-cwt. common (also 60-cwt.)	5	0	0	8	0	12	
S.B.... 8-inch ... 65, 60, and 54-cwt., rear chock	5	0	0	4	0	12	
S.B.... 8-inch ... 54-cwt., dwarf...	5	0	—	—	0	12	
S.B.... 8-inch ... howitzer dwarf	4	4	—	—	0	12	
S.B.... 8-inch ... howitzer rear chock ...	5	0	0	4	0	12	

Digitized by Google

Carriages, garrison ...	S.B. ...	32-pr. ...	63-cwt. ...	common ...	5	0	0	8	0	12		
				dwarf	5	0	—	—	0	12		
			58 or 56-cwt., common, wood		5	0	0	8	0	12		
			56-cwt., common, cast-iron		—	—	2	0	—	—		
			50 or 45-cwt., common ...		5	0	0	8	0	12		
			50-cwt., dwarf		5	0	—	—	0	12		
		24-pr., 50-cwt.	common	iron	—	—	1	12	—	—		
				wood	5	0	0	8	0	12		
			dwarf		5	0	—	—	0	12		
		18-pr., 42 cwt.	common	iron	—	—	1	12	—	—		
				wood	4	4	0	8	0	12		
			dwarf		4	4	—	—	0	12		
		12-pr., 34 cwt....			—	—	1	8	—	—		
		9 ,, 28 ,, ...										
		6 ,, 23 ,, ...			—	—	1	4	—	—		
	sliding, medium	No. 2			4	8	—	—	0	4		
		,, 3										
		,, 10										
		,, 11										
		,, 12										
		,, 13										
		,, 15										
		,, 16			6	12	—	—	1	0		
		,, 17										
		,, 18			6	0	—	—	1	0		
		,, 19			4	8	—	—	1	0		
		,, 20										
		,, 21			6	12	—	—	1	0		
		,, 22										
		,, 23										
		,, 24			5	0	—	—	0	12		
		,, 25										
Carriages, mountain, R.M.L.	4-inch howitzer				2	12	—	—	0	4	½ gill of raw linseed oil for side arms to each carriage.	
	15-pr.				2	8	—	—	0	4		
	7 ,,	200 lbs. (with limber)			4	0	—	—	0	6		
		150 ,, ,, ...			2	4	—	—	0	4		
	2·5-inch				2	8	—	—	0	4		

* At certain stations where guns and mountings are painted to harmonise with the surroundings of the work, other colours may be allowed for the beds, carriages, &c., in the same proportions as herein laid down for lead colour ond magnetic oxide.

† 6 oz. of lamp-black paint in addition for trays.

Digitized by Google

TABLE I—*continued.*

Description.			Paint prepared.				Putty.		Remarks.
			Lead Colour.*		Magnetic Oxide*.				
			lbs.	ozs.	lbs.	ozs.	lbs.	ozs.	
Carriages ...	parapet		—	8	—	—	—	—	
	Q.F., 3-pr., travelling		4	8	—	—	0	4	
	B.L. ...	5-inch	14	8	—	—	1	4	
		4 ,, ...							
	R.B.L. 40-pr.	6-ft. parapet	17	4	—	—	2	0	
		wood							
	R.M.L.	8-inch, 70 cwt. howitzer	14	8	—	—	1	8	
		8 ,, 46 ,, ,, ...							
Carriages, siege (with limber) ...		6·6 ,, gun	14	8	—	—	1	8	
		6·6 ,, howitzer	14	0	—	—	1	8	
		6·3 ,, ,, ...	13	0	—	—	1	8	
		64-pr., wood	12	8	—	—	1	4	
		40 ,, ...							
		40 ,, ...	15	8	—	—	1	8	Also top carriages.
		25 ,, ...	13	4	—	—	1	8	
	S.B. ...	32-pr., 50 cwt....	15	8	—	—	2	0	
		24 ,, 50 ,, ...	15	0	—	—	2	0	¼ gill of raw linseed oil for side arms to each carriage.
		18 ,, ...	17	0	—	—	2	0	
	mortar	10-inch	13	8	—	—	1	8	
		8 ,, ...	10	8	—	—	1	4	
Carriages ...	siege (without limber)	B.L. 4-inch	8	12	—	—	0	12	
		R.B.L., 40-pr., 6-ft. parapet	9	0	—	—	0	12	
	transporting guns up inclines		—	—	6	0	0	12	For 12·5-inch guns
Cases, cartridge ...	A and C		3	8	—	—	—	—	For 10 cases.
	Nos. 1, 2, and 3								
	,, 4, 5, 6, and 7		2	8	—	—	—	—	
Crabs, hoisting guns ...	50 tons		5	8	4	8	0	12	
	25 ,, ...		4	0	3	0	0	12	
Decks, mortar, 13-inch			10	8	—	—	2	0	
Frames	cover, ordnance, large (16½ ft. × 8 ft.)		1	12	—	—	0	4	
	iron, roller	one horse	4	8	2	0	0	8	
		two ,, ...	6	0	2	12	0	12	
	store, hydraulic jack, G.S.		—	—	0	12	—	—	

Digitized by Google

| | | |

TABLE I—*continued.*

Description.	Paint prepared.								Putty.		Remarks.
	Lead Colour.		Magnetic Oxide.		Stone Colour.		Red.				
	lbs.	ozs.	lbs.	ozs.	lbs.	ozs.	lbs.	ozs.	lbs.	ozs.	
Posts, picket { 8 feet	0	12	—	—	—	—	—	—	—	—	
Posts, picket { 6 ,, ... } { 5 ,, ... }	0	4	—	—	—	—	—	—	—	—	
Scotches, recoil	1	0	—	—	—	—	—	—	0	1	
Shafts { (single)	0	4	—	—	—	—	—	—	0	1	
Shafts { (framed)	0	8	—	—	—	—	—	—	0	1	
Skidding, iron { (10 feet)...	—	—	2	0	—	—	—	—	—	—	
Skidding, iron { (4 ,,)...	—	—	1	0	—	—	—	—	—	—	
Sleighs, gun, 12 tons to 38 and 25 tons ...	18	0	—	—	—	—	—	—	2	4	
Slides, L., medium { No. 11 ... ... } { ,, 12 ... ... } { ,, 13 ... ... }	11	8	—	—	—	—	—	—	1	0	
Slides, L., medium { ,, 14	14	8	—	—	—	—	—	—	1	8	
Slides, L., medium { ,, 15	9	0	—	—	—	—	—	—	1	0	
Slides, L., medium { ,, 16 ... ... } { ,, 17 ... ... } { ,, 18 ... ... } { ,, 19 ... ... }	16	0	—	—	—	—	—	—	1	12	
Stages, loading	11	8	—	—	—	—	—	—	1	0	
Swingletrees	3	8	0	4	—	—	—	—	0	2	
Timber, spars for sheers, 70 ft. (2 to a set) set	0	2	—	—	—	—	—	—	—	—	
Trollies { loading, R.M.L. 17·72-inch ...	3	8	—	—	—	—	—	—	3	8	
Trollies { shell, R.M.L. 17·72-inch	2	12	—	—	—	—	—	—	0	2	
Trucks, ballast, 4 feet 8½ inches gauge ...	0	12	—	—	—	—	—	—	—	—	
Turntables, R.M.L. 12·5-inch gun	10	0	5	8	—	—	—	—	3	0	
Wagons { ammunition and store, R.A. ...	—	—	—	—	—	—	75	0	—	—	
Wagons { ammunition (with limbers) { B.L. 12-pr.	16	0	—	—	—	—	—	—	2	0	
Wagons { ammunition (with limbers) { R.B.L. { 40-pr. ...	12	0	—	—	—	—	—	—	1	0	
Wagons { ammunition (with limbers) { R.B.L. { 20 ,,	14	12	—	—	—	—	—	—	1	12	
Wagons { ammunition (with limbers) { R.B.L. { 12 ,,	15	12	—	—	—	—	—	—	1	12	
Wagons { ammunition (with limbers) { R.B.L. { 9 ,,											

Digitized by Google

ammunition (with limbers)	R.B.L., 6-pr.	service	13	8	—	—	—	—	—	1	12
		special	10	0	—	—	—	—	—	1	2
	R.M.L.	16 pr.	14	0	—	—	—	—	—	1	8
		13 ,, *									
		9 ,,									
	24-pr. howitzer										
	S.B.	12 ,, gun howitzer	14	12	—	—	—	—	—	1	12
		9 ,,									
		6 ,,									
Wagons	Artillery		15	0	—	—	—	—	—	2	0
	forge, R.A. (with limber)	Mark I.	13	8	—	—	—	—	—	1	8
		,, II.	15	0	—	—	—	—	—	1	8
		,, III	14	0	—	—	—	—	—	1	12
	platform, gun, R.M.L. 6·6-inch gyns		15	0	—	—	—	—	—	1	8
			18	0	—	—	—	—	—	2	0
	sling (with limber)	12 tons	13	8	—	—	—	—	—	2	4
		7 ,,	8	8	—	—	—	—	—	0	12
		6 ,,	15	0	—	—	—	—	—	2	0
	store, R.A. (with limber)		14	0	—	—	—	—	—	1	8
Wheels	1st class (5 feet)		1	14	—	—	—	—	—	0	3
	2nd ,, (5 feet)		1	8	—	—	—	—	—	0	2
	(4 ,,)		1	3	—	—	—	—	—	0	1
	(3 ,, 4 inches)		1	0	—	—	—	—	—	0	1
Vocabulary Section V. (2).											
Cases, powder, metal-lined, whole			—	—	—	5	0	—	—	0	8	Per 10 cases.
Spouting, shell (with trestles)			4	0	—	—	—	—	—	0	8	
Engines, 17·72-inch gun			—	—	12	0	—	—	—	—	—	
Tanks, for engine, 17·72-inch gun			—	—	10	0	—	—	—	—	—	

* 12 oz. of lamp-black paint in addition for trays.

Digitized by Google

TABLE K.—Time and Working Pay allowed for Scraping, Cleaning, and Painting the following Articles.

Description.	Scraping and Cleaning.		Painting.			
			Priming, or first Coat.		Stopping, and second Coat.	
	Time.	Amount.	Time.	Amount.	Time.	Amount.
	H. M.	s. d.	H. M.	s. d.	H. M.	s. d.
Vocabulary Section II (2).						
Drugs gun { 25 tons	8 0	0 8	7 0	0 10	9 0	1 1½
gun { 5 „	6 0	0 6	6 0	0 9	8 0	1 0
large						
medium	4 0	0 4	4 0	0 6	6 0	0 9
small	3 0	0 3	3 0	0 4½	4 0	0 6
Vocabulary Section II (3).						
Carts low, projectile	3 0	0 3	3 0	0 4½	4 0	0 6
shot	5 0	0 5	5 0	0 7½	8 0	1 0
sling	6 0	0 6	5 0	0 7½	8 0	1 0
trench	3 0	0 3	3 0	0 4½	4 0	0 6
Packsaddlery, Artillery, Cradles, R.M.L. { 7-pr. (200 and 150 lbs.)	0 15	0 0¼	0 30	0 0¾	0 30	0 0¾
{ 2·5-inch	0 20	0 0½	0 30	0 0¾	0 35	0 1
Vocabulary Section V (1).						
Apparatus, lifting guns, Hurst pattern	16 0	1 4	12 0	1 6	18 0	2 3
Axletrees, transporting (including the wheels) ... { bed, howitzer, R.M.L.						
slides, iron, R.M.L. { 11-inch (also 12-inch 25 tons)						
{ 10 „						
{ 9 „	1 30	0 1½	2 0	0 3	2 30	0 3¼
{ 7 „						
slides, medium, wood	1 0	0 1	1 30	0 2¼	2 0	0 3
Barrows ... { magazine { double	1 0	0 1	1 30	0 1½	2 0	0 3
{ single	1 0	0 1	1 0	0 1½	1 30	0 2¼
magazine lamps	...	...	2 0	0 3	2 0	0 3
powder	1 30	0 1½	1 30	0 2¼	2 0	0 3

Digitized by Google

| | | |

TABLE K.—*continued.*

Description.	Scraping and Cleaning.		Painting.			
			Priming, or first Coat.		Stopping, and second Coat.	
	Time.	Amount.	Time.	Amount.	Time.	Amount.
	H. M.	s. d.	H. M.	s. d.	H. M.	s. d.
Carriages, mountain, R.M.L. 7-pr. 200 lbs. (with limber)	5 0	0 5	5 0	0 7½	6 0	0 9
Carriages, mountain, R.M.L. 7-pr. 150 lbs.	3 0	0 3	3 0	0 4½	4 0	0 6
Carriages, mountain, R.M.L. 2·5-inch	3 0	0 3	3 0	0 4½	4 0	0 6
Carriages, parapet	1 0	0 1	1 30	0 2½	1 30	0 2½
Carriages, Q F. 3-pr. travelling	4 0	0 4	4 30	0 6¾	5 0	0 7½
Carriages, siege (with limber) B.L. 5-inch or 4 "	18 0	1 6	12 0	1 6	15 30	1 11¼
Carriages, siege (with limber) R.B.L. 40-pr. 6 ft. parapet	16 0	1 4	10 0	1 3	13 0	1 7½
Carriages, siege (with limber) R.B.L. 40-pr. wood	16 0	1 4	10 0	1 3	13 0	1 7½
Carriages, siege (with limber) R.M.L. 8-inch, 70 and 46 cwt., and 6·6-inch, howitzers	16 30	1 4½	10 0	1 3	13 0	1 7½
Carriages, siege (with limber) R.M.L. 6·6-inch gun	16 30	1 4½	10 0	1 3	13 0	1 7½
Carriages, siege (with limber) R.M.L. 6·3 " howitzer	16 0	1 4	10 0	1 3	13 0	1 7½
Carriages, siege (with limber) R.M.L. 64-pr. iron or wood and 40-pr.	16 0	1 4	10 0	1 3	13 0	1 7½
Carriages, siege (with limber) R.M.L. 40-pr. (including top carriages)	19 0	1 7	12 30	1 6¾	16 0	2 0
Carriages, siege (with limber) R.M.L. 25-pr.	18 0	1 6	11 30	1 5¼	15 0	1 10½
Carriages, siege (with limber) S.B. 32-pr., 24-pr. or 18-pr.	16 0	1 4	10 0	1 3	13 0	1 7½
Carriages, siege (with limber) mortar 10-inch	14 0	1 2	7 0	0 10½	10 0	1 3
Carriages, siege (with limber) mortar 8 "	13 0	1 1	6 0	0 9	9 0	1 1½
Carriages, siege (without limber), B.L. 4-inch	10 45	0 10¾	8 15	1 0⅜	10 15	1 3⅜
Carriages, siege (without limber), R.B.L. 40-pr., 6 ft. parapet	12 0	1 0	8 0	1 0	10 0	1 3
Carriages, transporting guns up inclines (12·5-inch)	10 0	0 10	7 0	0 10½	9 0	1 1½
Cases, cartridge* A and C	3 0	0 3	3 0	0 4½	3 0	0 4½
Cases, cartridge* Nos. 1, 2 and 3	3 0	0 3	3 0	0 4½	3 0	0 4½
Cases, cartridge* " 4, 5, 6 and 7	2 0	0 2	2 0	0 3	2 0	0 3
Crabs, hoisting guns 50 tons	10 0	0 10	6 0	0 9	8 0	1 0
Crabs, hoisting guns 25 "	8 0	0 8	4 0	0 6	6 0	0 9
Decks, mortar, 13-inch	5 0	0 5	5 0	0 7½	7 0	0 10½

Digitized by Google

Frames ...	cover, ordnance, large (16½ ft. × 8 ft.)	...	...	...	2	30	0	2½	2	0	0	3	2	15	0	3¼
	iron roller...	one-horse	...	...	7	0	0	7	5	0	0	7½	7	0	0	10½
		two ,,	...	...	8	30	0	8½	6	15	0	9½	8	30	1	0¾
	store. hydraulic jack, G.S.	...	...	...	1	30	0	1½	1	15	0	1¾	1	30	0	2¼
Garlands,	13-inch, 4 ft. 2½ in.	...	...	4 lengths	1	0	0	1	0	30		...	0	30	0	1½ †
	8 ,, 2 ,, 8 ,,	...	...	,,	0	30	0	0½	0	15		...	0	15	0	0¾ †
	rectangular 32-pr.	4 ,, 2 ,,	...	,,	1	0	0	1	0	30		...	0	30	0	1½
		3 ,, 8 ,,	...	,,	0	45	0	0¾	0	20		...	0	20	0	1 †
		2 ,, 1 ,,	...	,,	0	30	0	0½	0	15		...	0	15	0	0¾ †
	2¼ ,, 1 ,, 11 ,,	...	...	,,	0	20	0	0½	0	10		...	0	10	0	0¾ †
	12 ,, 1 ,, 6½ ,,	...	...	,,												
	triangular, 8-inch, 4 ft. 8¼ in.	...	...	3 lengths	1	30	0	1½	0	30		...	0	30	0	1½ †
Gear for landing heavy guns at sea forts	chain‡	...	...	...	160	0	13	4	...			...	...		...	
	remaining gear	...	...		64	0	5	4	64	0	8	0	64	0	8	0
Gear, loading, and apparatus washing out, 10·4-inch R.M.L.	...	...	...		9	0	0	9	6	0	0	9	8	0	1	0
Gyns, Gibraltar	...	...	...	...	4	0	0	4	3	0	0	4½	4	0	0	6
Gyns, triangle, with appurtenances	heavy	tubular	...	...	9	0	0	9	6	0	0	9	8	30	1	0¾
		wood	...	...												
	light	tubular	...	...	7	0	0	7	5	0	0	7½	7	0	0	10½
		wood	...	...												
	16 feet	...	...	...	6	0	0	6	4	30	0	6¾	6	0	0	9
Jacks, lifting	hydraulic, general service	30 tons	...	...	0	30	0	0½	0	30	0	0¾	0	30	0	0¾
		20 ,,	...	...	0	20	0	0½	0	20	0	0½	0	20	0	0½
		10 ,,	...	...	0	20	0	0½	0	20	0	0½	0	20	0	0½
	hydraulic, Tangye's	22½ tons	...	...	0	30	0	0½	0	20	0	0½	0	20	0	0½
		15 ,,	...	...	0	30	0	0½	0	30	0	0¾	0	30	0	0¾
		7½ ,,	...	...												
	screw, Clerk's	...	...	...												
Limbers, mountain, R.M.L. 7-pr. 200 lbs.	...	...	...		3	30	0	3½	3	30	0	5¼	4	0	0	6
Limbers, Q.F., 3-pr. travelling	...	...	...		5	0	0	5	5	30	0	8¼	6	0	0	9
Limbers, siege, R.B.L., 40-pr.	iron	...	...		6	0	0	6	4	0	0	6	5	30	0	8¼
	wood	...	...		6	0	0	6	4	0	0	6	5	30	0	8¼
Limbers, siege, transporting slide, R.B.L. 7-inch	...	...			5	0	0	5	5	0	0	7½	7	0	0	10½
Limbers, transporting	bed, howitzer, R.M.L.	...	...		6	30	0	6½	4	0	0	6	5	0	0	7½
	slide, L.	iron ...	...		5	0	0	5	5	0	0	7½	7	0	0	10½
		medium	...	...	3	0	0	3	3	0	0	4½	5	0	0	7½
Magazines, portable	...	...	...	...	1	30	0	1½	1	30	0	2¼	2	0	0	3
Mauls, common, *or* iron-hooped (for heads only per dozen, one coat)					...		...		1	45	0	2½	...		...	
Perches, wagon, ammunition R.B.L. 9-pr.	...	...	...	...	0	20	0	0½	0	15	0	0¾	0	20	0	0¾
Pivots, 10·4-inch, R.M.L.	...	...	...	...	2	0	0	2	1	30	0	2¼	1	30	0	2¼

* For 10 cases. † Working pay for two coats. ‡ The following are allowed for greasing:—Time 32 hours; amount *2s. 8d.*

Digitized by Google

TABLE K—*continued.*

Description.	Scraping and Cleaning.		Painting.			
			Priming or first Coat.		Stopping and second Coat.	
	Time.	Amount.	Time.	Amount.	Time.	Amount.
	H. M.	*s. d.*	H. M.	*s. d.*	H. M.	*s. d.*
Platforms ... ground for medium platform No. 15	4 0	0 4	4 0	0 6	6 0	0 9
ground R.M.L. howitzer beds	8 0	0 8	8 0	1 0	13 0	1 $7\frac{1}{2}$
ground R.M.L. howitzer beds	6 0	0 6	5 30	0 $8\frac{1}{4}$	8 0	1 0
siege, Clerk's	4 0	0 4	4 0	0 6	7 0	0 $10\frac{1}{2}$
Posts, picket ... 8 feet	0 15	0 $0\frac{1}{4}$	0 30	0 $0\frac{3}{4}$	0 30	0 $0\frac{3}{4}$
Posts, picket ... 6 ,, ...						
Posts, picket ... 5 ,, ...	0 10	0 $0\frac{1}{4}$	0 30	0 $0\frac{3}{4}$	0 30	0 $0\frac{3}{4}$
Scotches, recoil	0 30	0 $0\frac{1}{2}$	0 30	0 $0\frac{3}{4}$	0 40	0 1
Shafts ... ... (single)	0 15	0 $0\frac{1}{4}$	0 10	0 $0\frac{1}{4}$	0 15	0 $0\frac{3}{4}$
Shafts ... ... (framed)	0 30	0 $0\frac{1}{2}$	0 20	0 $0\frac{1}{2}$	0 30	0 $0\frac{1}{4}$
Skidding, iron (10 feet)	1 0	0 1	0 30	...	0 30	0 $1\frac{1}{2}$ †
Skidding, iron (4 ,,)	0 30	0 $0\frac{1}{2}$	0 15	...	0 15	0 $0\frac{3}{4}$ †
Sleighs, gun, 12 tons to 38 tons, *or* 12 tons to 25 tons	7 0	0 7	4 30	0 $6\frac{3}{4}$	6 0	0 9
Slides, L., medium ... ... No. 11						
,, 12						
,, 13						
,, 14						
,, 15	7 0	0 7	4 30	0 $6\frac{3}{4}$	6 0	0 9
,, 16						
,, 17						
,, 18						
,, 19						
Stages, loading	2 0	0 2	3 0	0 $4\frac{1}{2}$	4 0	0 6
Swingletrees	0 5	0 $0\frac{1}{2}$	0 5	0 $0\frac{3}{4}$	0 5	0 $0\frac{1}{2}$
Timber, spars for sheers, 70 ft. (2 to a set) ... ... set	10 0	0 10	13 0	1 $7\frac{1}{2}$	16 0	2 0
Trollies loading, R.M.L., 17·72-inch	3 30	0 $3\frac{1}{2}$	4 0	0 6	4 15	0 $6\frac{1}{4}$
Trollies shell ,, ,, ...	1 0	0 1	1 0	0 $1\frac{1}{2}$	1 0	0 $1\frac{1}{2}$

Digitized by Google

Trucks, ballast, 4 ft, 8½ in. gauge										14	30	1	2½	12	30	1	6¾	15 30	1	11¼
Turntables, R.M.L., 12·5-inch gun										120	0	10	0	60	0	7	6	60 0	7	6
Wagons	ammunition and store, R.A.									13	0	1	1	13	0	1	7⅞	17 0	2	1½
	B.L. 12-pr.									15	0	1	3	10	0	1	3	13 0	1	7½
	R.B.L.	40-pr.								16	30	1	4½	10	0	1	3	13 30	1	8¼
		20 ,,								16	0	1	4	9	30	1	2½	13 0	1	7½
		12 ,,																		
		9 ,,																		
		6 ,, service and special								11	0	0	11	6	0	0	9	8 0	1	0
	ammunition (with limber) R.M.L.	40-pr.								16	30	1	4½	10	0	1	3	13 30	1	8¼
		25 ,,																		
		16 ,,								16	0	1	4	9	30	1	2½	13 0	1	7½
		13 ,,								16	0	1	4	10	30	1	3¾	15 0	1	10½
		9 ,,								16	0	1	4	9	30	1	2½	13 0	1	7½
	S.B.	24-pr. howitzer																		
		12 ,, gun								16	0	1	4	9	30	1	2½	13 0	1	7½
		12 ,, howitzer																		
		9 ,,																		
		6 ,,								11	0	0	11	6	0	0	9	8 0	1	0
	Artillery									13	0	1	1	13	0	1	7½	17 0	2	1½
	forge, R.A. (with limber)	Mark I								13	0	1	1	10	30	1	3¾	15 0	1	10½
		,, II								16	0	1	4	13	30	1	8¼	18 0	2	3
		,, III								15	0	1	3	13	0	1	7½	17 0	2	1½
	platform	gun, R.M.L. 6·6-inch								15	0	1	3	8	0	1	0	10 0	1	3
		gyns								16	0	1	4	8	30	1	0¾	11 0	1	4½
	sling (with limber)	12 tons								12	0	1	0	10	0	1	3	14 0	1	9
		7 ,,								10	0	0	10	10	0	1	3	12 0	1	6
		6 ,,								10	0	0	10	8	0	1	0	12 0	1	6
	store, R.A. (with limber)									15	0	1	3	12	30	1	6¾	17 0	2	1½
Wheels	1st class (5 feet)									0	40	0	0 5/16	0	55	0	1 7/16	1 10	0	1 5/16
	2nd ,,	(5 feet)								0	40	0	0 5/16	0	50	0	1 1/4	1 0	0	1 1/4
		(4 ,,)								0	30	0	0½	0	45	0	1⅛	0 50	0	1 1/4
		(3 ,, 4 inches								0	25	0	0 7/16	0	40	0	1	0 45	0	1⅛
Vocabulary Section V. (2).																				
Cases, powder, metal-lined, whole (for 100 cases)										10	0	0	10	20	0	2	6	20 0	2	6
Spouting, shell (with trestles)										1	0	0	1	1	0	0	1½	1 0	0	1½
Engines, 17·72-inch gun										14	0	1	2	7	0	0	10½	7 0	0	10½
Tanks for engine, 17·72-inch gun										12	0	1	0	6	0	0	9	6 0	0	9

* When fixed in position.

† Working pay for two coats.

Digitized by Google

TABLE L.

The following Table shows the times allowed, and the working pay to be paid for scraping, cleaning, and painting all natures of Projectiles, and also the quantities of Paint required for painting 100 of each description of Projectile:—

Natures.		Unpiling, scraping, and cleaning in 10 hours.		Painting one coat, and piling in 10 hours.		Quantity of Paint per 100, one coat.
		No.	Amount per 100.	No.	Amount per 100.	
			s. d.		s. d.	lbs. ozs.
Vocabulary Section V (1).						
Shell and Shot, B.L.	16·25-inch	4	20 10	12	10 5	40 0
	13·5 ,, ...	6	13 10¾	14	8 10¼	33 0
	12 ,, ...	8	10 5	20	6 3	20 0
	10 ,, ...	10	8 4	25	5 9	16 0
	9·2 ,, ...	12	6 11½	30	4 2	11 0
	8 ,, ...	16	5 2½	40	3 1½	9 0
	6 ,, also 80-pr	30	2 9½	80	1 6¾	6 0
	5 ,, also 4·7-inch Q.F. ...	40	2 1	100	1 3	5 0
	4 ,, ...	50	1 8	125	1 0	4 0
	12-pr.	60	1 4¾	167	0 9	3 0
	common, Shrapnel, Palliser, and case — 17·72-inch ...	4	20 10	12	10 5	36 0
	common, Shrapnel, Palliser, and case — 16 ,, ...	4	20 10	12	10 5	36 0
	common, Shrapnel, Palliser, and case — 12·5 ,, ...	7	11 11	20	6 3	22 0
	common, Shrapnel and Palliser — 12-inch	8	10 5	24	5 2½	20 0
	common, Shrapnel and Palliser — 11 ,, ...	10	8 4	27	4 7½	15 0
	common, Shrapnel and Palliser — 10·4 ,, (also case)	12	6 11½	30	4 2	12 8
	common, Shrapnel and Palliser — 10 ,, ...					
	common, Shrapnel and Palliser — 9 ,, ...	15	5 6¾	40	3 1½	10 0
	common, Shrapnel and Palliser — 8 ,, ...	18	4 7½	50	2 6	9 0
	common, Shrapnel and Palliser — 7 ,, ...	25	3 4	70	1 9½	8 0
	common, Shrapnel and Palliser — 6·6 ,, (also case) ...	30	2 9½	80	1 6¾	6 0
Shell and Shot, R.M.L.	common, Shrapnel, and case — 6·3-inch (also 80-pr. and 64-pr.)	35	2 4¾	90	1 4¼	5 8
	common, Shrapnel, and case — 40-pr. (also R.B.L. case)	40	2 0	110	1 1¾	4 0
	common, Shrapnel, and case — 25-pr., 16-pr., and 4-in. howitzer (also R.B.L. case 20-pr.)	50	1 8	125	1 0	3 0
	common, Shrapnel, and case — 15-pr., 13-pr., 9·pr., and 7-pr. (also R.B.L. case 12-pr. and 9-pr.)	60	1 4¾	150	0 10	2 0
	common, Shrapnel, and case — 2·5-inch (also R.B.L. case 6-pr.)	80	1 0½	160	0 9½	1 8
	double ... 7-inch	20	4 2	60	2 1	9 0
	double ... 7-pr.	40	2 1	125	1 0	2 8
	case ... 12-inch	15	5 6¾	40	3 1½	10 0
	case ... 11 ,, ...	17	4 11	50	2 6	7 8
	case ... 10 ,, ...	20	4 2	60	2 1	6 4
	case ... 9 ,, ...	25	3 4	75	1 8	5 0
	case ... 8 ,, ...	27	3 1	80	1 6¾	4 8
	case ... 7 ,, ...	30	2 9½	90	1 4¼	4 0

Digitized by Google

TABLE L.—*continued.*

Natures.	Unpiling, scraping, and cleaning in 10 hours.		Painting one coat, and piling in 10 hours.		Quantity of Paint per 100, one coat.
	No.	Amount per 100.	No.	Amount per 100.	
		s. d.		s. d.	lbs. ozs.
Shells, R.B.L., common, segment, and Shrapnel 7-inch	60	1 $4\frac{3}{4}$	150	0 10	3 0‡
40-pr.	80	1 $0\frac{1}{2}$	200	0 7	2 $8\frac{1}{4}$‡
20 ,, ...	100	0 10	250	0 6	2 0‡
12 ,, ...	120	0 $8\frac{1}{2}$	250	0 6	2 0‡
9 ,, ...					
6 ,, ...	150	0 $6\frac{3}{4}$	300	0 5	1 $8\frac{1}{4}$‡
Shot, S.B.B.L., case, 32-pr.	30	2 $9\frac{1}{2}$	80	1 $6\frac{3}{4}$	5 8
Shells, B.L. common (steel) ... 13·5-inch	Painting white rings.		75	1 8	2 0
12 ,, ...			100	1 3	1 12
10 ,, ...					
9·2 ,, ...			125	1 0	1 8
8 ,, ...					
6 ,, ...			150	0 10	1 4
5 ,, ...			200	0 $7\frac{1}{2}$	1 0
4 ,, ...					
Shells, R.M.L., common (steel) ... 4-inch howitzer ...	Painting white rings.		200	0 $7\frac{1}{2}$	1 0
15-pr.			250	0 6	0 12
Shells, R.B.L., common, and segment 7-inch	Painting red rings.		125	1 0	2 0
40-pr.			200	0 $7\frac{1}{2}$	1 4
20 ,, ...					
12 ,, ...					
9 ,, ...			250	0 6	1 0
6 ,, ...					
Shells, R.M.L., common, and Shrapnel ... ... 17·72-inch ...			75	1 8	3 8
16 ,, ...					
12·5 ,, ...					
12 ,, ...					
11 ,, ...			100	1 3	2 10
10·4 ,, ...					
10 ,, ...					
9 ,, ...					
8 ,, ...			125	1 0	2 0
7 ,, ...					
6·6 ,, ...					
6·3-inch			150	0 10	1 8
80-pr.					
64 ,, ...					
40-pr.			200	0 $7\frac{1}{2}$	1 4
25 ,, ...					
16-pr. to 2·5-inch ...			250	0 6	1 0
Shells, B.L., Shrapnel (steel)... ... 13·5-inch...	Painting white rings and red tips.		75	1 8	2 0* / 5 0†
12 ,, ...			100	1 3	1 12* / 3 8†
10 ,, ...					
9·2 ,, ...			125	1 0	1 8* / 2 8†
8 ,, ...					

* White. † Red.

‡ For segment the paint will be half black and half white.

Digitized by Google

TABLE L.—*continued.*

Natures.	Unpiling, scraping, and cleaning in 10 hours.		Painting one coat, and piling in 10 hours.		Quantity of Paint per 100 one coat.
	No.	Amount per 100.	No.	Amount per 100.	
				s. d.	lbs. ozs.
Shells, B.L., Shrapnel (steel) ... 6-inch	Painting white rings and red tips.		150	0 10	1 4* / 1 12†
5 ,, ...			200	0 $7\frac{1}{2}$	1 0* / 1 8†
4 ,, ...					1 0* / 1 8†
Shells, R.M.L., common (steel) ... 4-inch howitzer ...			200	0 $7\frac{1}{2}$	
15-pr.			250	0 6	0 12* / 1 4†
13·5-inch	Painting red tips.		75	1 8	5 0
12 ,, ...			100	1 3	3 8
Shells, B.L., Shrapnel (cast iron) ... 10 ,, ...					
9·2 ,, ...			125	1 0	2 8
8 ,, ...					
6 ,, ...			150	0 10	1 12
5 ,, ...			200	0 $7\frac{1}{2}$	1 8
4 ,, ...					
17·72-inch			75	1 8	5 0
16 ,, ...					
12·5 ,, ...					
12 ,, ...			100	1 3	3 8
11 ,, ...					
10·4 ,, ...					
Shells, R.M.L., Shrapnel ... ... 10 ,, ...					
9 ,, ...			125	1 0	2 8
8 ,, ...					
7 ,, ...					
6·6-inch, 6·3-inch, and 64-prs. 80			150	0 10	1 12
40 and 25 prs.			200	0 $7\frac{1}{2}$	1 8
16 ,, to 2·5-inch ...			250	0 6	1 4
16·25-inch	Painting yellow rings.		12	10 5	1 8
13·5 ,, ...			14	8 $11\frac{1}{2}$	1 8
12 ,, ...			16	7 $9\frac{3}{4}$	1 8
10 ,, ...			45	2 $9\frac{1}{2}$	1 8
Shells, B.L., common, Palliser, and Shrapnel ... 9·2 ,, ...			60	2 1	1 4
8 ,, ...			60	2 1	1 4
80-pr.			90	1 $4\frac{3}{4}$	0 12
6-inch			90	1 $4\frac{1}{4}$	0 12
5 ,, ...			220	0 7	0 12
4 ,, ...			260	0 6	0 8
12-pr.			290	0 $5\frac{1}{4}$	0 8
17·72-inch			10	12 6	1 8
16 ,, ...			12	10 5	1 8
Shells, R.M.L., common, Palliser, and Shrapnel ... 12·5 ,, ...			14	8 11	1 8
12 ,, 35 tons ...			16	7 $9\frac{3}{4}$	1 8
12 ,, 25 ,, ...			16	7 $9\frac{3}{4}$	1 8
11 ,, ...			30	4 2	1 8
10 ,, ...			45	2 $9\frac{1}{4}$	1 8

* White. † Red.

Digitized by Google

TABLE L.—*continued.*

Natures.		Unpiling, scraping, and cleaning in 10 hours.		Painting one coat, and piling in 10 hours.		Quantity of Paint per 100, one coat
		No.	Amount per 100.	No.	Amount per 100.	
					s. d.	lbs. ozs.
Shells, R.M.L., common, Palliser, and Shrapnel ...	9-inch	Painting yellow rings.		60	2 1	1 4
	8 ,, ...			70	1 9½	1 4
	7 ,, ...			90	1 4½	1 4
	6·6 ,, ...			90	1 4½	0 12
	80-pr.			160	0 9¼	0 12
	64 ,, ...			200	0 7½	0 12
	6·3-inch			200	0 7½	0 12
	40-pr.			225	0 6¾	0 12
	25 ,, ...			250	0 6	0 8
	16 ,, ...			270	0 5½	0 8
	13 ,, ...			290	0 5¼	0 8
	9 ,, ...			300	0 5	0 8
	7 ,, ...			300	0 5	0 8
	2·5-inch			300	0 5	0 8
Shells, R.M.L., double	7-inch			90	1 4¾	1 4
	7-pr.			300	0 5	0 8

Digitized by Google

LIST OF APPENDICES.

PAGE.

I. Lists of Stores for Mounting, Dismounting and Moving Guns.... 653

II. Arrangement of Stores in Works 670

III. Range Finders.... 672

IV. List of Works in which a Red Flag will be Hoisted while Practice is going on 688

V. List of Stations and Number of Sets of Stores per Station allowed for Laboratory Instruction of Royal Artillery.... 691

VI. Materials allowed for Packing Hydraulic Buffers 692

VII. Traversing Racks and Graduated Arcs 693

VIII. Table of Service Racers and Pivot Plugs 694

IX. Tools for Venting and Repairing R.M.L. and S.B. Ordnance 700

X. Chests, Tool, Filled 707

Digitized by Google

APPENDIX I.

LISTS OF STORES FOR MOUNTING, DISMOUNTING AND MOVING, &c., GUNS OF 18 TO 100 TONS.

Referred to in paragraph 90, *Part* 2.

CONTENTS.

NO. OF LIST.	SUBJECT.		PAGE.
1.	Transporting by Trolley on Rails	18 to 47 tons.	654
2.	Transporting by Special Carriage on Rails up Incline		654
3.	Transporting by Sleigh		655
4.	Transporting by Parbuckling		656
5.	Mounting and Dismounting in Open Battery or "C" Emplacement		657
6.	Mounting and Dismounting by Box Beam (suspended from wooden Frame)		659
7.	Mounting and Dismounting in Casemates		660
8.	Mounting and Dismounting by Box Beam (suspended from Roof of Casemate)		661
9.	Mounting and Dismounting in Low-roofed Casemates		662
10.	Embarking, Disembarking, &c., by Heavy Sheers		663
11.	Gear for Landing Heavy Ordnance at Iron-clad Forts		665
12.	Mounting and Dismounting by Yeatman Tackle, 18 to 25 tons		666
13.	Mounting and Dismounting on Small Port Carriages, 38 tons		667
14.	Gear for Landing Carriages, Slides, &c., at Sea Forts		668
15.	Gear for Landing, Transporting, &c., 17·72-inch R.M.L. Guns, 100 tons		668
	Distribution List of Stores and Gear		669

Digitized by Google

Transporting by Trolley on Rails—18 to 47 tons.

LIST No. 1.

Name of Store.	No. required.	For what purpose.	Remarks.
Vocabulary Section II (2).			
Trucks, railway, gun	1	General purposes...	According to weight of gun.
Vocabulary Section IV.			
Grease, Field's* (in pot) lbs.	2		
Vocabulary Section V (1).			
Handspikes, common, 7 ft. ...	6		
Planks, moving guns, half, 6 ft. × 12 in.	6		
Ropes, parbuckling, 18 fms., 6-in.	2	General purposes.	
Scotches, large	20		
Skids { 6 ft. × 12 in. square ...	1		
Skids { 3 ft. × 9 in. × 6 in. ...	1		

* Price's composite grease will be used in place of Field's grease at all foreign stations other than British North America.

N.B.—One winch or crab capstan and a tackle may be required if on an incline.

Transporting by Special Wrought Iron Carriage on Rails up Incline—18 to 47 tons.

LIST No. 2.

Name of Store.	No. required.	For what purpose.	Remarks.
Vocabulary Section IV.			
Blocks, snatch, iron	6	2 for main chains 2 at crabs half-way 2 at top of incline	Special for 1-in. chain.
Chain, iron, cable, 1 in.	4	For main chains ...	12½ fm. lengths.
Cordage, hawser, 3-strand, tarred, 9-inch ... ... coils	2	For brake-check rope.	
Vocabulary Section V. (1).			
Carriages, wrought iron, transporting	1	For carrying guns	Special.
Crabs, hoisting guns { 50 tons ...	4	For hauling, viz., 2 half-way, and 2 at top of incline	
Crabs, hoisting guns { 25 ,, ...	4	For hauling in slack of chain.	
Frames, crab, hoisting guns ... ... { 50 tons ...	4	Use with crabs.	
Frames, crab, hoisting guns ... ... { 25 ,, ...	4	Use with crabs.	
Holdfasts			
Lashings, tarred, 2½-in. *and* 1½-in.	...	For general purposes.	As required.
Mauls, iron-hooped			
Posts, picket, 8 feet			

Digitized by Google

Transporting by Sleigh—18 to 47 tons.

LIST No. 3.

Name of Store.	No. required.	For what purpose.	Remarks.
Vocabulary Section II. (1).			
Drivers, pile, Swiss	2		
Vocabulary Section IV.			
Blocks, wood — Both-way — single, 18-inch	2	Check rope and motive power.	
Both-way — double, 18-inch	2		
Both-way — treble, 18-inch	2		
snatch, 18-inch ...	2		
Cordage — hawser, 3 strand, white, 6-inch (coils of 113 fathoms)	2		
Cordage — tarred, spun yarn, hemp, 3-thread lbs.	4		
Vocabulary Section V (1).			
Capstans, crab	2	For level.	
Crabs, hoisting guns, 50 tons, *or* 25 tons	2	For inclines ...	As required.
Frames, crab, hoisting guns, 50 tons, *or* 25 tons	2	Use with crabs.	
Gyns, triangle — heavy — Slings, gun, 16ft.	1	Attached to gun.	
Gyns, triangle — heavy — Thimbles, sling, 16 ft.	1		
Gyns, triangle — 16 feet, Slings	4	Standing end of tackles, &c.	
Handspikes, common, 7 ft. ...	12		
Jacks, lifting, hydraulic, Tangye's, 7½ tons, 15 tons, *or* 22½ tons*	2	... ...	As required.
Lashings, tarred, 2½-inch, 5 fms.	12		
Levers, 14 feet	2		
Mauls, iron-hooped	6		
Planks, moving guns.† — half, 4 ft. × 12 in. ...	6		
Planks, moving guns.† — whole, 10 ft. × 17 in — fir	15	For roadway.	
Planks, moving guns.† — whole, 10 ft. × 17 in — oak	4	For roadway.	
Posts, picket — 8 feet	9	Holdfasts for level.	On an incline, sunken holdfasts may be necessary.
Posts, picket — 5 ,, ...	12	Holdfasts for level.	On an incline, sunken holdfasts may be necessary.
Rollers, ground — 7 ft. × 12 in. diameter...	4	For travelling.	
Rollers, ground — 6 ft. × 10 in. ,, ‡ ...	6	For placing sleigh under gun.	
Rollers, ground — 2 ft. × 8 in. ,, sabicu	4	For shifting sleigh.	
Ropes, drag, heavy	6		
Scotches — large	20		
Scotches — large, handled ...	6	For following up incline.	
Selvagees, ordinary	6		

* These jacks will be replaced by G.S. jacks of 10 tons, 20 tons, and 30 tons respectively as the present stock becomes used up. The 30 ton jack should be used with guns over 45 tons.

† The estimate for planks and skids is merely approximate, it must vary with the nature of the operation.

‡ The 6-ft. × 10-in. rollers are only required when the gangway is too narrow to use the longer rollers, or for transporting carriages and slides.

Digitized by Google

LIST No. 3—*continued.*

Name of Store.	No. required.	For what purpose.	Remarks.
Skids* 6 ft. × 12 in. square ...	6	Roadway and general purposes.	
4 ft. × 12 in. „ ...	6		
5 ft. × 6 in. × 5 in.... ...	2		
3 ft. × 9 in. × 6 in.... ...	6		
3 ft. × 6 in. × 5 in.... ...	6		
3 ft. × 6 in. × 3 in.... ...	6		
Sleighs, gun, 12 tons to 45 tons...	1	Roadway and general purposes.	
Wedges, oak, 18-inch	6	For passing from one skid to another when not exactly of same level.	18 in. × 12 in. × 2½ in.

* The estimate for planks and skids is merely approximate, it must vary with the nature of the operation.

Transporting by Parbuckling—18 to 47 tons.

IST No. 4.

Name of Store.	No. required.	For what purpose.	Remarks.
Vocabulary Section II (1).			
Drivers, pile, Swiss	2		
Vocabulary Section IV.			
Blocks, wood Both-way... double, 12-in.	1	For cutting muzzle.	
Both-way... single, 12 „	1		
snatch 18-in. ...	2		
snatch 12-in. ...	2		
Cordage, hawser, 3-strand, tarred, 4-inch... ... ... fms.	56½	For cutting muzzle.	
Grease, Field's* (in pot) ... lbs.	2		
Vocabulary Section V (1).			
Buckets, sponge, garrison ...	1		
Capstans, crab	2		
Gyns, triangle, heavy, Slings, gun, 3-feet	1	For cutting muzzle.	
Handspikes, common, 7-feet ...	8		
Jacks, lifting, hydraulic, Tangye's, 7½ tons, 15 tons, *or* 22½ tons†	1	... ...	As required.
Lashings, tarred, 2½-inch, 5 fms.	10		
Levers, 14-feet	3		
Mauls, iron-hooped...	6		

* Price's composite grease will be used in place of Field's grease at all foreign stations other than British North America.

† These jacks will be replaced by G.S. jacks of 10 tons, 20 tons, and 30 tons, respectively, as the present stock becomes used up. The 30 ton jack should be used with guns over 45 tons.

Digitized by Google

LIST No. 4—*continued.*

Name of Store.	No. required.	For what purpose.	Remarks.
Planks, moving guns ... half... 6 ft. × 12 in.	3	Roadway, &c.	
4 ,, × 12 ,,	2		
whole 10 ,, × 17 ,, fir	8		
10 ft. × 12 in.	4		
Plates, moving guns	2	For placing over skids to ease moving forward the muzzle.	3 ft. × 7 in. × ¾ in.
Posts, picket ... 8-feet	9	Holdfasts.	
5 ,, ...	12		
Rollers, ground, 8 ft. × 12 in. diameter	1	For cutting muzzle.	For 38-ton guns only.
Ropes drag, heavy	6		
parbuckling, 18 fms. 6-in.	2		
Scotches, large	8		
Selvagees, ordinary	6		
Skids† 20 ft. × 15 in. square ...	4*	Roadway and general purposes.	6 for guns of 25 tons and upward.
6 ,, × 12 ,, ,, ...	2		
4 ,, × 12 ,, ,, ...	2		
3 ,, × 9 ,, × 6 in. ...	6		
3 ,, × 6 ,, × 5 ,, ...	6		
3 ,, × 6 ,, × 3 ,, ...	6		
Slings, rope, 6-inch, 12 feet long	2	Making fast crab capstan to pickets.	
Wedges, oak, 18-inch	2	For passing from one skid to another when not exactly on equal level.	18 in. × 12 in. × 2½ in.

* The list of skidding is merely an approximation, and must vary with every operation.

Mounting and Dismounting in Open Battery or "C" Emplacement—18 to 47 tons.

LIST No. 5.

Name of Store.	No. required.	For what purpose.	Remarks.
Vocabulary Section V (1).			
Gyns, triangle, with appurtenances, heavy, tubular*	1	Lifting breech.	
Gyns, heavy, Slings, gun, 3 ft.	1	Round cascable.	
triangle 16 ft., Slings	2	General purposes.	
Jacks, lifting, hydraulic, Tangye's, 7½-tons, 15 tons, *or* 22½ tons†	1	... ...	As required.

* The power of the gyn having been raised to 15 tons, the tackle for guns over 35 tons should consist of two 18-inch blocks and 20 fms. of 6-inch white rope.

† These jacks will be replaced by G.S. jacks of 10 tons, 20 tons, and 30 tons respectively, as the present stock becomes used up. The 30 ton jack should be used with guns over 45 tons.

Digitized by Google

LIST No. 5—*continued.*

Name of Store.	No. required.	For what purpose.	Remarks.
Planks, half moving guns { 6 ft. × 12 in. ...	4	To move guns and slide, &c.	
4 ft. × 12 in. ...	8		
whole, 10 ft. × 17 in., oak	2		
Rollers, ground, 3 ft. × 5 in. diameter, sabicu	6	To move slide.	
Ropes, drag, heavy...	6		
Scotches { large	16		
medium...	16		
small	16		
Selvagees, ordinary	6		
Shackles, lifting, 38-ton guns ...	1	To lift the breech with a gyn.	For 35 and 38-ton guns.
Skids* { 14 ft. × 8 in. square ...	2		
6 ft. × 12 in. ,, ...	12		
4 ft. × 12 in. ,, ...	4		
3 ft. × 9 in. × 6 in. ...	4		
3 ft. × 6 in. × 5 in. ...	2		
3 ft. × 6 in. × 3 in. ...	4		
dismounting { 11½ ft. × 15 in. × 20 in.	1		35 to 47-ton guns.
11½ ft. × 10 in. × 20 in.	1	Under chase	11-in. or 12-in. 25-ton guns.
10 ft. × 9 in. × 15 in.	1		10-in. guns.
rope, 12 in., 4 ft. 4 in. long	1	Round cascable ...	Guns of 25 tons.
Slings { 6-in., 5 ft. long	1		
5 ,, 5 ,, ...	1	General purposes.	
4 ,, 5 ,, ...	1		
Tackles, luff, 14 fathoms ...	2		

* The list of skidding is merely an approximation, and must vary with every operation.

Digitized by Google

Mounting and Dismounting by Box-Beam in Casemates where the Height of the Crown of the Arch is above 12 feet. (As at Hurst Castle.)* 18 to 47 tons.

LIST No. 6.

Name of Store.	No. required.	For what purpose.	Remarks.
Vocabulary Section IV.			
Cordage, bawser, 3-strand, tarred, 4½ inch ... ... fms.	6	To support rear of carriage, with 2 luff tackles.	
Vocabulary Section V (1).			
Apparatus, lifting guns — Blocks	20	To support the hydraulic jacks.	16 of 2 ft. × 10 in. × 10 in., 2 of 3 ft. 6 in. × 16 in. × 10 in., and 2 (fitted to base plates) of 1 ft. 10½ in. × 16 in. × 9¼ in.
Hurst pattern — Bolts, bent ...	2	To suspend gun to box-beam.	3 ft. × 2 in.
Hurst pattern — Boxes, beam ...	1		
Hurst pattern — Frames	1	To suspend box-beam.	
Hurst pattern — Plates, washer	2	Connect bent bolts and main screws.	18 in. × 7 in. × 1½ in.
Hurst pattern — Screws, main ...	2	To connect beam to frame.	5 ft. × 3 in.
Stands, hydraulic jack ...		To steady the jacks.	2 ft. × 2 ft. × 1 ft. 8½ in.
Tommies, bottom nut ...	2	For bottom nut of main screw.	
Handspikes, common, 7 feet ...	6		
Jacks, lifting, hydraulic, Tangye's, 22½ tons†	2		
Levers — 14 feet	2		
Levers — 12 ,, ...	2		
Levers — 8 ,, ...	1		
Planks, moving guns — half, 6 ft. × 12 in.	4		
Planks, moving guns — whole, 10 ft. × 12 in.	4		
Ropes, drag, heavy...	6		
Scotches — large	6		
Scotches — medium	6		
Scotches — small	6		
Selvagees, ordinary	6		
Skids — 6 ft. × 12 in. square ...	8		
Skids — 4 ,, × 12 ,, ,, ...	8		
Skids — 3 ,, × 9 ,, × 6 in. ...	12		
Tackles — gun, 3-inch white rope	2	For lifting front of carriage.	
Tackles — luff, 14 fathoms ...	2	To support rear of carriage.	

* The Box-Beam is not required when the gun can be hung up in the port on built-up skidding in front of the slide, the upper part of the chase bearing against the top of the port.

† These jacks will be replaced by G.S. jacks of 30 tons as the present stock becomes used up. The 30 ton jack should be used with guns of over 45 tons.

Digitized by Google

Mounting and Dismounting in Casemates—18 to 47 tons.

LIST No. 7.

Name of Store.	No. required.	For what purpose.	Remarks.
Vocabulary Section IV.			
Chain, iron, crane { $\frac{5}{8}$-in. ... ... fms.	1	Short sling...	For beam.
{ $\frac{1}{2}$-in. ... ... ,,	1	Lashing beam to cascable....	
Vocabulary Section V (1).			
Gyns, triangle, 16 feet, Slings ...	2		
Jacks, lifting, hydraulic, Tangye's, 7½ tons, 15 tons, *or* 22½ tons* (with "Apparatus, lifting guns, Stand, hydraulic jack")	2	... ...	As required.
Levers, 14 feet	2		
Planks, moving guns, half { 6 ft. × 12 in. ...	6		
{ 4 ,, × 12 ,, ...	4		
Ropes, drag, heavy	6		
Selvagees, ordinary	6		
Skids { 6 ft. × 12 in. square	22		
{ 4 ,, × 12 ,, ,, ...	16		
{ 3 ,, × 9 ,, × 6 in.	4		
{ 3 ,, × 6 ,, × 5 ,, ...	2		
{ 3 ,, × 6 ,, × 3 ,, ...	4		
{ dismounting { 11½ ft. × 15 in. × 20 in.	1	... ...	35 to 47-ton guns.
{ dismounting { 11½ ,, × 10 ,, × 20 ,,	2	... ...	11-in. or 12-in. 25-ton guns.
{ dismounting { 10 ,, × 9 ,, × 15 ,,	2	... ...	10-in. guns.
Tackles, gun, 3-in. white rope ...	2		

N.B.—When the breech is lowered by means of tackle, the following additiona boxes will be required:—

Vocabulary Section V. (1).			
Crabs, iron, hoisting guns, 50 tons *or* 25 tons	1	To lift breech ...	According to weight of gun.
Frames, crab, hoisting guns, 50 tons, *or* 25 tons	1	Use with crab.	
Gaskets, crab, 6-in.	1	To stopper fall ...	For 6-in. fall.
Gyns, triangle, heavy, Tackles ...	1	To lift breech.	
Lashings, tarred, 2½-in. 5 fathoms	2	To secure crab.	

* These jacks will be replaced by G.S. jacks of 10 tons, 20 tons, and 30 tons respectively, as the present stock becomes used up. The 30 ton jack should be used with guns over 45 tons.

Digitized by Google

Mounting and Dismounting by Box-Beam Suspended from Roof of Casemate. (As at Spitbank Fort.)—18 to 47 tons.

LIST No. 8.

Name of Store.	No. required.	For what purpose.	Remarks.
Vocabulary Section IV.			
Cordage, hawser, 3-strand, tarred, 4½ inch ... ... fms.	6	To support rear of carriage, with 2 luff tackles.	Or one 4½ in. parbuckling rope.
Vocabulary Section V (1).			
Apparatus, lifting guns — Hurst pattern — Bolts, bent ...	2	To suspend gun to box-beam	3 ft. × 2 in.
Boxes, beam ...	1		
Plates, washer	2	Connect bent bolts and main screws	18 in. × 7 in. × 1½ in.
Screws, main	2	To connect beam to roof of casemates.	5 ft. × 3 in.
Stands, hydraulic jack ...	2	To steady the jack.	2 ft. × 2 ft. × 1 ft. 8½ in.
Tommies, bottom nut ...	2	For bottom nut of main screw.	
Handspikes, common, 7 feet ...	6		
Jacks, lifting, hydraulic, Tangye's, 22½ tons*	2		
Levers — 14 feet	2		
12 ,, ...	2		
8 ,, ...	1		
Planks, moving guns — half, 6 ft. × 12 in. ...	4		
whole, 10 ft. × 12 in. ...	4		
Ropes, drag, heavy...	6		
Scotches — large	6		
medium	6		
small	6		
Selvagees, ordinary	6		
Skids — 6 ft. × 12 in. square ...	8		
4 ft. × 12 in. ,, ...	8		
3 ft. × 9 in. × 6 in. ...	12		
Tackles — gun, 3 in. white rope	2	For lifting front of carriage.	
luff, 14 fathoms ...	2		

* These jacks will be replaced by G.S. jacks of 30 tons as the present stock becomes used up. The 30 ton jack should be used with guns over 45 tons.

N.B.—Short lengths of ½-inch chain (about 4 fathoms each) will be found useful when hoisting the carriage by tackle made fast to the box-beam.

Only 38-ton guns are fitted with studs to the trunnions, for the loop of the box-beam

Digitized by Google

Mounting and Dismounting Heavy Ordnance in Low-RoofedCasemates less than 9 feet 6 inches in height. (As at Sliema Point Battery, Malta; and Seaforth Battery, Mersey Defences.)—18 to 47 tons.

LIST No. 9.

Name of Store.	No. required.	For what purpose.	Remarks.
Vocabulary Section V (1).			
Apparatus, lifting guns, Sliema pattern: Bolts, bent, cascable ...	1	To fit round cascable.	3 ft. × 2 in.
Bolts, bent, trunnion...	2	To fit round trunnion.	2 ft. 9 in. × 2 in.
Pins, top nut ...	3	For top nut of main screws.	
Plates, washer, cascable ...	1	Connect bent bolts and main screws.	22 in. × 9 in. × 4½ in
Plates, washer, trunnion...	2	Connect bent bolts and main screws.	18 ,, × 9¼ ,, × 4 ,,
Plates, supporting washer plates, cascable	2	... ...	21 in. long.
Plates, supporting washer plates, trunnion	4	... ...	22½ ,, ,,
Screws, main, cascable	1	Connects the washer plates.	2 ft. 5¾ in. × 3 in.
Screws, main, trunnion	2	Connects the washer plates.	2 ft. 5¾ in. × 3 in.
Stands, hydraulic jack ...	2	For steadying the jack.	2 ft. × 2 ft. × 1 ft. 8½ in.
Tommies, bottom nut... ...	3	For bottom nut of main screws.	
Jacks, lifting, hydraulic, Tangye's, 22½ tons*	2		

* These jacks will be replaced by G.S. jacks of 30 tons as the present stock becomes used up. The 30 ton jack should be used with guns over 45 tons.

N.B.—For bringing the gun into position, *see* Lists 3 and 4, as required.

Digitized by Google

Embarking and Disembarking, &c., by Heavy Sheers. 18 to 47 tons.

LIST NO. 10.

Name of Store.	For raising guns of 35 to 47 tons.	For raising guns of 18 to 25 tons.	Remarks.
Vocabulary Section II. (1).			
Drivers, pile, Swiss	3	3	
Vocabulary Section III.			
Axes, pick { Heads, 6½ lbs.	4	4	
Axes, pick { Helves, 34½ inches ...	4	4	
Shovels, universal	6	6	
Vocabulary Section IV.			
Blocks, wood — Bothway, treble — 21-inch ...	8	—	4 for main tackles, 4 for guys.*
Blocks, wood — Bothway, treble — 18 ,, ...	—	8	4 for main tackles, 4 for guy tackles.
Blocks, wood — snatch ... — 21 ,, ...	4	—	For altering lead of main tackle and guy runner falls.
Blocks, wood — snatch ... — 18 ,, ...	2	4	For derrick and altering lead.
Blocks, wood — snatch ... — 18 ,, ...	—	2	For main tackle at foot of sheers.
Blocks, wood — snatch ... — 15 ,, ...	—	2	Back guy of derrick.
Cordage, tarred, 2½-inch ... fms.	—	60	12 lashings of 5 fms. each.
Cordage, tarred, *or* white, 1½-in. ,,	80	80	For anti-twisters.
Cordage, hawser, 3 strand — 7-inch ... ,,	452	—	2 coils for main tackles.
	56	—	2 ,, ,, guys.* With 47-ton guns for messenger to reinforce crabs.
Cordage, hawser, 3 strand — 6 ,, ... ,,	—	452	2 coils for main tackles.
	113	—	2 ,, ,, guys.*
Cordage, hawser, 3 strand — 4½ ,, ... ,,	—	113	Back guy of derrick.
	24	—	2 lashings of 12 fms. for lashing lower blocks of main tackles to spars.
Cordage, white — 4 ,, ... ,,	—	35†	Head lashing.
	169	169	Side guys of derrick.
Cordage, white — 3 ,, ... ,,	—	24	2 lashings for snatch blocks at foot of sheers.
	—	6	Lashing leading blocks to foot of derrick.
Cordage, white — 2½ ,, ... ,,	80	—	8 lashings of 10 fms., lashing blocks on derrick.
	—	9	Head lashing of derrick.
	—	8	2 pieces of 4 fms. each, for lashing blocks of tackles to derricks.
Cordage, tarred, spun yarn, hemp, 3-thread lbs.	6	5	
Grease, Field's‡ ... ... ,,	6	6	

* If rigged with two back guys provision must be made accordingly.

† Not required for sheers which have the head fitted with iron bolt, wire guys, and hook and chain, for attaching main tackles.

‡ Price's composite grease will be used in place of Field's grease at all foreign stations other than British North America.

Digitized by Google

LIST No. 10—*continued.*

Name of Store.	For raising guns of: 35 to 47 tons.	For raising guns of: 18 to 25 tons.	Remarks.
Timber, spars for sheers and derricks ... — 20-inch (60 feet) ...	—	2	Sheer legs.
— 15 ,, (50 ,,) ...	1	—	For derricks.
— 10 ,, (40 ,,) ...	—	1	
— 10 ,, (30 ,,) ...	1	—	For securing across feet of sheers when moving them to the front.
Vocabulary Section V (1).			
Capstans, crab	2	2	For hauling forward feet of sheers when raised or assisting crabs.
Chains, sheers, heavy, 70 feet (12½ fms. long) — 1½-inch, 38-ton guns	2	—	For holdfasts for standing blocks of guys.
— 1½ ,, 25 ,, ,,	—	2	For holdfasts.
— 1 ,, ...	2	—	For leading blocks at holdfasts.
— 1 ,, ...	—	2	For holdfasts.
— ¾ ,, ...	4	—	For holdfasts, as required.
Crabs, hoisting guns* — 50 tons	4	4	2 for main tackles, 2 ,, guys ... — 25- to 47-ton guns.
— 25 ,, ...	—	4	2 for main tackles, 2 ,, guys ... — 18-ton guns.
Frames, crab, hoisting guns — 50 tons	4	4	Use with crabs.
— 25 ,,	—	4	
Gaskets, crab	4	4	
Guys, heavy — 7-inch (lengths of 30 ft.)	8	—	
sheers† — 5½ ,, ,,	—	6	
— Slings, gun — 16 feet ...	—	4‡	2 for guy straps, 2 for main tackles.
— Slings, gun — 3 ,, ...	—	2	For cascable and chase when lifting 25-ton guns.
Gyns, triangle — heavy — Tackles	4	—	For foot tackles and moving feet of sheers.
— heavy — Thimbles, sling, 16 feet	—	4	
— 16-feet — Tackles	2	—	For foot tackles of derricks.
— 16-feet — Tackles	—	2	For foot tackles of sheers.
— 16-feet — Slings	2	—	For securing capstans.
— 16-feet — Slings	—	3	2 for foot tackles and 1 for head of derricks.
Lashings, tarred, 2½-in., 5 fms. ...	12	12	Lashing pickets, &c.
Mauls, iron-hooped	12	12	For driving pickets.
Planks, moving guns, whole, 10 ft. × 17 in. — fir	20	8	For placing under coils of rope and for holdfasts.
— oak	12	6	For placing under shoes or feet of sheers.
Posts, picket — 8-feet	32	12	For holdfasts.
— 5 ,, ...	20	12	
—	—	12	Holdfasts for foot tackles of derrick.
Ropes, drag, heavy	16	16	General purposes.

* With 45 and 47-ton guns 2 extra crabs, iron, hoisting guns, 25 tons, will be required with messengers to reinforce the main fall crabs.

† If steel wire guys are supplied the sizes will be less.

‡ Not required for sheers which have the head fitted with iron bolt, wire guys, and hook and chain, for attaching main tackles.

Digitized by Google

LIST NO. 10—*continued.*

Name of Store.	For raising guns of		Remarks.
	35 to 47 tons.	18 to 25 tons.	
Rollers, ground, 6 ft. × 10 in. diameter,	8	—	For moving spars and crab winches.
Selvagees, ordinary	24	24	General purposes.
Shackles { lifting 38-ton guns ...	1	—	For lifting the breech with 35 and 38-ton guns.
Shackles { sheer, heavy	—	4	Capable of taking 18-in. blocks at holdfasts.
Sheers, 70 feet, without tackle set	1	—	Fitted with head bolt and chains. For main tackles.
Shoes, sheer { 4 ft. 6 in. × 3 ft. 6 in. ...	2	2	For feet of sheers.
Shoes, sheer { 3 ft. 6 in. × 2 ft. 6 in. ...	1	1	For foot of derrick.
Skids* { 14 ft. × 12 in. square, oak ...	2	2	For heavy holdfasts.
Skids* { 6 ft. × 12 in. square	20	12	Skidding spars, &c.
Slings { rope, 12-inch, 4 ft. 4 in. long	1	—	For lifting chase.
Slings { rope, 12-inch, 4 ft. 4 in. long	—	2	For cascable and chase when lifting 25-ton guns.
Slings { 6-inch, 5 ft. long	—	1	For use in erecting sheers.
Slings { 5 ,, ,, ,, ...	—	1	
Slings { 4 ,, ,, ,, ...	—	1	
Tackles { gun, 3-in., white rope ...	—	2	For foot tackles of derrick.
Tackles { luff, 14 fathoms	4	4	Runners for derrick guys, &c.
Thimbles, sheer, 9-in. rope	—	4	For use with guy straps (9-inch) and main tackles.†

* The estimate for skidding is merely approximate and must vary with the nature of the operation.

† Not required for sheers which have the head fitted with iron bolt, wire guys, and hook and chain for attaching main tackles.

N.B.—The stores required for the holdfasts must in a great measure depend on local circumstances.

Should it be required to heel sheers, when raising 18 to 47-ton guns, at an angle greater than 15° from the perpendicular, they should be rigged with two guys on the side which has to take the weight at extreme heel.

This detail only makes provision for one back and one fore guy, and if two are required demands should be framed accordingly.

Gear for Landing Heavy Ordnance at Iron-clad Forts. (As at Spithead and Plymouth Breakwater.)—18 to 47 tons.

LIST NO. 11.

This gear is special, and supplied where required.

No other stores will be required, except for removing the guns when landed, for which see List No. 3.

Digitized by Google

Mounting and Dismounting Guns up to 25 tons, in Casemates 12 feet and under, when Yeatman Tackle is used—18 to 25 tons.

LIST No. 12.

Name of Store.	No. required.	For what purpose.	Remarks.
Vocabulary Section IV.			
Blocks, wood, Bothway, single, 12-inch	1	Runner tackle, for breech.	
Cordage, hawser, 3-strand, white: 6-inch (15 fms.)	1	Breech tackle	For falls of tackles.
4 ,, (12 fms. 2 to a set)	1 set	Muzzle tackle	
4 ,, (56 fms.)	1	Runner ...	
Vocabulary Section V (1).			
Blocks, tackle, mounting guns in casemates: 18-inch cascable ...	1	Breech.	
18-inch crown ...	1		
12 ,, with special shackle	2	Muzzle ...	2 for muzzle straps.
12 ,, with special shackle to swivel	2		2 for crown of arch.
Crabs, iron, hoisting guns, 25 tons	3	2 for muzzle tackle 1 for breech tackle	
Frames, crab, hoisting guns, 25 tons	3	Use with crabs.	
Gaskets, crab	3	Stoppering falls	1 for 6-inch fall.
			2 for 4 ,, ,,
Jacks, lifting, hydraulic, Tangye's, 15 tons*	1		
Lashings, tarred, $2\frac{1}{2}$-inch, 5 fathoms	6	Securing crabs.	
Shackles, sling, mounting guns in casemate to 25 tons (2 to a set)	1 set		
Skids, 3 ft. × 9 in. × 6 in. ...	6		
Slings, rope, wire, 3-inch	1	For chase	3 ft. 5 in.

* These jacks will be replaced by G.S. jacks of 20 tons, as the present stock becomes used up.

N.B.—Holdfasts will probably be required to secure the breech crab; the ring bolts in casemates will probably be sufficient for muzzle crab.

Digitized by Google

Gear for Mounting and Dismounting 38-ton Guns on Small Port Carriages.

(As at Plymouth Breakwater Fort, and Fort Cunningham, Bermuda.)

LIST No. 13.

Name of Store.	No. required.	For what purpose.	Remarks.
Vocabulary Section V. (1).			
Apparatus, lifting guns — small port pattern — Bars, suspending — upper	1	For suspending long screw bolts	4 ft. 10 in. × 9 in. × 5 in.
Apparatus, lifting guns — small port pattern — Bars, suspending — lower	1	For suspending the bent bolt that passes round cascable	2 ft. 8 in. × 8 in. × 5 in.
Apparatus, lifting guns — small port pattern — Blocks	1	For fitting inside the bent bolt on top of cascable	1 ft. 4 in. × 11 in. × 5 in.
Apparatus, lifting guns — small port pattern — Bolts, bent — upper bar	1	For connecting top bar to rear loop bolt in roof of casemate	1 ft. 4½ in. × 2 in.
Apparatus, lifting guns — small port pattern — Bolts, bent — cascable	1	To fit round the cascable	2 ft. 5 in. × 2 in.
Apparatus, lifting guns — small port pattern — Bolts, connecting bars	2	For connecting upper and lower bars	5 ft. 3 in. × 2 in.
Apparatus, lifting guns — small port pattern — Pads	1	To ensure a better bearing between the roof bolt and the bent bolt	3 1/16 in. × 3 1/16 in. × ¾ in. average
Apparatus, lifting guns — Stands, hydraulic, jack	2	For steadying the hydraulic jacks	2 ft. × 2 ft. × 1 ft. 8½ in.
Tommies	2	For screwing up nuts.	
Jacks, lifting, hydraulic, Tangye's, 22½ tons*	2		

* These jacks will be replaced by G.S. jacks of 30 tons as the present stock becomes used up.

Digitized by Google

Gear for Landing Carriages, Slides, &c., at Sea Forts.

List No. 14.

This gear is special, and supplied where required.

The only stores required with it are one or two sets of heavy tackle, 18 inch blocks, 6 inch fall.

Gear for Landing, Transporting, Mounting, and Dismounting 17·72-inch R.M.L. Guns.

List No. 15.

This gear is special, and supplied to Gibraltar and Malta; details are furnished in 17·72-inch R.M.L. gun handbook. Before being sent to the Mediterranean it was used for the 16-inch R.M.L. guns at the Admiralty Pier, Dover.

Digitized by Google

Distribution List of Special Gear and Stores for Landing, Transporting, Mounting, and Dismounting Guns of 18 to 100 Tons.

District.	Sub-District or Work.	No. of List as laid down at pages														Remarks.
		1	2	3	4	5	6	7	8	9	10	11	12	13	14	15	
Home.																	
Thames	General use	...	...	1	...	...	...	...	...	...	...	...	...	...	...	...	
	Sheerness	...	...	...	1	...	...	1	...	...	...	...	...	...	...	...	
	Thames	...	...	...	1	...	1	...	...	...	...	...	1	...	...	...	
	Isle of Grain	...	...	...	...	1	...	...	...	...	...	...	...	...	...	...	
Cork	General use	...	...	1	1	1	...	1	...	...	...	...	1	...	...	...	
Dublin	General use	...	...	1	...	1	...	...	...	...	1	...	...	...	...	...	
Eastern	Landguard Ft.	...	...	1	...	...	...	...	1	...	...	...	1	...	...	...	
N. Britain	Firth of Forth Batteries	...	...	...	1	1	...	...	...	...	...	...	...	...	...	...	
S. Eastern	Dover	...	...	...	1	1	...	...	...	...	...	...	...	...	...	...	
	Newhaven	...	...	...	1	1	...	...	...	...	...	...	...	...	...	...	
Southern	General use	...	...	1	...	...	...	...	...	...	...	...	...	...	...	...	
	Portsmouth	...	...	...	1	1	...	1	...	...	...	...	...	...	...	...	
	Spithead	...	...	...	1		...		1	...	...	...	...	1	3	...	Spitbank, No Man's Land, and Horse Sand.
	Needles	...	...	...	1	...	1	1	...	...	...	1a	...	...	...	...	
	Isle of Wight	...	...	...					...	...	...	...	...	...	...	...	
	Portland	...	...	...	1	1	...	...	1	...	...	...	1	...	1	...	
Western	General use	...	...	1	...	...	...	...	...	...	...	...	...	...	...	...	
	Plymouth	...	...	...	1	1	...	1	...	...	...	...	...	1	1	...	
	Pembroke	...	...	...	1	...	...	...	...	...	...	...	1	...	...	...	
Woolwich Arsenal	... ...	2*	1	...	...	...	1	...	...	...	4†	...	...	...	...	...	For general use, and will be demanded on loan as required.
Foreign.																	
Bermuda	General use	...	...	1	1	1	...	...	...	...	...	...	...	...	...	...	
	Fort Cunningham	...	...	...	...	...	...	...	...	...	...	...	...	1	...	...	
C. of G. H.	Table Bay	1	...	1	...	1	...	...	...	1	...	...	...	...	...	...	
Ceylon	Colombo	...	1	...	...	...	...	...	1	...	...	...	...	...	...	...	
	Trincomalie	...	...	...	...	...	...	...	1	...	...	...	...	...	...	...	
Halifax, N.S.	General use	...	...	1	1	...	...	1	...	...	...	1	...	...	...	...	
	York Redoubt	...	...	...	...	1	...	...	...	...	...	...	...	...	...	...	
Hong Kong	... ...	...	...	1	1	1	...	...	...	...	...	1	...	...	...	...	
Gibraltar	General use	...	...	1	1	1	1	1	1	...	...	...	1	...	...	§	
Jamaica	... ...	...	...	...	...	1	...	...	...	...	...	1	...	...	...	...	
Malta	General use	...	1	1‡	1	1	1	1	...	...	...	...	1	...	...	§	
	Sliema Fort	...	...	...	...	...	...	...	...	1	...	...	...	...	...	...	
Mauritius	... ...	...	...	1	...	1	...	...	...	...	...	1	...	...	...	...	
Sierra Leone	... ...	...	...	1	...	1	...	...	...	1	...	...	...	...	...	...	
Straits Settlements	Singapore	...	...	1	1	1	...	...	...	...	...	...	...	...	...	...	
St. Helena	... ...	...	...	...	...	1	...	...	...	1	...	...	...	...	...	...	
St. Lucia	... ...	...	...	1	1	...	...	...	...	1	...	...	...	...	...	...	

* One set is composed of two short trucks, made for use at Seaforth.

† A number of spars in addition are in store. One set of these sheers is fitted with special head and feet gear, tackle, chain, guys, and 25-ton crabs.

‡ Two sleighs. § Special supplies have been made to Gibraltar and Malta.

a Common to Ironclad forts at No Man's Land, Horse Sand, Spitbank, and Portland and Plymouth Breakwaters.

Digitized by Google

APPENDIX II.

ARRANGEMENT OF STORES IN WORKS.

Referred to in paragraph 60, *Part* 2.

Grouping of stores.

1. The various articles allowed for the equipment of a work should be stored with reference to the ordnance for which they are required, rather than by nature of the article or convenience of storage; they should therefore be separately grouped according to the ordnance and batteries to which they belong.

Spare articles.

2. Spare articles, which are provided in certain proportions for an aggregate number of pieces, should be collected together by class or nature in those artillery store rooms designated "General," for the convenience of charge and inspection.

Stores for each piece to be kept separate.

3. In every Artillery Store other than "General," a separate place should be assigned to the separate collection of articles necessary to the equipment of each piece, and each such place should be so plainly marked with the number, nature, and position of the piece to which the articles belong, that they may be immediately distinguished and taken up by men not previously familiar with the Store. If the fuzes and tubes are kept in the Artillery Store, they will also be dealt with as above.

Case shot.

4. Case shot should be, as far as practicable, near their respective pieces. Where there is room, a few rounds (say 5) should be stored in the shell recesses in addition to the filled shells, but if this is inconvenient, or if no recesses exist, some case shot must be stored as near to the ordnance as circumstances will admit, and not all for one work collected in the same place

Palliser shot fitted with gas checks.

5. In works where sufficient shell store accommodation is available, 25 per cent. of the Palliser shot (studded) will have the gas checks attached and stored therein. Where no sufficient accommodation exists, 10 per cent. will be so fitted, and stored as near to the gun as circumstances will permit.

Digitized by Google

Wood bottoms

6. Wood bottoms for spherical shells, with the rivets and implements for fixing them, should be kept in the lobby of the laboratory. Where this cannot be done, they must be kept near the place where it is proposed to fix them. The place where they are kept should be dry.

Empty shells.

7. Empty shells should, as a rule, be piled near the place for filling them, and where covered space is available it should be utilized as far as possible. All those for one fort need not necessarily be on the same spot, but they should be contiguous to the place where the operation would be performed. Under no circumstances should shells be piled at the rear of the slides.

Gas checks.

8. Gas checks, when not fitted to projectiles, will be kept packed in the cases in which they are issued from store.

Wedge wads.

9. Wedge wads, where required, should be kept in due proportions in the same place as the filled shells, unless the place is damp, in which case they should be as near as may be found practicable.

Implements.

10. All implements connected with making up cartridges should be kept in the cartridge filling room, and all those connected with filling shells should be kept in the shell filling room. In forts where there is no laboratory, these implements should be kept by sets a one end, or part, of the Artillery General Store.

Keys and wrenches.

11. General service keys for fuze hole plugs should be kept in the shell stores for the guns to which they belong, and two per laboratory where shells are filled should be kept in the shell filling room. The wrench for removing base plugs should also be kept in the shell filling room.

Fuzes and tubes with each piece.

12. The number of fuzes and tubes to be kept with each piece will be found in the details.

Tubes at stations abroad.

13. At stations abroad cylinders of tubes will be kept packed in the metal-lined cases in which they are issued from the Ordnance Store Department.

Storage of fuzes and tubes.

14. In works where the specified accommodation for fuzes and tubes is provided, these stores will be placed there, but when no such accommodation exists, the store most convenient for, and adjacent to, each piece, must be selected for the purpose. It is most important that the store be a dry one.

Digitized by Google

APPENDIX III.

RANGE-FINDERS.

DEPRESSION RANGE-FINDERS.

(*Referred to in paragraph* 87, *Part* 2, *Section XI.*)

LIST of Coast Batteries having an elevation of 30 feet, and upwards, above high-water mark, for which Depression Range-Finders are allowed.

District and Work.	Description of Instrument.						Remarks.
	Mark I.	Mark IA.	Mark IB.	Mark IC.	Mark ID.	Special.	
CORK.							
Fort Camden—							
Right Upper Battery	1	..	..	..	..	..	
,, Lower Battery	..	1	..	..	..	..	
Left Upper Battery	1	..	..	..	..	..	
Fort Carlisle—							
Rupert's Tower Battery	..	..	1	..	..	..	
No. 1 Battery	..	1	..	..	..	..	
,, 2 ,, ...	1	..	..	..	..	..	
,, 4 ,, ...	2	..	..	..	..	..	
Fort Westmoreland	3	..	..	..	..	..	1 for C.O. Station.
Instruction	1	..	..	..	..	..	

Digitized by Google

THAMES.							
Coalhouse Fort						1	
Shornmead Fort				1			
Cliffe Fort				1			
Coalhouse Battery				2			
Tilbury Fort				1			
Barton's Point Battery				2			
Sheerness Lines				2			
New Tavern Fort		1					Specially graduated.
Garrison Point Fort				2			
Grain Fort		1					Specially graduated.
Grain Wing Battery				1			
Slough Fort		1					
Darnet Fort				1			
Instruction		1					
NORTH-WESTERN.							
Seaforth Battery			1				
NORTH BRITAIN.							
Inchkeith—							
No. 1 Battery	1						
" 2 "	1						
" 3 "		1					
Kinghornness		1					
EASTERN.							
Shotley Point Battery		2					
Landguard Fort			1				
Instruction			1				
SOUTH-EASTERN.							
East Demi-Bastion				1			

Digitized by Google

District and Work.	Description of Instrument.						Remarks.
	Mark I.	Mark Ia.	Mark Ib.	Mark Ic.	Mark Id.	Special.	
Shotyard Battery	..	..	..	1	..	..	
Shoulder-of-Mutton Battery	1	..	1	..	..	..	
St. Martin's Battery	..	..	..	1	..	..	
South Lines	2	..	..	..	..	..	
Archcliffe Fort	..	2	..	..	..	..	
Newhaven	2	..	..	..	..	..	
Pier Turret	..	..	..	..	1	..	
Hospital Battery*	..	..	..	1	..	..	*Observing Station for O.C.R.A.
Instruction	1	..	..	..	..	..	
SOUTHERN.							
Southsea Castle	..	..	..	..	3	..	
Lumps Fort	..	..	..	..	1	..	
Eastney Batteries	..	..	..	..	2	..	
Fort Cumberland	..	..	..	..	1	..	
Browndown Battery	..	..	..	..	1	..	
Fort Gilkicker	..	..	..	..	2	..	
Horse Sand Fort	..	..	..	..	2	..	
No Man's Land Fort	..	..	..	..	2	..	
Spitbank Fort	..	..	..	..	2	..	
St. Helen's Fort	..	..	..	..	1	..	
Isle of Wight—							
Needles Battery	..	..	..	1	..	1	
Hatherwood	..	..	..	1	..	..	
Warden Point	2	..	..	..	..	..	

Digitized by Google

| | | |

District and Work.	Description of Instrument.						Remarks.
	Mark I.	Mark Ia.	Mark Ib.	Mark Ic.	Mark Id.	Special.	
Pembroke—							
Chapel Bay Battery	..	..	1	..	..	..	
Stack Rock	..	3	..	..	..	..	
South Hook Battery	..	2	..	..	..	..	
Popton Point	..	2	..	..	..	..	
Hubberstone	..	2	..	..	..	..	
St. Catherine's Fort	1	..	..	..	..	..	
Instruction	1	..	..	..	..	..	
BERMUDA.							
Fort Cunningham	2	..	..	..	..	..	
Alexandra Battery	..	..	..	..	1	..	
Fort Albert	..	..	1	..	..	..	
„ Catherine	..	..	..	..	1	..	
„ Victoria	..	..	1	..	..	..	
„ George	1	..	..	..	..	..	
Whale Bay Battery	..	..	1	..	..	..	
Ireland Island	..	..	..	..	1	..	
Prospect Hill—							
Fort Langton	1	..	..	..	..	..	
Instruction	1	..	..	..	..	..	
HALIFAX, N.S.							
Fort George	..	..	..	1	..	..	
„ Clarence	..	1	..	..	..	..	

Digitized by Google

| | | |

District and Work.	Description of Instrument.						Remarks.
	Mark I.	Mark Ia.	Mark Ib.	Mark Ic.	Mark Id.	Special.	
Sliema—							
St. Anthony's Bastion	..	1	..	..	..	..	
Cambridge Battery	1	..	..	..	..	..	
Sliema Point Fort	..	..	..	..	2	..	
Fort Tigné	..	2	..	..	..	..	
Garden Battery	..	..	..	..	1	..	
Pembroke—							
Pembroke Fort	1	..	..	..	..	..	
Madalena Fort	..	..	..	2	..	..	
Floriana—							
Crucifix Bastion	..	1	..	..	..	..	
Ricasoli—							
Fort Ricasoli — No. 2 Bastion	..	1	..	..	..	..	
Fort Ricasoli — „ 3 „	..	1	..	..	..	..	
Fort Ricasoli — „ 5 Curtain	..	1	..	..	..	..	
Fort Ricasoli — „ 4 Bastion, Left Ravelin	1	..	..	..	..	..	
Rinella Battery	1	..	..	..	..	..	
San Leonardo—							
San Rocco Fort	1	..	..	..	..	..	
San Leonardo	..	..	2	..	..	..	
Della Grazia	2	..	..	..	..	..	
Delimara—							
Delimara Fort	2	..	..	..	..	..	
St. Lucien Fort	1	..	..	..	..	..	

Digitized by Google

| | | |

District and Work.	Description of Instrument.						Remarks.
	Mark I.	Mark Ia.	Mark Ib.	Mark Ic.	Mark Id.	Special.	
Ceylon.							
Colombo—							
Battenburg Battery	..	..	..	..	1	..	
Exkhuysen..	..	..	..	..	1	..	
Klippenburg and Guard Batteries	..	..	..	..	1	..	
Mutwall Point	..	1	..	..	1	..	
Galle Face	..	..	..	..	1	..	
Trincomalie—							
Regent's Battery	1	..	..	..	..	..	
Ridge Battery	..	..	1	..	..	..	
Great Sober Island — Arthur Battery	1	..	..	..	..	..	
Fort Frederick—							
Flagstaff Battery	..	..	1	..	..	..	
Eastern	1	..	..	..	..	..	
Portugese Bastion and Ostenburg	1	..	..	..	..	..	
Cavalier and Citadel	1	..	..	..	..	..	
West Battery	..	1	..	..	..	..	
Cape of Good Hope.							
Table Bay—							
Amsterdam Battery	..	..	..	..	1	..	
Fort Knokke	..	..	..	..	1	..	
Wynyard Battery	..	2	..	..	..	..	
Lion Battery	..	..	..	1	..	..	

Digitized by Google

| | | |

District and Work.	Description of Instrument.						Remarks.
	Mark I.	Mark Ia.	Mark Ib.	Mark Ic.	Mark Id.	Special.	
STRAITS SETTLEMENTS.							
Fort Connaught	1	..	3	..	..	..	
Mount Siloso	..	..	2	..	..	..	
Passir Panjang	..	1	2	..	..	..	
Mount Palmer	..	..	2	..	..	..	
" Serapong	..	..	..	2	..	..	
Tanjong Katong	..	..	..	..	1	..	
Tereget Point.. ..	..	1	..	..	..	..	
ST. LUCIA.							
Vigie	..	..	3	..	..	..	
Toc Bay	..	..	2	..	..	..	
Morne	..	..	..	..	..	2	
SHOEBURYNESS	1	1	..	..	1	..	

Digitized by Google

INSTRUCTIONS FOR THE CARE AND PRESERVATION OF RANGE-FINDERS.

1. Depression.

1. Depression range-finders, of the following descriptions, are allowed for Coast batteries (armed with heavy guns) :—

Mark I.	for batteries	85 to 190 feet.
Mark Ia.	,,	60 to 110 feet.
Mark Ib.	,,	110 to 240 feet.
Mark Ic.	,,	240 to 590 feet.
Mark Id.	,,	25 to 50 feet.

Instruments specially graduated are allowed in exceptional positions.

2. The instruments will be taken on charge by the Officer Commanding Royal Artillery of the District, who will be held responsible for their condition.

3. The depression range-finders will be periodically inspected by the Chief Inspector of Position Finding, or an officer deputed by him, whenever such inspection is recommended by the Instructor in Depression Range-finders at the various stations.

4. The instruments found defective will be sent to Woolwich for repair on the recommendation of the local Instructors in the Depression Range-finder. They will be forwarded through the Senior Ordnance Store Officer of the District to the Commissary-General of Ordnance, Woolwich, who will transmit them to the Chief Inspector of Position Finding; they will be returned through the same channel.

5. A history sheet in duplicate will be prepared for each range-finder, and every transaction connected with the instrument will be entered on these sheets (*see* specimen page). One copy will accompany the instrument to which it relates on all occasions of inspection or return to store, the other will be retained by the Inspector of Position-finding.

6. When instruments in Ordnance Store charge require examination, the Inspector of Position-finding is to be communicated with as to time and place of inspection.

7. When an instrument is sent to the Commissary-General of Ordnance for repair or inspection, a report of the condition of the instruments will be sent with it, thus—

Digitized by Google

(*a.*) Condition of No. instrument.
(*b.*) Is the instrument in good order and does it give correct ranges ?
(*c.*) If not, explain reason.

8. If the instrument has been damaged, full particulars of how the damage occurred should be stated.

9. To pack the instrument for transport—
(*a.*) Remove the telescope and place it in the special box in which it was sent to the station.
(*b.*) Push the slide to the end of the bar furthest from the pivots.
(*c.*) Screw up the drum to the zero position.
(*d.*) Tie several turns of tape round the telescope arm and the body of the instrument so as to keep these parts from moving.

10. The boxes containing the instrument and telescope should be packed in a strong box with hay, and marked "Glass, with care." The lid being screwed down, not nailed.

11. The range-finder, when not in use, should be kept in a dry place.

12. Instruments when taken out for instruction or practice should be in the immediate charge of a qualified Officer or non-commissioned officer, and before passing out of his charge should be carefully inspected.

13. On no account should an unqualified man attempt to set up or use the range-finder.

14. The steel parts of the instrument and the large screws should be occasionally oiled, but the oil must be wiped off again; an accumulation of oil is liable to cause particles of grit to adhere and damage the working parts.

15. The object glass and eye piece should be occasionally slightly cleaned with a *perfectly clean* soft piece of chamois leather, which should be used for no other purpose.

16. It is not advisable, unless absolutely necessary, to remove the object glass or eye piece.

17. Should it be necessary to remove the object glass, it must be carefully screwed up into exactly the same position, and the instrument tested for collineation again.

18. If the eye piece is removed, great care should be taken that the fine spider's web which will be then exposed is not damaged.

Digitized by Google

19. Care should be exercised in ascertaining that the distance of the datum points are correct, and it is very desirable that one of these points should be near the extreme right, the other the left training.

20. Should the instrument when set on one datum point, not give the correct distance of the other datum point, the instrument should be examined to see if it is properly levelled, and in adjustment. If these are correct, the distance of the datum points should be verified from a map, or application be made to the Royal Engineers to measure the distances.

21. When it is considered advisable to use the instrument on permanent work, base plate and covers should be demanded through the War Office.

22. These, which are somewhat similar to the head of the range-finder tripod, are secured with cement on the work. One adjusting screw of the range-finder is painted black, and should always be placed in the black hole of the base plate when setting the instrument up.

23. Instruments once levelled on to a base plate, if carefully taken off when returning to box, will require no adjustment when again set up for use.

24. Covers with padlock will be provided for use with the base plate to protect them from the weather.

25. On no account should any attempt be made to repair the instruments locally. Should new cross-wires be required the Instructor in the Depression Range-finder should be applied to.

2. Watkin, Field.

Watkin Field Range-finders, large, Class I, for service, and Class II for instruction, are issued to Movable Armaments, as approved from time to time. The equipment will be the same as that given in the Vocabulary of Stores, with the exception of the picket buckets.

The instruments and equipment will be in charge of the Officer Commanding Royal Artillery at the place of issue, who will be responsible that the Class I instruments are not made use of by uninstructed non-commissioned officers, and that the general rules for their care and preservation contained in the "Manual of Field Range-finding" are attended to.

Demands will be put forward, as a rule, every two years for the exchange of the range-finding equipment, for the purpose of being inspected by the Instructor in Range-finding.

Digitized by Google

HISTORY SHEET FOR

Depression Range-finder. Mark Ia.

Inspected 20. 1. 88, by _____

Issues and Exchanges.					
Date.	From	To	For	Date.	Occasion.
5. 1. 87	C.G.O.	C.R.A., Western District.	Service	...	...
20. 11. 87	C.R.A., Western District.	C.G.O.	Inspection ...	4. 12. 87	Annual ...
10. 12. 87	C.G.O.	C.R.A., Western District.	Service	...	...
8. 6. 88	C.R.A., Western District.	C.G.O.	Repair of cross wires.	20. 6. 88	After repairs
&c.	&c.	&c.	&c.	&c.	&c.
10. 1. 90	C.R.A., Western District.	C.G.O.	Repair, blown down, placed too near gun.	30. 1, 90	Inspection..

Digitized by Google

Army Form, G. 849.

DEPRESSION RANGE-FINDER.

Number 217. *Manufacturer*, Smith & Co.

_____, Inspector of Position-finding.

Inspections.		Repairs.		Signature of Officer making the entry.
Remarks of Inspecting Officer.	Recommendation.	Date.	By.	
... ...	...	...	...	
Good order	Service	...	...	H. W
... ...	...	...	...	
Good order	Service	12.6	Smith ...	
&c.	&c.	...	...	
Damaged beyond repair ...	Struck off charge.	Authority	84 W	

Digitized by Google

APPENDIX IV.

List of Works in which a Red Flag will be hoisted while practice is being carried on.

(*Referred to in Paragraph* 100).

District or Station.	Work.	No.
Home.		
Thames District....	Grain Fort	1
	Sheerness Lines	1
Cork District	Camden Fort	1
	Carlisle Fort	1
	Charles Fort	1
	Duncannon Fort	1
	Tarbert Fort	1
	Westmoreland Fort	1
Dublin District	Kingstown	1
Eastern District	Beacon Cliff Practice Battery	1
	Landguard Practice Battery	1
	North Battery, Great Yarmouth	1
	South Battery, ,, ...	1
North British District	Inchkeith	1
	Kinghornness ,....	1
North-Eastern District	Berwick-on-Tweed	1
	Paull Point Battery	1
	Scarborough Castle	1
	Sunderland (Abb's Point Battery)	1
	Tynemouth Castle....	1
North - Western District	Perch Rock Battery	1
	Seaforth Battery	1
South - Eastern District	Archcliffe Fort and South Lines Battery.	1
	Dymchurch Redoubt	1
	Eastbourne Redoubt	1
	Newhaven Fort	1
	Practice Battery, Dover Castle	1
	Shoreham Redoubt	1

Digitized by Google

List of Works, &c.—*continued.*

District or Station.	Work.	No.
Southern District	East Weir Batteries	1
	Freshwater Redoubt	1
	Gilkicker Battery	1
	Lumps Fort	1
	Nothe Fort	1
	Puckpool Battery	1
	Sandown Fort	1
	Southsea Castle	1
	Spitbank Fort	1
	Warden Point Battery	1
Western District	Bovisand Practice Battery	1
	Pater Battery	1
	South Hook Fort	1
	Breandown Battery	1
	Flatholme Battery	1
	Sheepholme Battery	1
Foreign.		
Barbados	Charles Fort	1
Bermuda	Albert Fort	1
	Catherine Fort	
	Alexandra Battery	1
	Cunningham Fort	
	Dockyard Batteries	1
	Whale Bay Battery	
	Ferry Tower	
	George Fort	1
	Victoria Fort	
Cape of Good Hope	Cemetery Battery	
	North Battery	2
	South Battery	
	Imhoff Battery	
	Knokke Fort	2
	Wynyard Fort	
Ceylon	Colombo	1
	Trincomalie	1

Digitized by Google

District or Station.	Work.	No.
China	Belcher's Point Battery	1
	Stone Cutter's Island	1
Malta	Abercrombie's Bastion	1
	English Curtain	1
	No. 1 Bastion, Fort Ricasoli	1
	„ 2 Battery, Fort St. Angelo	1
	Tower, Fort Tigne	1
Mauritius	George Fort	1
Nova Scotia	Cambridge Fort	1
	Charlotte Fort	1
	Clarence Fort	1
	Ives Point Battery	1
	York Redoubt	1
St. Helena	High Knoll Battery	1
	Ladder Hill Battery	1
	Munden's Point Battery	1
St. Lucia	Toc Bay Battery	1
Singapore	Fort Connaught	1
	„ Palmer	1
	„ Passir Panjang	1
	„ Serapong	1
	„ Siloso	1
	„ Tanjong Katong	1
	„ Teregeh	1

Digitized by Google

APPENDIX V.

List of Stations and No. of Sets of Stores per Station allowed for Laboratory Instruction of Royal Artillery.

(*Referred to in paragraph* 110, *Part* 2.)

District or Station.	No. of Sets.
Home.	
Aldershot	3
Channel Islands	1
Eastern District	2
Ireland	1
Royal Military Repository, Woolwich	1
School of Gunnery, Shoeburyness	2
Thames District (Sheerness)	2
South-Eastern District	7
Southern District....	6
Western District	
Abroad.	
Barbados	1
Bermuda	2
Cape	1
Ceylon	1
Gibraltar	2
Halifax	1
Hong Kong	1
Jamaica	1
Malta	2
Mauritius	1
Singapore	1
Sierra Leone	1
St. Helena....	1

Digitized by Google

APPENDIX VI.

MATERIALS ALLOWED FOR PACKING HYDRAULIC BUFFERS.

(*See paragraph* 457.)

Articles.	Ordinary Buffers.		Tension Buffers.	
	First Supply for each Buffer.	Annual Supply for five Buffers.	First Supply for each Buffer.	Annual Supply for five Buffers.
Vocabulary Section IV.				
Flax, dressed ... ... oz.	1	2	...	...
Oil, linseed, boiled ... ... pts.	$\frac{1}{8}$	$\frac{1}{4}$	$\frac{1}{8}$	$\frac{1}{4}$
Paint, lead { red, dry... ... ... ozs.	...	...	4	8
Paint, lead { white, ground ... ,,	...	...	4	
Rope, cotton, white, 2-inch... ... ,,	2	4	$4\frac{1}{2}$	9
Tallow, Russian ... ... ,,	$1\frac{1}{2}$	3	$1\frac{1}{2}$	3
Miscellaneous Stores.				
Cement, Scott's ... ... lbs.	$\frac{1}{4}$	$\frac{1}{2}$	...	...
Leathers { cap	...	...	1	5
Leathers { piston rod	...	...	1	5

Digitized by Google

APPENDIX VII.

TRAVERSING RACKS AND GRADUATED ARCS.

Referred to in paragraph 98, Part 2.

TABLE OF CAST-IRON TRAVERSING RACKS.

	Nature of Slide.	Radii. A.*	Radii. C.	Radii. D.	Remarks.
		ft. in.	ft. in.	ft. in.	
B.L.	12-inch	14 5	—	—	
R.M.L.	12·5-inch 38 tons — 7 feet recoil ...	15 5	—	—	
	12·5-inch 38 tons — 6 ,, ,, ...	14 5	3 4·47	5 6	
	12-inch 35 tons	—	3 4·47	—	
	9-inch and 8-inch converted slide	11 5·5	—	—	
	8-inch depression and elevation	10 5·5	—	—	

* Casemate or dwarf.

TABLE OF GRADUATED ARCS.

	Nature of Slide.	Radii. A.*	Radii. C.	Radii. D.	Remarks.
		ft. in.	ft. in.	ft. in.	
B.L.	12-inch	19 4·25	—	—	
	6-inch Mark IV gun	—	5 10	—	
R.M.L.	12·5-inch 38 tons — 7 feet recoil ...	19 4·25	—	—	
	12·5-inch 38 tons — 6 ,, ,, ...	19 4·25	4 9·75	4 9·75	
	12·5-inch 38 tons — on turntable — 7 feet left	19 4·25	—	—	
	12·5-inch 38 tons — on turntable — 7 feet recoil right	19 5·75	—	—	
	12·5-inch 38 tons — on turntable — 6 feet left	13 6	—	—	
	12·5-inch 38 tons — on turntable — 6 feet recoil right	13 7·5	—	—	
	12-inch 35 tons	—	4 9·75	—	
	11- or 12-inch 25 tons	21 4·75	4 9·75	—	
	10-inch	21 4·75	4 9·75	3 8·75	
		—	7 9	—	7 feet parapet.
	10-inch on turntable — left	17 3	—	—	
	10-inch on turntable — right ..	17 4·5	—	—	
	9-inch...	—	5 10	—	7 feet parapet.
	9-inch and 7-inch	20 0	4 9·75	3 0·75	

* Casemate or dwarf.

Digitized by Google

APPEN-

TABLE OF SERVICE RACERS

(*Referred to in*

Nature of Slide.	Description of Racers.
B.L. 12-inch { lower tier	steel coned, without flange
B.L. 12-inch { upper ,,	,, ,, ,, ,, / steel flanged
H.P., B.L. 6-inch { Mark IV gun	steel (casting) flanged
H.P., B.L. 6-inch { ,, V ,,	,, ,, ,,
R.M.L. { 12·5-inch 38 tons { 7 feet recoil	steel coned, without flange
R.M.L. { 12·5-inch 38 tons { 6 feet { recoil	,, ,, ,, ,,
R.M.L. { 12·5-inch 38 tons { 6 feet { recoil, special	,, ,, ,, ,,
R.M.L. { 12-inch 35 tons	,, ,, ,, ,,
R.M.L. { 11- or 12-inch 25 tons	steel flanged
R.M.L. { 10-inch	,, ,,
R.M.L. { 9-inch and 7-inch	,, ,,
R.M.L. { 9-inch and 8-inch converted naval	iron, flat
R.M.L. { 8-inch { depression	,, ,,
R.M.L. { 8-inch { elevation	,, ,,
R.M.L. { 7-inch 6½ tons, converted naval	,, ,,
Moncrieff { R.B.L. 7-inch, and R.M.L. 64-pr.	,, ,,
Moncrieff { R.M.L. { 9-inch	,, ,,
Moncrieff { R.M.L. { 7-inch { Mark I	iron, without flange
Moncrieff { R.M.L. { 7-inch { ,, II	iron, flat
Medium, No. 1, 2, 3, 10, and 13	iron flanged
Medium, No. 4	metal flanged
Medium, No. 5	,, ,,
Medium, No. 6	iron flanged
Medium, No. 7	,, ,,
Medium, No. 8	,, ,,
Medium, No. 9	,, ,,
Medium, No. 11	,, ,,
Medium, No. 12, 14, 17, and 19	,, ,,
Medium, No. 16	,, ,,
Medium, No. 18	,, ,,

Digitized by Google

DIX VIII.

AND PIVOT PLUGS.

paragraph 98, *Part* 2.)

A.*					C.			
Radii of Racers.		Pivot Plug.			Radii of Racers.	Pivot Plug.		
Front.	Rear.	Length.	Diameter	Material		Length.	Diameter.	Material.
ft. in.	ft. in.	in.	in.		ft. in.	in.	in.	
9 2	21 2	—	—	—	--	—	—	—
9 2	—	—	—	—	—	—	—	—
—	18 0	—	—	—	—	—	—	—
—	—	—	—	—	4	—	—	—
—	—	—	—	—	5 0	—	—	—
10 2	21 2	—	—	—	—	—	—	—
10 2	20 2	—	—	—	5 8	†8·5	5·82	steel
10 2	21 2	—	—	—	—	—	—	—
—	—	—	—	—	5 8	†8·5	5·82	steel
8 0	18 0	—	—	—	5 8	†8·5	5·82	steel
8 0	18 0	—	—	—	‡5 8	†8·5	5·82	steel
6 3	16 6	—	—	—	‡5 5·75	†8·5	5·82	—
5 1	13 6	13·5	3	steel	—	—	—	—
4 7·5	14 11·5	13·5	4	steel	—	—	—	—
4 7·5	13 7	13·5	4	steel	—	—	—	—
5 1	13 6	13·5	3	steel	—	—	—	—
—	—	—	—	—	6 10	—	—	—
—	—	—	—	—	—	—	—	—
—	—	—	—	—	—	—	—	—
—	—	—	—	—	—	—	—	—
5 0	14 0	—	—	—	—	—	—	—
1 7·5	8 7·5	5	2·5	iron	—	—	—	—
1 5	6 10	—	—	—	—	—	—	—
1 6	6 10	6·687	2	steel	—	—	—	—
—	—	—	—	—	6 1	5·75	4	steel
5 0	16 6	—	—	—	6 1	5·75	4	steel
—	—	—	—	—	6 1	5·75	4	steel
—	—	—	—	—	6 1	7·5	3	steel
5 0	16 6	—	—	—	—	—	—	—
—	—	—	—	—	6 1	7·5	3	steel
—	—	—	—	—	6 1	7·5	3	steel

* Casemate or dwarf.

† 24-pr. cast-iron S.B. guns are used as sockets for pivot plugs, the sizes given being for this nature; but 18-pr. cast-iron guns can also be used, pivot plugs being 7·5 inches long, 5·29 inches diameter, to suit.

‡ Also for 10- and 9-inch 7 feet parapet.

Digitized by Google

Table of Service Racers, &c.—*continued.*

Nature of Slide.	Description of Racers.
B.L. 12-inch { lower tier	steel coned, without flange ...
B.L. 12-inch { upper ,, ...	{ ,, ,, ,, ... ,, ... / steel flanged ... ...
H.P., B.L. 6-inch { Mark IV gun	steel (casting) flanged ... ...
H.P., B.L. 6-inch { ,, V ,, ...	,, ,, ,, ...
R.M.L. { 12·5-inch 38 tons { 7 feet recoil	steel coned, without flange ...
R.M.L. { 12·5-inch 38 tons { 6 feet { recoil ...	,, ,, ,, ,, ...
R.M.L. { 12·5-inch 38 tons { 6 feet { recoil, special ...	,, ,, ,, ,, ...
R.M.L. { 12-inch 35 tons	,, ,, ,, ,, ...
R.M.L. { 11- or 12-inch 25 tons	steel flanged ... ...
R.M.L. { 10-inch	,, ,, ...
R.M.L. { 9-inch and 7-inch	,, ,, ...
R.M.L. { 9-inch and 8-inch converted naval	iron, flat ... ...
R.M.L. { 8-inch { depression	,, ,, ...
R.M.L. { 8-inch { elevation	,, ,, ...
R.M.L. { 7-inch 6½ tons, converted naval	,, ,, ...
Moncrieff { R.B.L. 7-inch, and R.M.L. 64-pr.	,, ,, ...
Moncrieff { R.M.L. { 9-inch...	,, ,, ...
Moncrieff { R.M.L. { 7-inch { Mark I	iron, without flange ... ...
Moncrieff { R.M.L. { 7-inch { ,, II	iron, flat ... ...
Medium, No. { 1, 2, 3, 10, and 13	iron flanged ... ...
Medium, No. { 4	metal flanged ... ...
Medium, No. { 5	,, ,, ...
Medium, No. { 6	iron flanged ... ...
Medium, No. { 7	,, ,, ...
Medium, No. { 8	,, ,, ...
Medium, No. { 9	,, ,, ...
Medium, No. { 11	,, ,, ...
Medium, No. { 12, 14, 17, and 19	,, ,, ...
Medium, No. { 16	,, ,, ...
Medium, No. { 18	,, ,, ...

Digitized by Google

D.					E.				
Radii of Racers.		Pivot Plug.			Radii of Racers.		Pivot Plug.		
Front.	Rear.	Length.	Diameter	Material	Front.	Rear.	Length.	Diameter	Material
ft. in.	ft. in.	in.	in.		ft. in.	ft. in.	in.	in.	
—	—	—	—	—	—	—	—	—	—
—	—	—	—	—	—	—	—	—	—
—	—	—	—	—	—	—	—	—	—
—	—	—	—	—	—	—	—	—	—
—	—	—	—	—	—	—	—	—	—
—	—	—	—	—	—	—	—	—	—
8 0	3 8	*8·5	5·82	steel	—	—	—	—	—
—	—	—	—	—	—	—	—	—	—
—	—	—	—	—	—	—	—	—	—
9 0	3 0	*8·5	5·82	steel	—	—	—	—	—
9 0	3 0	*8·5	5·82	steel	—	—	—	—	—
9 0	2 3·75	*8·5	5·82	steel	—	—	—	—	—
—	—	—	—	—	—	—	—	—	—
—	—	—	—	—	—	—	—	—	—
—	—	—	—	—	—	—	—	—	—
—	—	—	—	—	—	—	—	—	—
8 11	4 8·5	9·5	2·5	steel	—	—	—	—	—
11 10	6 2	13·5	4	steel	—	—	—	—	—
8 3·5	5 8·5	—	—	—	—	—	—	—	—
9 10	5 7·5	10·75	3·5	steel	—	—	—	—	—
—	—	—	—	—	—	—	—	—	—
—	—	—	—	—	—	—	—	—	—
—	—	—	—	—	—	—	—	—	—
—	—	—	—	—	—	—	—	—	—
—	—	—	—	—	—	—	—	—	—
—	—	—	—	—	—	—	—	—	—
—	—	—	—	—	10 8·25	2 2	5·75	4	steel
9 0	3 4·25	5·75	4	steel	10 8·25	2 2	5·75	4	steel
9 0	3 4·25	7·5	3	steel	10 8·25	2 2	7·5	3	steel
—	—	—	—	—	—	—	—	—	—
9 0	3 4·25	7·5	3	steel	10 8·25	2 2	7·5	3	steel
—	—	—	—	—	—	—	—	—	—

* 24-pr. cast-iron S.B. guns are used as sockets for pivot plugs, the sizes given being for this nature; but 18-pr. cast-iron guns can also be used, pivot plugs being 7·5 inches long, 5·29 inches diameter, to suit.

Digitized by Google

Table of Service Racers, &c.—*continued.*

Nature of Slide.		Description of Racers.
B.L. 12-inch	lower tier	steel coned, without flange
	upper ,,	,, ,, ,, ,,
		steel flanged
H P., B.L. 6-inch	Mark IV gun	steel (casting) flanged
	,, V ,,	,, ,, ,,
R.M.L.	12·5-inch 38 tons — 7 feet recoil	steel coned, without flange
	12·5-inch 38 tons — 6 feet — recoil	,, ,, ,, ,,
	12·5-inch 38 tons — 6 feet — recoil, special	,, ,, ,, ,,
	12-inch 35 tons	,, ,, ,, ,,
	11- or 12-inch 25 tons	steel flanged
	10 inch	,, ,,
	9-inch and 7-inch	,, ,,
	9-inch and 8-inch converted naval	iron, flat
	8-inch — depression	,, ,,
	8-inch — elevation	,, ,,
	7-inch 6½ tons, converted naval	,, ,,
Moncrieff	R.B.L. 7-inch, and R.M.L. 64-pr.	,, ,,
	R.M.L. — 9-inch	,, ,,
	R.M.L. — 7-inch — Mark I	iron, without flange
	R.M.L. — 7-inch — ,, II	iron, flat
Medium, No.	1, 2, 3, 10, and 13	iron flanged
	4	metal flanged
	5	,, ,,
	6	iron flanged
	7	,, ,,
	8	,, ,,
	9	,, ,,
	11	,, ,,
	12, 14, 17, and 19	,, ,,
	16	,, ,,
	18	,, ,,

Digitized by Google

F.

Radii of Racors.		Pivot Plug.		
Front.	Rear.	Length.	Diameter.	Material.
ft. in.	ft. in.	in.	in.	
—	—	—	—	—
—	—	—	—	—
—	—	—	—	—
—	—	—	—	—
—	—	—	—	—
—	—	—	—	—
—	—	—	—	—
—	—	—	—	—
—	—	—	—	—
—	—	—	—	—
—	—	—	—	—
—	—	—	—	—
—	—	—	—	—
—	—	—	—	—
—	—	—	—	—
—	—	—	—	—
—	—	—	—	—
—	—	—	—	—
—	—	—	—	—
—	—	—	—	—
—	—	—	—	—
—	—	—	—	—
—	—	—	—	—
—	—	—	—	—
12 10	2 2	5·75	4	steel
12 10	2 2	5·75	4	steel
12 10	2 2	7·5	3	steel
—	—	—	—	—
12 10	2 2	7·5		steel
—	—	—	—	—

Digitized by Google

APPEN

TOOLS FOR VENTING AND REPAIRING

See paragraph

List of Tools for Venting and Repairing Service, R.M.L.,

Articles.	Ordnance, S.B.									
	Guns, Carronades, and Howitzers.							Mortars.		
	8-inch.	68-pr.	42-pr.	32-pr.	24-pr.	18-pr.	12-pr.	13-inch.	10-inch.	8-inch.
VENTING.										
Vocabulary Section III.										
Chests, tool, empty, venting siege train — No. 1	—	—	—	—	—	—	—	—	—	—
,, 3*	—	—	—	—	—	—	—	—	—	—
Apparatus, venting, R.M.L. converted guns. — Blocks — expanding pulley, double	—	—	—	—	—	—	—	—	—	—
Blocks — expanding pulley, 4-in. treble	—	—	—	—	—	—	—	—	—	—
Blocks — Stop...	—	—	—	—	—	—	—	—	—	—
Cutters, rose...	—	—	—	—	—	—	—	—	—	—
Cylinders, guide	—	—	—	—	—	—	—	—	—	—
Falls	—	—	—	—	—	—	—	—	—	—
Frames, trunnion	—	—	—	—	—	—	—	—	—	—
Gyns, triangle, 10 feet	—	—	—	—	—	—	—	—	—	—
Monkeys	—	—	—	—	—	—	—	—	—	—
Rods, with hook	—	—	—	—	—	—	—	—	—	—
Wedges	—	—	—	—	—	—	—	—	—	—
Braces, smiths	*a*	*a*	*a*	*a*	*a*	*a*	*a*	*a*	*a*	*a*
,, ,, Drills, vent	—	—	—	—	—	—	—	—	—	—
,, ,, Rimers, vent — long	—	—	—	—	—	—	—	—	—	—
,, ,, Rimers, vent — short	*a*	*a*	*a*	*a*	*a*	*a*	*a*	*a*	*a*	*a*
,, ratchet, 20-inch	*a*	*a*	*a*	*a*	*a*	*a*	*a*	*a*	*a*	*a*
Braces, ratchet, 20-inch, **Drills.** — cone vent — $\frac{5}{8}$-inch	—	—	—	—	—	—	—	—	—	—
cone vent — G.	*a*	*a*	*a*	*a*	*a*	*a*	*a*	*a*	*a*	*a*
cone vent — G1	—	—	—	—	—	—	—	—	—	—
drifting vent — $\frac{5}{8}$-inch	—	—	—	—	—	—	—	—	—	—
drifting vent — E	*a*	*a*	*a*	*a*	*a*	*a*	*a*	—	*a*	*a*
drifting vent — E1	—	—	—	—	—	—	—	*a*	—	—
drifting vent — E2	—	—	—	—	—	—	—	—	—	—
drifting vent — E3	—	—	—	—	—	—	—	—	—	—
drifting vent — E4	—	—	—	—	—	—	—	—	—	—
tapping vent — $\frac{5}{8}$-inch	—	—	—	—	—	—	—	—	—	—
tapping vent — B	*a*	*a*	*a*	*a*	*a*	*a*	*a*	—	*a*	*a*
tapping vent — B1	—	—	—	—	—	—	—	*a*	—	—
tapping vent — B2	—	—	—	—	—	—	—	—	—	—
tapping vent — B3	—	—	—	—	—	—	—	—	—	—
tapping vent — B4	—	—	—	—	—	—	—	—	—	—
Braces, ratchet — 20-inch — Drills, vent, hollow — $\frac{5}{8}$-inch	—	—	—	—	—	—	—	—	—	—
Drills, vent, hollow — A	*a*	*a*	*a*	*a*	*a*	*a*	*a*	*a*	*a*	*a*
Drills, vent, hollow — A1	*a*	*a*	*a*	*a*	—	—	—	*a*	*a*	*a*
Sockets	*a*	*a*	*a*	*a*	*a*	*a*	*a*	*a*	*a*	*a*
Posts, 29-inch	*a*	*a*	*a*	*a*	*a*	*a*	*a*	*a*	*a*	*a*
12-inch	—	—	—	—	—	—	—	—	—	—

a. Common to all these.

Digitized by Google

DIX IX.

R.M.L. AND S.B. ORDNANCE.

74, Part 2.

and S.B. Ordnance, showing what are required for each nature.

| ORDNANCE, R.M.L. | | |

Venting and Repairing R.M.L.

Articles.	Ordnance, S.B.									
	Guns, Carronades, and Howitzers.							Mortars.		
	8-inch.	68-pr.	42-pr.	32-pr.	24-pr.	18-pr.	12-pr.	13-inch.	10-inch.	8-inch.
Braces, ratchet — Drills — cone, vent, 1¼ in.	—	—	—	—	—	—	—	—	—	—
Braces, ratchet — Drills — drifting, 4-in. vent	—	—	—	—	—	—	—	—	—	—
Braces, ratchet — Drills — drifting, 10 ,, vent	—	—	—	—	—	—	—	—	—	—
Braces, ratchet — Drills — tapping, 4 ,, vent	—	—	—	—	—	—	—	—	—	—
Braces, ratchet — Drills — tapping, 10 ,, vent	—	—	—	—	—	—	—	—	—	—
Braces, ratchet — vent, hollow, 1⅛-in.	—	—	—	—	—	—	—	—	—	—
Braces, ratchet — Posts, 20-inch.	—	—	—	—	—	—	—	—	—	—
Brushes. gun, soft, small	*a*	*a*	*a*	*a*	*a*	*a*	*a*	*a*	*a*	*a*
Chisels — cold, flat (set of 5)	*a*	*a*	*a*	*a*	*a*	*a*	*a*	*a*	*a*	*a*
Chisels — graver (set of 3)	*a*	*a*	*a*	*a*	*a*	*a*	*a*	*a*	*a*	*a*
Drifts. steel, vent square — ⅝-inch	—	—	—	—	—	—	—	—	—	—
Drifts. steel, vent square — 6 ,,	—	—	—	—	—	—	—	—	—	—
Drifts. steel, vent square — 8 ,,	—	—	—	—	—	—	—	—	—	—
Drifts. steel, vent square — 10½ ,,	—	—	—	—	—	—	—	—	—	—
Drifts. steel, vent square — F	*a*	*a*	*a*	*a*	*a*	*a*	*a*	*a*	*a*	*a*
Drifts. steel, vent square — F1	*a*	*a*	*a*	*a*	*a*	*a*	*a*	*a*	*a*	*a*
Drifts. steel, vent square — F2	*a*	*a*	*a*	*a*	*a*	*a*	*a*	*a*	*a*	*a*
Drifts. steel, vent square — F3	*a*	*a*	*a*	*a*	*a*	*a*	*a*	*a*	*a*	*a*
Drifts. steel, vent square — F4	*a*	*a*	*a*	*a*	*a*	*a*	*a*	*a*	*a*	*a*
Drifts. steel, vent square — F5	*a*	*a*	*a*	*a*	*a*	*a*	*a*	*a*	*a*	*a*
Files — bastard, safe edge, 14-inch (with handle)	*a*	*a*	*a*	*a*	*a*	*a*	*a*	*a*	*a*	*a*
Files — smooth, safe edge, 10-inch (with handle)	—	—	—	—	—	—	—	—	—	—
Gauges, vent — long	—	—	—	—	—	—	—	—	—	—
Gauges, vent — short	*a*	*a*	*a*	*a*	*a*	*a*	*a*	*a*	*a*	*a*
Gauges, vent — 15-inch (set of 4)	—	—	—	—	—	—	—	—	—	—
Gouges, cold, 9 in. × 1 in.	*a*	*a*	*a*	*a*	*a*	*a*	*a*	*a*	*a*	*a*
Hammers, fitters — 24 oz.	*a*	*a*	*a*	*a*	*a*	*a*	*a*	*a*	*a*	*a*
Hammers, fitters — 8 ,,	*a*	*a*	*a*	*a*	*a*	*a*	*a*	*a*	*a*	*a*
Instruments, taking impressions, vents — No. 1	*a*	*a*	*a*	*a*	*a*	—	—	*a*	*a*	*a*
Instruments, taking impressions, vents — ,, 2	—	—	—	—	—	—	—	—	—	—
Instruments, taking impressions, vents — Blocks, adjusting No. 1	1	1	1	1	1	—	—	1	1	1
Instruments, taking impressions, vents — Blocks, adjusting ,, 2	—	—	—	—	—	—	—	—	—	—
Instruments, taking impressions, vents — Pieces, lengthening, No. 1, 4 ft.	—	—	—	—	—	—	—	—	—	—
Instruments, taking impressions, vents — Plates, No. 1 A	*a*	*a*	*a*	—	—	—	—	*a*	*a*	*a*
Instruments, taking impressions, vents — Plates, No. 1 B	—	—	—	*a*	*a*	—	—	—	—	—
Instruments, taking impressions, vents — Plates, No. 1 C	—	—	—	—	—	—	—	—	—	—
Rimers, cone vent — ⅝-inch	—	—	—	—	—	—	—	—	—	—
Rimers, cone vent — 1⅛-inch	—	—	—	—	—	—	—	—	—	—
Rimers, cone vent — H	*a*	*a*	*a*	*a*	*a*	*a*	*a*	*a*	*a*	*a*
Rimers, cone vent — H1	—	—	—	—	—	—	—	—	—	—
Saws, cutting metal, 14-inch, special	*a*	*a*	*a*	*a*	*a*	*a*	*a*	*a*	*a*	*a*
Taps. vent bush — ⅝-inch	—	—	—	—	—	—	—	—	—	—
Taps. vent bush — 1⅛ ,,	—	—	—	—	—	—	—	—	—	—
Taps. vent bush — long C3	—	—	—	—	—	—	—	—	—	—
Taps. vent bush — long C4	—	—	—	—	—	—	—	—	—	—
Taps. vent bush — long C5	—	—	—	—	—	—	—	—	—	—

a. Common to all these.

Digitized by Google

and S.B. Ordnance—*continued.*

Ordnance, R.M.L.																						Remarks.
Guns.																			Howitzers.			
12·5-in., Mark I.	12-in.	11-in.	10-in.	9-in.	8-in.	7-in.	64-pr., 64-cwt., Marks I, II, & III.	64-pr., 58- and 71-cwt.	Converted. 80-pr.	6·6-in.	40-pr.	25-pr.	16-pr.	13-pr.	9-pr.	7-pr.	2·5-in.	8-in. 70-&46-cwt.	6·6 in.	6·3-in.	
—	—	—	—	—	—	—	—	—	—	*a*	*a*	*a*	*a*	*a*	*a*	—	—	*a*	*a*	*a*	
—	—	—	—	—	—	—	—	—	—	*a*	*a*	*a*	*a*	*a*	*a*	—	—	*a*	*a*	*a*	
—	—	—	—	—	—	—	—	—	—	*a*	*a*	*a*	*a*	*a*	*a*	—	—	*a*	*a*	*a*	
—	—	—	—	—	—	—	—	—	—	*a*	**a**	*a*	*a*	*a*	*a*	—	—	*a*	*a*	*a*	
—	—	—	—	—	—	—	—	—	—	*a*	*a*	**a**	—	—	—	—	—	**a**	**a**	**a**	
a	*a*	*a*	*a*	*a*	*a*	*a*	*a*	*a*	*a*	*a*	*a*	*a*	*a*	*a*	*a*	*a*	*a*	*a*	*a*	*a*	
a	*a*	*a*	*a*	*a*	*a*	*a*	*a*	*a*	*a*	*a*	*a*	*a*	*a*	*a*	*a*	*a*	*a*	*a*	*a*	*a*	
a	*a*	*a*	*a*	*a*	*a*	*a*	*a*	*a*	*a*	*a*	*a*	*a*	*a*	*a*	*a*	*a*	*a*	*a*	*a*	*a*	
—	—	—	—	—	—	—	—	—	—	—	—	—	—	—	—	*a*	*a*	—	—	—	
—	—	—	—	—	—	—	—	—	—	*a*	*a*	*a*	*a*	*a*	*a*	—	—	*a*	*a*	*a*	
a	*a*	*a*	*a*	*a*	*a*	*a*	*a*	*a*	*a*	—	—	—	—	—	—	—	—	—	—	—	
a	*a*	*a*	*a*	*a*	—	—	—	—	—	—	—	—	—	—	—	—	—	—	—	—	
a	*a*	*a*	*a*	*a*	*a*	*a*	*a*	*a*	*a*	*a*	*a*	*a*	*a*	*a*	*a*	*a*	*a*	*a*	*a*	*a*	The "large" file handle is required for each of these files.
a	*a*	*a*	*a*	*a*	*a*	*a*	*a*	—	—	*a*	*a*	*a*	*a*	*a*	*a*	*a*	*a*	*a*	*a*	*a*	
—	—	—	—	—	—	—	—	—	—	*a*	*a*	*a*	—	—	—	—	—	*a*	*a*	*a*	
a	*a*	*a*	*a*	*a*	*a*	*a*	*a*	*a*	*a*	—	—	—	—	—	—	—	—	—	—	—	
—	—	—	—	—	—	—	—	—	—	*a*	*a*	*a*	—	—	—	—	—	*a*	*a*	*a*	
a	*a*	*a*	*a*	*a*	*a*	*a*	*a*	*a*	*a*	*a*	*a*	*a*	*a*	*a*	*a*	*a*	*a*	*a*	*a*	*a*	
a	*a*	*a*	*a*	*a*	*a*	*a*	*a*	*a*	*a*	*a*	*a*	*a*	*a*	*a*	*a*	*a*	*a*	*a*	*a*	*a*	
a	*a*	*a*	*a*	*a*	*a*	*a*	*a*	*a*	*a*	*a*	*a*	*a*	*a*	*a*	*a*	*a*	*a*	*a*	*a*	*a*	
a	*a*	*a*	*a*	*a*	*a*	*a*	*a*	*a*	*a*	*a*	*a*	*a*	*a*	*a*	*a*	*a*	*a*	*a*	*a*	*a*	
1	1	1	1	1	1	1	2*	*a*	*a*	—	—	—	—	—	—	—	—	*a*	*a*	*a*	With plate.
—	—	—	—	—	—	—	—	—	—	1	1	1	1	1	—	—	—	2†	1	1	* 1 block for Mark I and 1 for Marks II and III.
a	*a*	*a*	*a*	—	—	—	—	—	—	—	—	—	—	—	—	—	—	—	—	—	
a	*a*	*a*	*a*	*a*	*a*	*a*	—	—	—	—	—	—	—	—	—	—	—	—	—	—	† 1 for each nature.
—	—	—	—	—	—	—	*a*	—	—	—	—	—	—	—	—	—	—	—	—	—	
—	—	—	—	—	—	—	—	*a*	*a*	—	—	—	—	—	—	—	—	—	—	—	
—	—	—	—	—	—	—	—	—	—	—	—	—	—	—	—	*a*	*a*‡	—	—	—	‡ Not required for Mark II gun.
—	—	—	—	—	—	—	—	—	—	*a*	*a*	*a*	*a*	*a*	*a*	—	—	*a*	*a*	*a*	
a	*a*	*a*	*a*	*a*	—	—	—	—	—	—	—	—	—	—	—	—	—	—	—	—	
a	*a*	*a*	*a*	*a*	*a*	*a*	*a*	*a*	*a*	*a*	*a*	*a*	*a*	*a*	*a*	*a*	*a*	*a*	*a*	*a*	
—	—	—	—	—	—	—	—	—	—	—	—	—	—	—	—	*a*	*a*	—	—	—	
—	—	—	—	—	—	—	—	—	—	*a*	*a*	*a*	*a*	*a*	*a*	—	—	*a*	*a*	*a*	
a	*a*	*a*	*a*	—	—	—	—	—	—	—	—	—	—	—	—	—	—	—	—	—	

Digitized by Google

Venting and Repairing R.M.L.

Articles.	Ordnance, S.B.									
	Guns, Carronades, and Howitzers.							Mortars.		
	8-inch.	68-pr.	42-pr.	32-pr.	24-pr.	18-pr.	12-pr.	13-inch.	10-inch.	8-inch.
Taps, vent, bush — short C1 C2 C3 C4 C5	*a*	*a*	*a*	*a*	*a*	*a*	*a*	*a*	*a*	*a*
Taps, vent, bush — D3 D4 D5	*a*	*a*	*a*	*a*	*a*	*a*	*a*	*a*	*a*	*a*
Wires, directing — 48-inch	*a*	*a*	*a*	*a*	*a*	*a*	*a*	*a*	*a*	*a*
Wires, directing — 18 ,,	—	—	—	—	—	—	—	—	—	—
Wrenches — taps and vents — large	—	—	—	—	—	—	—	—	—	—
Wrenches — taps and vents — small	—	—	—	—	—	—	—	—	—	—
Wrenches — taps, vent bush	*a*	*a*	*a*	*a*	*a*	*a*	*a*	*a*	*a*	*a*
Wrenches — vent bush	*a*	*a*	*a*	*a*	*a*	*a*	*a*	*a*	*a*	*a*
REPAIRING.										
Vocabulary Section III.										
Chests, stocks and dies, Whitworth thread, 1½-inch to ¼-inch	—	—	—	—	—	—	—	—	—	—
Braces, ratchet — 12-inch, Drills	—	—	—	—	—	—	—	—	—	—
Braces, ratchet — 9 ,,	—	—	—	—	—	—	—	—	—	—
Braces, ratchet — Posts. 20-inch	—	—	—	—	—	—	—	—	—	—
Drifts, steel, square — sets	—	—	—	—	—	—	—	—	—	—
Files, bastard, round — 16-inch (with handle)	—	—	—	—	—	—	—	—	—	—
Files, bastard, round — 12 ,, (with handle)	—	—	—	—	—	—	—	—	—	—
Files, repairing ordnance, fish-backed — bastard — 14-inch	—	—	—	—	—	—	—	—	—	—
Files, repairing ordnance, fish-backed — bastard — 12 ,,	—	—	—	—	—	—	—	—	—	—
Files, repairing ordnance, fish-backed — smooth — 14 ,,	—	—	—	—	—	—	—	—	—	—
Files, repairing ordnance, fish-backed — smooth — 12 ,,	—	—	—	—	—	—	—	—	—	—
Machines, riffing, hand, R.M.L. — guns	—	—	—	—	—	—	—	—	—	—
Machines, riffing, hand, R.M.L. — howitzers	—	—	—	—	—	—	—	—	—	—
Rimers, socket, drop sight	—	—	—	—	—	—	—	—	—	—
Sets, socket, drop sight	—	—	—	—	—	—	—	—	—	—

a. common to all these.

Digitized by Google

and S.B. Ordnance—*continued.*

Ordnance, R.M.L.																					Remarks.
Guns.																		Howitzers.			
								Converted.													
12·5-in., Mark I.	12-in.	11-in.	10-in.	9-in.	8-in.	7-in.	64-pr., 64-cwt., Marks I.II.&III.	64-pr., 58- and 71-cwt.	80-pr.	6·6-in.	40-pr.	25-pr.	16-pr.	13-pr.	9-pr.	7-pr.	2·5-in.	8-in. 70-&46-cwt.	6·6-in.	6·3-in.	
—	—	—	—	a	a	a	a	a	a	—	—	—	—	—	—	—	—	—	—	—	
—	—	—	—	—	—	—	—	a	a	—	—	—	—	—	—	—	—	—	—	—	For C.I. ordnance with vent bushes, having 6 threads per inch.
a	a	a	a	a	a	a	a	a	a	—	—	—	—	—	—	—	—	—	—	—	
—	—	—	—	—	—	—	—	—	—	a	a	a	a	a	a	a	a	a	a	a	
—	—	—	—	—	—	—	—	—	—	a	a	a	a	a	a	—	—	a	a	a	
—	—	—	—	—	—	—	—	—	—	—	—	—	—	—	—	a	a	—	—	—	
a	a	a	a	a	a	a	a	a	a	—	—	—	—	—	—	—	—	—	—	—	
a	a	a	a	a	a	a	a	a	a	—	—	—	—	—	—	—	—	—	—	—	
a	a	a	a	a	a	a	a	a	a	a	a	a	a	a	a	a	—	a	a	a	
a	a	a	a	a	a	a	a	a	a	a	a	a	a	a	a	a	—	a	a	a	
a	a	a	a	a	a	a	a	a	a	a	a	a	a	a	a	a	—	a	a	a	
a	a	a	a	a	a	a	a	a	a	a	a	a	a	a	a	a	—	a	a	a	
a	a	a	a	a	a	a	a	a	a	a	a	a	a	a	a	a	—	a	a	a	
a	a	a	a	a	a	a	a	a	a	a	a	a	a	a	a	a	—	a	a	a	The "large" file handle is required for each of these files.
a	a	a	a	a	a	a	a	a	a	a	a	a	a	a	a	a	—	a	a	a	
a	a	a	a	a	a	a	a	a	a	a	a	a	a	a	a	a	—	a	a	a	
a	a	a	a	a	a	a	a	a	a	a	a	a	a	a	a	a	—	a	a	a	
a	a	a	a	a	a	a	a	a	a	a	a	a	a	a	a	a	—	a	a	a	
a	a	a	a	a	a	a	a	a	a	a	a	a	a	a	a	a	—	a	a	a	
1	—	1	1	1	1	1	a	a	a	—	—	—	—	—	—	—	—	—	—	—	
—	—	—	—	—	—	—	—	—	—	—	—	—	—	—	—	—	—	1*	1	—	* 70-cwt.
a	a	a	a	a	a	a	a	a	a	a	a	a	a	—	—	—	—	a	a	a	
a	a	a	a	a	a	a	a	a	a	a	a	a	a	—	—	—	—	a	a	a	

Digitized by Google

FACING R.B.L. GUNS.

Packed in a Chest.

Tools, facing, R.B.L.—	7-inch. Letter.	7-inch. No.	40-pr. Letter.	40-pr. No.	20-pr. Letter.	20-pr. No.	12 or 9-pr. Letter.	12 or 9-pr. No.
	F 1	1	E	1	G	1	D	1
	G	1	F 1	1	I 1	1	F 1	1
Blocks	—	—	F 2	1	I 2	1	F 2	1
	K	1	H	1	L	1	J	1
	—	—	G	1	K	1	I	1
	—	—	M	1	M	1	C	1
Collars	—	—	B O	set of 2	—	—	—	—
	E 1	set of 2	D	1	F	1	K	1
	E 2	,,	—	—	J	1	G	1
Cutters...	H H	,,	—	—	J 1	1	G 1	1
	—	—	—	—	H	1	E	1
Guards, wood	O	1	—	—	P	1	S	1
Guides—								
Breech-screw ...	C	set of 2	A	set of 2	C	set of 2	M	set of 2
Powder chamber ...	D 1	1	ex. C	1	D 1	1	N 1	1
	—	—	—	—	D 2	1	N 2	1
Wood	—	—	N	1	Q	1	R	1
Handles	P	1	P	1	—	—	—	—
Keys	—	—	—	—	N	1	O	1
Levers	B	1	J	1	B	1	B	1
Punches	N	1	L	1	R	1	P	1
	—	—	K	1	—	—	—	—
Spindles	A	1	I	1	A	1	A	1
Washers, stop ...	—	—	Q	1	—	—	1	—
	J J	set of 2	—	—	E E	set of 2	L L	set of 2
Wrenches	M	1	R	1	O	1	Q	1

RE-COPPERING B.L. AND S.B.B.L. GUNS.

Packed in a Chest.

Tools, re-coppering—	B.L. 8-inch. Mark VII.	B.L. 6-inch. Mark II.	B.L. 6-inch. Mark V.	S.B. B.L. 32-pr.
Blocks—				
Guide	1	1	1	1
No. 1	1	1	1	1
,, 2	1*	1	1*	1
,, 3	1	1	1	1
,, 4	—	1	1	1
,, 5	1	1	1	1
,, 6	1	1	—	—
Cups, obturating	1	1	1	1
Cutters	1	1	—	—
Drifts	1	1	1	1
Spindles	1	1	1	1
Wrenches	1	1	1	set of 3

* With bronze guide.

Digitized by Google

APPENDIX X.

CHEST, TOOL, FILLED, No. 3D.

(Repairing Wrought-iron Garrison Carriages and Slides, L).

NOTE.—This chest of tools is to be held on R.A. charge for use exclusively by Ordnance Artificers.

Articles.			No.
	Vocabulary Section III.		
Chests, tool, empty, No. 3			1
Braces, ratchet	18-inch, strong		1
	18-inch, strong, Drills	1½-inch	1
		1⅛ ,,	1
		1¼ ,,	1
		1⅛ ,,	1
		1 ,,	6
		⅞ ,,	6
		¾ ,,	6
		⅝ ,,	6
		½ ,,	4
		⅜ ,,	4
		¼ ,,	1
	18-inch, strong, Drills, tapping	1-inch	6
		⅞ ,,	6
		¾ ,,	6
		⅝ ,,	6
		½ ,,	3
		⅜ ,,	3
	Posts, 24-inch		2
Callipers	10-inch	pair	1
	6 ,,	,,	1
Cans, oil, lubricating, G. S.			1
Chisels	cross-cut	8 inches × ⅜ inch	2
		7 ,, × ¼ ,,	3
	engraving		3
	rivet head		1
	hand, cold, ¾-inch × 8-inch		4
Compasses, wing, 10-inch		pairs	1
Dividers, spring, 6-inch			1
Drifts, steel, round	¾-inch		1
	⅞ ,,		1
	1 ,,		1

Digitized by Google

Chest, Tool, Filled, No. 3D.—*continued.*

Articles.						No.
Vocabulary Section III.—(continued).						
Drivers, screw, G. S., 12-in.						1
Files	bastard	flat	16-inch			2
			14 ,, ...			10
			12 ,, ...			2
			8 ,, ...			4
			6 ,, ...			3
		half-round	16 ,, ...			3
			14 ,, ...			4
			10 ,, ...			4
			8 ,, ...			4
			6 ,, ...			2
		knife	5 ,, ...			2
		round	16 ,, ...			2
			14 ,, ...			2
			12 ,, ...			4
			6 ,, ...			2
			4 ,, ...			2
		safe edge	16 ,, ...			3
			14 ,, ...			3
			8 ,, ...			2
			6 ,, ...			2
		square	16 ,, ...			1
			12 ,, ...			1
			10 ,, ...			2
		three square	16 ,, ...			2
		warding	5 ,, ...			2
			3½ ,, ...			2
	rough, half-round		14 ,, ...			2
	second cut	half-round	14 ,, ...			2
		safe edge	14 ,, ...			2
			10 ,, ...			1
			6 ,, ...			1
			4 ,, ...			1
	dead smooth	half-round	4 ,, ...			1
		safe edge	4 ,, ...			1
	smooth	half-round	14 ,, ...			1
			8 ,, ...			2
			6 ,, ...			2
		safe edge	12 ,, ...			1
			8 ,, ...			2
			6 ,, ...			1
			4 ,, ...			1
Flatters, smiths						1

Digitized by Google

Chest, Tool, Filled, No. 3D.—*continued.*

Articles.	No.
Vocabulary Section III.—(continued).	
Fullers { bottom	1
Fullers { top	1
Hammers { fitters .... { 48-oz., copper	1
Hammers { fitters .... { 24 „	1
Hammers { fitters .... { 8 „	2
Hammers { boiler makers, rivcting { 3½-lb.	2
Hammers { boiler makers, rivcting { 2½ „	2
Handles, file { large	8
Handles, file { middling	10
Handles, file { small	6
Handles, file { swan neck	1
Holders, rivet head { large	1
Holders, rivet head { small	1
Irons, soldering, tinmans	1
Levels, spirit block, 12 inches	1
Plates, screw, 10 taps, 20-hole	1
Pliers { round nose ... . pairs	1
Pliers { side cutting, 7-inch .... „	1
Punches { centre, 4½-inch	2
Punches { round, ½-in. by 10-in.	1
Punches { smiths, cold	2
Rods, smiths, iron	4
Rules { ordnance artificers, 2-feet	1
Rules { saddletreemakers	1
Saws .... { cutting, metal, 12-in.	1
Saws .... { „ „ Blades 12-in. (spare)	2
Scribers	1
Snaps, riveting, rod .... { 1⅜-in.	1
Snaps, riveting, rod .... { 1¼ „	2
Snaps, riveting, rod .... { 1⅛ „	1
Snaps, riveting, rod .... { 1 „	2
Snaps, riveting, rod .... { ⅞ „	1
Snaps, riveting, rod .... { ¾ „	1
Snaps, riveting, rod .... { ⅝ „	1
Snaps, riveting, rod .... { ½ „	1
Spanners, ordnance artificers, double ended .... { 1½-in. and 1⅜-in.	1
Spanners, ordnance artificers, double ended .... { 1¼ „ „ 1⅛ „	1
Spanners, ordnance artificers, double ended .... { 1 „ „ ⅞ „	1
Spanners, ordnance artificers, double ended .... { ¾ „ „ ⅝ „	1
Spanners, ordnance artificers, double ended .... { ½ „ „ ⅜ „	1

Digitized by Google

Chest, Tool, Filled, No. 3D—*continued.*

Articles.	No.
Vocabulary Section III.—(continued).	
Spanners, ordnance artificers, socket .... — $1\frac{1}{8}$-inch	1
— 1 „	1
— $\frac{7}{8}$ „	1
— $\frac{3}{4}$ „	1
— $\frac{5}{8}$ „	1
— $\frac{1}{2}$ „	1
Squares, smiths, steel	1
Stakes, smiths	1
Stocks, drill, bevel wheel (with bits)	1
„ „ „ „ Bits (spare) .... sets	1
Stones, oil, carpenters	1
Straight edge, 2 feet	1
Tongs, wheeler-fitters .... pair	1
Vices, hand — 20-oz.....	1
— 8 „	1
Vocabulary Section IV.	
Aprons, basil, brown....	2
Cloth, emery, fine .... sheets	6
Cloths, sponge	6
Handbooks for military artificers	1
Vocabulary Section V. (1).	
Clinometers, Watkin	1
The undermentioned are not carried in the Chests, and will be separately demanded, charged, and accounted for.	
Vocabulary Section III.	
Chests, stocks and dies, Whitworth thread, $1\frac{1}{8}$-in. to $\frac{1}{4}$-in., filled	1
Grindstones, F.S., 18-inch	1
Plates, surface, ordnance artificers, 3′ × 1′ 9″	1
Straight edges — 6 ft.	1
— 4 ft.	1
Vices, standing, 80 lbs.* †	1
Vocabulary Section VI.	
Grindstones, 24 inches	1

* As these become unserviceable they will be replaced by the "Vice, standing, 80 lbs., with iron bench."
† An Engineer supply.

Digitized by Google

CHEST, TOOL, FILLED, No. 4c.

(Repairing Wood Garrison Carriages and Slides L) for Ordnance or R.A. Garrison Artificers.

Articles.	No.
Vocabulary Section III.	
Chests, tool, empty, No. 4	1
Adapters, brace	2
Augers shell 1-inch	1
Augers shell $\frac{7}{8}$ „	1
Augers shell $\frac{3}{4}$ „	1
Augers Handles 16-inch	1
Augers Handles $13\frac{1}{2}$ „	1
Bevels, steel blade, 12-inch	1
Braces carpenters	1
Braces carpenters, Bits* (set of 24)	1 sets
Chisels, firmer $1\frac{1}{2}$-inch	2
Chisels, firmer 1 „	2
Drivers, screw, G. S. 24-inch	1
Drivers, screw, G. S. 12 „	1
Drivers, screw, G. S. 4 „	2
Gouges, firmer, 1-in.	1
Lines, carpenters	1
Pencils, carpenters	6
Planes jack, double iron	1
Planes rabbet, skew, $1\frac{1}{2}$-inch	1
Planes smoothing, G. S.	1
Pots, glue, 1-pint	1
Rasps, fine flat, 10-in.	1
Rasps, fine half-round, 10-in.	1
Reels, carpenters line	1

* Detail of bits:—

Braces, carpenters, Bits	centre, $1\frac{1}{2}$, 1, $\frac{7}{8}$, $\frac{3}{4}$, $\frac{5}{8}$, $\frac{1}{2}$, and $\frac{3}{8}$-inch	7
	countersink flat	1
	countersink rose	1
	dowling sash	1
	gouge, $\frac{7}{16}$, $\frac{3}{8}$, $\frac{5}{16}$, $\frac{1}{4}$, $\frac{3}{16}$, and $\frac{1}{8}$-inch	6
	nose, $\frac{3}{8}$, $\frac{5}{16}$, $\frac{1}{4}$, $\frac{3}{16}$, and $\frac{1}{8}$ inch	5
	rimer, square	1
	screwdriver	1
	taper	1
		24

Digitized by Google

Chest, Tool, Filled, No. 4c—*continued.*

Articles.	No.
Vocabulary Section III.—(*continued*).	
Rules, carpenters, 2-feet	1
Saws { compass	1
Saws { dovetail, brass back	1
Saws { hand, 24-in.	1
Spanners, McMahon, 15-in.	1
Vices, bench parallel, 40 lbs.*	1
Vocabulary Section IV.	
Aprons, basil, brown	2
Chalk, white (for line, carpenters) lb.	¼

* An Engineer supply.

TOOLS, FARRIERS, R.A., SIEGE.

Supplied by or at the expense of the Farrier (not supplied unless specially demanded).

Articles.	No.
Vocabulary Section III.	
Bags, tool, farriers	1
Buffers, farriers	4
Chisels, farriers	3
Hammers, farriers { pointing	2
Hammers, farriers { shoeing	4
Hammers, farriers { sledge, 9½-lb.	1
Hammers, farriers { turning	2
Knives { drawing, farriers	12
Knives { searching	2
Pincers, farriers pairs	4
Pritchels	4
Rasps, farriers, 15-inch	8
Stakes, farriers	2
Stamps, farriers	2
Tongs, farriers pairs	6

Digitized by Google

CHEST, TOOL, FILLED, SPECIAL, REPAIRING R.B.L. GUNS, L.S.

Articles.	No.
Vocabulary Section III.	
Chests, tool, empty, special, repairing R.B.L. guns, land service	1
Braces, ratchet, 9-inch	1
„ „ 9 „ Drills (Nos. 1 to 11)	11
Cans, oil, lubricating, smiths	1
Chisels, cross cut — 18 inches × ¼ inch	2
Chisels, cross cut — 7 „ × „	1
Drifts, steel, upsetting — 7-inch	1
Drifts, steel, upsetting — 20-pr.	1
Drifts, steel, upsetting — 12 „	1
Drivers, screw — bent	1
Drivers, screw — G. S., 5-inch	1
Files — feather edge, and herring bone, 6-inch	6
Files — flat — 10-inch	4
Files — flat — 8 „	4
Files — half-round — 10 „	1
Files — half-round — 6 „	1
Files — knife — 9 „	1
Files — knife — 8 „	1
Files — knife — 6 „	3
Files — parallel, 2 safe sides, ¼-in. × ⅛-in., 6-inch	1
Files — bastard — round — 12-inch	2
Files — bastard — round — 8 „	2
Files — bastard — round — 6 „	1
Files — bastard — round — 5 „	1
Files — bastard — safe edge — 12 „	1
Files — bastard — safe edge — 10 „	1
Files — bastard — square — 10 „	2
Files — bastard — square — 8 „	1
Files — bastard — warding — 5 „	2
Files — bastard — warding — cut on one side, 3½-inch	2
Files — second cut — one safe side, square taper — 8-inch	1
Files — second cut — one safe side, square taper — 6 „	1
Files — second cut — safe edge, 8-inch	1
Files — smooth — half-round — 8-inch	1
Files — smooth — half-round — 6 „	1
Files — smooth — half-round — 4 „	1
Files — smooth — knife, 6-inch	3

Digitized by Google

Chest, Tool, filled, Special, Repairing, R.B.L. Guns, L.S.—*continued.*

Articles.	No.
Vocabulary Section III.—continued.	
Files, smooth, safe edge .... 12 inch	1
10 „	1
8 „	1
4 „	1
Handles, file large	3
middling	3
small	3
Hammers, fitters, 8-oz.	1
Punches, centre, 4½ inches	1
Punches, R.B.L. guns brass 7 inches	1
6 „	1
copper, 5½ „	1
steel 12 „	1
7 „	1
6 „	1
4 „	1
Spanners, McMahon, 9-inch	1
Tommies, R.B.L. guns forked	1
plain	1
Vocabulary Section V. (1).	
Wrenches, sight, R.B.L.	1
The following materials are also supplied with the foregoing tools, viz. :—	
Vocabulary Section IV.	
Cloth, emery, flour .... sheets	6
Cloths, sponge	12

Digitized by Google

CHEST, TOOL, FILLED, No. 3E.

(Wheeler-Fitters, R.A. Siege, for Wrought-iron Carriages, and for repairs to Saddletrees).

Articles.	No.
Vocabulary Section III.	
Chests, tool, empty, No. 3	1
Adapters, brace	1
Adzes, carpenters — Heads	1
Adzes, carpenters — Handles	1
Augers — shell — $1\frac{1}{4}$-inch	1
Augers — shell — $1\frac{1}{16}$ "	1
Augers — shell — 1 "	1
Augers — shell — $\frac{7}{8}$ "	1
Augers — shell — $\frac{5}{8}$ "	1
Augers — shell — $\frac{1}{2}$ "	1
Augers — Handles — 16	1
Augers — Handles — $13\frac{1}{2}$	1
Augers — Handles — 12	1
Awls — Blades, brad	12
Awls — Handles, brad — large	2
Awls — Handles, brad — small	2
Bags, tool, carpenters	1
Bevels, steel blade, 12-inch	1
Braces — carpenters, Bits (set of 24)* — sets	1
Braces — ratchet, 9-inch	1
Braces — " 9 " Drills (Nos. 1 to 11)	11
Braces — smiths	1
" Bits — countersink rose	1
" Bits — rimer — half-round	1
" Bits — rimer — square	1
Brushes, paint, sash tool, No. 6 (for glue)	1
Callipers, 6-inch — pairs	1
Cans, oil, lubricating, G. S.	1

* Detail of Bits :—

Braces, carpenters, Bits.	centre, $1\frac{1}{8}$, 1, $\frac{7}{8}$, $\frac{3}{4}$, $\frac{5}{8}$, $\frac{1}{2}$, and $\frac{3}{8}$-inch	7
	countersink — flat	1
	countersink — rose	1
	dowling sash	1
	gouge, $\frac{7}{16}$, $\frac{3}{8}$, $\frac{5}{16}$, $\frac{1}{4}$, $\frac{3}{16}$, and $\frac{1}{8}$-inch	6
	nose, $\frac{3}{8}$, $\frac{5}{16}$, $\frac{1}{4}$, $\frac{3}{16}$, and $\frac{1}{8}$-inch	5
	rimer, square	1
	screwdriver	1
	taper	1
		24

Digitized by Google

Chest, Tool, filled, No. 3E—*continued.*

Articles.	No.
Chisels — cross-cut, 7 inches × ¼ inch	2
Chisels — firmer, coachmakers — 1½-inch	1
Chisels — firmer, coachmakers — 1¼ „	1
Chisels — firmer, coachmakers — 1 „	1
Chisels — firmer, coachmakers — ¾ „	1
Chisels — firmer, coachmakers — ⅝ „	1
Chisels — firmer, coachmakers — ⅜ „	1
Chisels — hand, cold, ¾ inch × 8 inches	2
Chisels — mortice, ¼-inch	1
Chisels — rivet head	1
Compasses, wing, 7-inch	1 pairs
Dividers, spring, 6-inch	1
Drifts, steel, round — 5/16-inch	1
Drifts, steel, round — 7/16 „	1
Drifts, steel, round — 9/16 „	1
Drifts, steel, round — 11/16 „	1
Drifts, steel, round — 13/16 „	1
Drivers, screw, G.S. — 14-inch	1
Drivers, screw, G.S. — 6 „	1
Files — bastard — flat, 14-inch	2
Files — bastard — half-round, 14-inch	2
Files — bastard — round, 10-inch	2
Files — bastard — round, 6 „	2
Files — bastard — three-square, 14 „	2
Files — saw, three-square — hand, 5½-inch	4
Files — saw, three-square — tenon, 4 „	4
Gauges — carpenters — marking	1
Gauges — carpenters — mortice	1
Gauges — saddletreemakers	1 sets
Gimlets, common — (3/16-inch, 2) (¼ „ 1)	3
Gouges — firmer — 1-inch	1
Gouges — firmer — ¾ „	1
Gouges — firmer — ½ „	1
Gouges — pecking, 1-inch	1
Hammers — fitters — 32-oz.	1
Hammers — fitters — 16 „	2
Hammers — fitters — 8 „	1
Hammers — riveting, 24 „	1
Hammers — smiths, sledge, 10-lb.	1
Hammers — screw	1
Handles, file — middling	2
Handles, file — small	1
Hatchets, hand, 3-lb.	1
Holders, rivet head, small	1

Digitized by Google

Chest, Tool, Filled, No. 3E—*continued.*

Articles.	No.
Knives, drawing, carpenters	1
Lines, carpenters	1
Mallets, carpenters	1
Pencils, carpenters	6
Pincers, carpenters (pairs)	1
Planes { jack, double iron	1
plough	1
rabbet, skew	1
smoothing, G.S.	1
Plates, screw, 10 taps, 20-hole	1
Pots, glue, 1-pint	1
Punches { carpenters, small	1
centre, 4½-inch	1
Rasps, coarse, half-round, 12-inch	1
Reels, carpenters line	1
Rods, smiths, iron	2
Rules, saddletreemakers	1
Saws { compass	1
cutting metal, 10-inch	1
„ „ Blades, 10-inch, spare	1
dovetail, brass back	1
hand, 24-inch	1
tenon, 14-inch	1
Screws, thumb	1
Scribers	1
Sets, saw, hand	1
Shaves, spoke { 3¼-inch	1
2½ „	1
Snaps, riveting { 1⅝ „	1
1¼ „	1
1⅛ „	1
1 „	1
⅞ „	1
¾ „	1
⅝ „	1
½ „	1
Squares, carpenters, 9-inch	1
Stocks, drill, bevel wheel	1
Stones, oil { carpenters	1
smiths	1
Tongs, wheeler-fitters (pairs)	1
Vices, hand, 16-oz.	1
Wrenches, tap small	1

Digitized by Google

Chest, Tool, filled, No. 3E—*continued.*

Articles.								No.
				Vocabulary Section IV.				
Chalk, white (for line, carpenters) ...	....	....	....	lb.				¼
The undermentioned are not carried in the Chest, and will be separately demanded, charged, and accounted for.								
Chests, stocks and dies, Whitworth thread, 1-inch to ⅜-inch, filled								1
(Detail of Stocks and Dies.)								
Chests, stocks and dies, Whitworth thread.[1]	Dies	1-inch	....	....	....	sets		1
		⅞ ,,	....	....	....	....		1
		¾ ,,	....	....	....	....		1
		⅝ ,,	....	....	....	....		1
		½ ,,	....	....	....	....		1
		7/16 ,,	....	....	....	....		1
		⅜ ,,	....	....	....	....		1
	Spanners	⅞-inch	....	....	....	....		1
		⅜ ,,	....	....	....	....		1
	Stocks	D.	....	....	....	....		1
		C.	....	....	....	....		1
	Taps	1 inch	plug	....	....	....		1
			1st turn	....	....	....		1
			2nd ,,	....	....	....		1
		⅞ ,,	plug	....	....	....		1
			1st turn	....	....	....		1
			2nd ,,	....	....	....		1
		¾ ,,	plug	....	....	....		1
			1st turn	....	....	....		1
			2nd ,,	....	....	....		1
		⅝ ,,	plug	....	....	....		1
			1st turn	....	....	....		1
			2nd ,,	....	....	....		1
		½ ,,	plug	....	....	....		1
			1st turn	....	....	....		1
			2nd ,,	....	....	....		1
		7/16 inch	plug	....	....	....		1
			1st turn	....	....	....		1
			2nd ,,	....	....	....		1
		⅜ ,,	plug	....	....	....		1
			1st turn	....	....	....		1
			2nd ,,	....	....	....		1
	Wrenches	I.	....	....	....	....		1
		H.	....	....	....	....		1
		F.	....	....	....	....		1
		D.	....	....	....	....		1

Digitized by Google

CHEST, TOOL, FILLED No. 3G.
(Wheelers Tools, R.A. Field, for Wood Carriages.)

Articles.	No.
Vocabulary Section III.	
Chests, tool, empty, No. 3	1
Adapters, brace	1
Adzes, carpenters { Heads	1
Adzes, carpenters { Handles	1
Augers { shell { 1¼-inch	1
Augers { shell { 1 1/16 "	1
Augers { shell { 1 "	1
Augers { shell { 15/16 "	1
Augers { shell { 7/8 "	1
Augers { shell { 1/2 "	1
Augers { Handles { 16-inch	1
Augers { Handles { 13½ "	1
Augers { Handles { 12 "	1
Awls { Blades, brad	12
Awls { Handles, brad { large	2
Awls { Handles, brad { small	2
Bags, tool, carpenters	1
Bevels, steel blade, 12-inch	1
Braces { carpenters, Bits (set of 24)*	1 sets
Braces { smiths	1
Braces { " Bits { countersink, rose	1
Braces { " Bits { rimer { half round	1
Braces { " Bits { rimer { square	1
Braces { rachet, 9-inch	1
Braces { " " Drills (Nos. 1 to 11)	11
Brushes, paint, sash tool, No. 6	1
Callipers, 6-inch	1 pairs
Cans, oil, lubricating, G. S.	1
Chisels { firmer, coachmakers { 1½-inch	1
Chisels { firmer, coachmakers { 1¼ "	1
Chisels { firmer, coachmakers { 1 "	1
Chisels { firmer, coachmakers { ¾ "	1
Chisels { firmer, coachmakers { ½ "	1
Chisels { firmer, coachmakers { ⅜ "	1
Chisels { hand, cold, ⅜-inch × 8-inch	2
Chisels { mortice, ¼-inch	1
Compasses, wing, 7-inch	1 pairs
Dividers, spring, 6-inch	1
Drivers, screw, G.S. { 14-inch	1
Drivers, screw, G.S. { 6 "	1

* Detail of bits:—

Braces, carpenters, Bits.	centre, 1⅛, 1, 7/8, ¾, ⅝, ½, and ⅜-inch	7
	countersink { flat	1
	countersink { rose	1
	dowling sash	1
	gouge, 7/16, ⅜, 5/16, 1/4, 3/16, 1/8, and ½-inch	6
	nose, ⅜, 5/16, ¼, 3/16, and 1/8-inch	5
	rimer, square	1
	screwdriver	1
	taper	1
		24

Digitized by Google

Chest, Tool, Filled, No. 3G—*continued.*

Articles.	No.
Files, bastard, flat, 14-inch	1
Files, bastard, half-round, 14-inch	1
Files, round, 10-inch	1
Files, round, 6 ,,	1
Files, saw, three-square, hand, 5½-inch	4
Files, saw, three-square, tenon, 4 ,,	4
Gauges, carpenters, marking	1
Gauges, carpenters, mortice	1
Gimlets, common, (3/16-inch, 2)	3
Gimlets, common, (¼ ,, 1)	
Gouges, firmer, 1-inch	1
Gouges, firmer, ¾ ,,	1
Gouges, firmer, ½ ,,	1
Gouges, pecking 1 ,,	1
Hammers, fitters, 16-oz.	1
Hammers, fitters, 8 ,,	1
Hammers, riveting, 24 ,,	1
Hammers, screw	1
Handles, file, middling	2
Handles, file, small	1
Hatchets, hand, 3-lb.	1
Knives, drawing, carpenters	1
Lines, carpenters	1
Mallets, carpenters	1
Pencils, carpenters	6
Pincers, carpenters	1 pairs
Planes, jack, double iron	1
Planes, plough	1
Planes, rabbet, skew	1
Planes, smoothing, G. S.	1
Plates, screw. 10 taps, 20 hole	1
Pots, glue, 1-pint	1
Punches, carpenters, small	1
Punches, centre, 4½-inch	1
Rasps, coarse, half-round, 12-inch	1
Reels, carpenters line	1
Rules, saddletreemakers	1
Saws, compass	1
Saws, dovetail, brass back	1
Saws, hand, 24-inch	1
Saws, tenon, 14 ,,	1
Screws, thumb	1
Scribers	1
Sets, saw, hand	1
Shaves, spoke, 3½-inch	1
Shaves, spoke, 2½ ,,	1
Squares, carpenters, 9-inch	1
Stocks, drill, bevel wheel	1
Stones, oil, carpenters	1
Vices, hand, 16-oz.	1
Wrenches, tap, small	1
Vocabulary Section IV.	
Chalk, white (for line, carpenters) lb.	¼

The undermentioned are not carried in the Chest, and will be separately demanded, charged, and accounted for.

Chests, stocks and dies, Whitworth thread, 1-inch to ⅜-inch, filled	1

Digitized by Google

BAG, VICE, ORDNANCE ARTIFICERS.

(Containing tools for the repair of Position-Finding Instruments.)

Referred to in Paragraph 32A.

Articles.	No.
Bags, vice, ordnance artificers	1
Bits, soldering .... lbs.	1
Brush { plate, 5-row, bone handle	2
Brush { watchmakers	2
Burnishers, flat { oval	1
Burnishers, flat { triangular	1
Callipers, 5-in., inside and outside .... pairs	1
Compound, Chatterton's, telegraph jointer sticks	1
Dividers, spring, 6-inch .... pairs	1
Drills { hand, millers falls	1
Drills { morse, twist .... sets	1
Drivers, screw { G.S. { 6-inch	1
Drivers, screw { G.S. { 4 „	1
Drivers, screw { armourers, small	1
Drivers, screw { watchmaker (set of 4 in a box).... .... sets	1
Eyeglass, watchmakers	1
Ferrules, screw, for pivot turn (sets of 4).... .... sets	1
Files { bastard, safe edge, 8-inch	1
Files { rough, round, 6-inch	1
Files { second cut { half-round, 6-inch	1
Files { second cut { one safe side, square, taper, 8-inch....	1
Files { second cut { safe edge, 6-inch	1
Files { dead smooth { flat, 6-inch	1
Files { dead smooth { half-round, 4-inch	1
Files { dead smooth { safe edge, 4-inch	1
Files { half-round, 6-inch	1
Files { pillar, 3-inch	1
Files { round { 6-inch	1
Files { round { 3 „	1
Files { smooth { safe edge { 6-inch	1
Files { smooth { safe edge { 3 „	1
Files { smooth { square { 6-inch	1
Files { smooth { square { 4 „	1
Files { smooth { 3-square, 3-inch	1
Files { pivotting, 6 varieties .... sets	1
Graves, turners { $\frac{5}{32}$-inch	1
Graves, turners { $\frac{3}{32}$-inch	1
Hammers, fitters, 8 ozs.	1
Knives, clasp, with marline spike	1

Digitized by Google

Bag, Vice, Ordnance Artificers—*continued.*

Articles.	No.
Lamp, spirit, telegraph equipment, round chamber	1
Leathers, chamois	1
Nippers, end cutting, G.S. { 6-inch	1
4 „	1
Pegwood, telegraph mechanics .... bdls.	1
Pincers, carpenters, 8½-inch	1
Pipe-blow	1
Pivot turns	1
Plate, screw, with taps, British Association, standard dimensions	1
Plate, screw, 8 taps, 27 holes	1
Pliers { flat nose	1
round nose	1
side cutting, 7-inch	1
Punch, centre, 4-inch, fine	1
Rule, ordnance artificers, 1-foot	1
Saw { cutting metal, 6-inch	1
keyhole { blade	1
pad or handle	1
Scissors, laboratory, 7-inch, small	1
Solder { silver, telegraph mechanics .... ozs.	2
tinmans .... sticks	1
Spanners, McMahon's, 9-inch	1
Square, fitters, 4-inch	1
Stone, oil, telegraph mechanics	1
Tips, oil, with screw cap	1
Tongs, watchmakers, bull-nose	1
Tools, electricians (set in case)	1
Tweezers, watchmakers, hollow pattern	1
Vice { hand, 8-oz.	1
pin	1

Digitized by Google

CHEST, TOOL, FILLED, No. 3H.

(Watchmakers, for repair to Position-Finding Instruments, and for use of Ordnance Artificers specially appointed for this duty.)

Articles.	No.
Awls, blades, brad, carpenters (6 to a set) .... sets	2
Batteries, Le Clanché, testing, 6-cell (in box)	1
Bits, soldering, 1½ lbs.	1
Block, scribing, 4-inch, telegraph, mechanics	1
Borax, ... lbs.	½
Bottles — 2 oz., glass, with ground stopper, narrow mouth ...	2
Bottles — 4 „ „ „ „ wide mouth....	2
Bottles — gutta-percha, for muriatic acid	1
Bouchon's — clock pieces for bushing pivot holes, assorted sizes	12
Bouchon's — timepiece, for bushing pivot holes „ „	100
Boxes — resin	1
Boxes — oilstone, dust	1
Boxes — polishing, watchmakers	1
Boxes — borax	1
Braces — carpenters....	1
Braces — bits (set of 24) .... sets	1
Brass, sheet — 10 standard wire gauge .... lbs.	2
Brass, sheet — 14 „ „ „ .... „	2
Brass, sheet — 16 „ „ „ .... „	1
Brass, sheet — 20 „ „ „ .... „	1
Broaches — English pivot, assorted sizes	24
Broaches — telegraph, mechanics (60 to a set) .... sets	1
Brushes, camel-hair — 1½-inch	1
Brushes, camel-hair — 1 „	1
Brushes, camel-hair — ½ „	1
Cases — boxwood, for springs and pins	1
Cases — „ for files	1
Callipers, 4-inch — inside	1
Callipers, 4-inch — outside	1
Cans, spirits of wine, 1½ pint, flat, with screw stopper	1
Card, scratch, on cloth, 4¾ inches wide .... feet	1
Carriers, steel, for throw of pivot turns .... sets	1
Chisels — cold, flat 8-inch × ¾-inch	1
Chisels — cold, flat 4½ „ × ½ „	1
Chisels — wood, firmer ⅛-inch	1
Chisels — wood, firmer ¼ „	1
Chisels — wood, firmer ½ „	1
Chisels — wood, firmer ¾ „	1
Chisels — wood, firmer 1 „	1
Chisels — wood, socket, ¼-inch	1

Digitized by Google

Chest, Tool, Filled, No. 3H—*continued.*

Articles.	No.
Cloth, emery { O .... quires	¼
F .... „	¼
Flour .... „	¼
Cloths, sponge, cotton .... doz.	1
Coils, resistance, 1,000 ohms, for Wheatstone Bridge	1
Compasses, magnetic, pocket, with needle bar	1
Compound, Chatterton's .... lbs.	2
Counters, bone, for labelling wires	24
Cups, oil, boxwood, high pattern	1
Drills, small, and stocks for watchmakers, complete in box	1
Drivers, screw, watchmakers { ¼-inch	1
3/16 „	1
⅛ „	1
Dust, oilstone .... lbs.	½
Ebonite { 1-inch, square bar .... „	1
1 „ round .... „	1
¼ „ sheet .... „	1
1/16 „ „ .... „	½
Elderpith, telegraph, mechanics .... bundles	3
Endstones, garnet, flat and convex (large sizes only)	144
Files bastard { half-round, 12-inch	1
safe edge { 14 „	1
8 „	1
4 „	1
round, 10-inch	1
square „	1
saw, 3-square, hand, 6-inch	2
rough { flat, 18-inch	1
round, 6-inch	2
second cut { fish back, 12-inch	1
half-round { 10-inch	1
6 „	1
one safe side, square, taper, 8-inch	1
safe edge { 8-inch	2
6 „	1
dead smooth { flat { 12-inch	1
6 „	2
half-round { 6-inch	1
4 „	1
safe edge { 6 „	1
4 „	2
smooth { fish back, taper, 10 „	1
flat, 8-inch	2

Digitized by Google

Chest, Tool, Filled, No. 3H—*continued.*

Articles.				No.
Files	smooth	half-round	10-inch	1
			6 „	2
			3 „	2
		pillar	6 „	1
			3 „	2
		round	6 „	2
			3 „	2
		safe edge	10 „	1
			6 „	2
			3 „	2
		square	6 „	2
			4 „	2
		3-square, 3-inch		2
	Geneva	round		2
		square		2
		3 square		2
		cylinder notch		2
		dovetail		2
		ratchet		2
		screw-head or slitting (assorted sizes)		4
Galvanometers		astatic, 1,000 ohms, with magnet, in leather case.		1
		detector, 3-coil		1
		„ „ leather case for, with strap		1
Gauges, standard wire				1
Gimlets, screw (12 sizes to a set)			sets	1
Glass, covering and tray				1
Gouges	firmer	$\frac{1}{8}$-inch		1
		$\frac{1}{4}$ „		1
		$\frac{3}{8}$ „		1
		$\frac{1}{2}$ „		1
	flat firmer	$\frac{3}{8}$ „		1
		$\frac{3}{4}$ „		1
Gravers, turners		$\frac{9}{32}$-inch		1
		$\frac{7}{32}$ „		1
Grindstone, 8-inch, in cast-iron frame				1
Hammer		watchmakers		1
		fitters, 16-oz.		1
Handles		awl, brad large		6
		awl, brad small		6
		file large		3
		file middling		12
		file small		12
		graver and chaser, $4\frac{1}{2}$-inch		12
		broach, $3\frac{1}{2}$-inch		12

Digitized by Google

Chest, Tool, Filled, No. 3H—*continued.*

Articles.	No.
Holders, milling tool, adjustable	1
Jars, essence	1
Knives, shoemakers, telegraph jointers	1
Lacquers { plate, gold, for brass, in half-pint bottles .... bottles	1
Lacquers { white, for silvered work .... pint	1
Ladles, melting, half-pint	1
Leathers, chamois	3
Mallets, tinmans, boxwood	1
Methylated Spirits.... .... gals.	1
Oil, Kelly's { watch .... small bottle	1
Oil, Kelly's { clock .... „ „	1
Paraffin { black .... pints	1
Paraffin { white .... „	1
Pegwood, telegraph mechanics .... bundles	6
Planes, smoothing, G.S., 2⅛-inch double iron	1
Plates { draw, for spring wire, telegraph mechanics	1
Plates { surface, 10″ × 4″....	1
Platinum, bichloride, for bronzing (15 grains in a tube) .. tubes	3
Pliers, watchmakers { 5-inch	1
Pliers, watchmakers { 4-inch	1
Pots, fire, telegraph mechanics	1
Powder, emery flour .... lbs.	½
Rags, fine cotton .... „	2
Rasps { coarse { flat, 8-inch	1
Rasps { coarse { half-round, 8-inch	1
Rasps { fine { flat, 6-inch	1
Rasps { fine { half-round, 6-inch	1
Resin, finest .... lbs.	½
Rimers, milling { flat (4 sizes) .... sets	1
Rimers, milling { hollow (4 sizes) .... „	1
Rimers, milling { round (4 sizes) .... „	1
Saws { dovetail { brass back, 9-inch blade	1
Saws { dovetail { cutting metal { 6-inch blade	1
Saws { dovetail { cutting metal { blades (spare)	2
Saws { hand, 26-inch, G.S.....	1
Saws { key-hole { blades	3
Saws { key-hole { pad or handle	1
Screws { English and Geneva watch (assorted sizes) ....of each	144
Screws { jewel { flat heads	144
Screws { jewel { round heads	144
Sets, saw, hand, with notched screwdriver at end....	1
Shaves, spoke, 2½-inch	1
Shears, strip, 8-inch, telegraph mechanics	1

Digitized by Google

Chest, Tool, Filled, No. 3H—*continued.*

Articles.		No.
Shellac, orange	lbs.	¼
Silver, German sheet 15 Standard wire gauge	,,	1
Silver, German sheet 19 ,, ,, ,,	,,	1
Silver, German sheet 22 ,, ,, ,,	,,	1
Solder, tinmans, in thin bars	,,	1
Solution, soldering	pint	1
Squares, carpenters, 9-inch		1
Stands, wood, for Morse twist drills	sets	1*
Stamps, steel, for metal ½-inch, 0 to 8	set	1
Stamps, steel, for metal ⅛-inch, letters	,,	1
Steel, rod, stubs, bright, of sizes	lbs.	1
Sticks, buff, fine		6
Stocks, screw, Whitworth, small, with dies, plug, and taper taps, telegraph mechanics		1
Stones, oil, slip, Arkansas, armourers		2
Straight Edge, steel, 2 feet, Ordnance artificers		1
Throws, lathe, complete, with wheel, telegraph mechanics		1
Tin, grain	lbs.	1
Tongs, watchmakers, wide nose		1
Tweezers, telegraph mechanics		1
Vice, bench, parallel, 12 lbs., traversing		1
Vice, screw-pin for holding broaches, American pattern		1
Wick, common or ball, for spirit lamp	lbs.	½
Wire German silver 20 B.W.G.	,,	½
Wire German silver 30 ,,	,,	½
Wire Brass 1 Standard wire gauge	,,	1
Wire ,, 7 ,, ,, ,,	,,	1
Wire ,, 12 ,, ,, ,,	,,	1
Wire ,, 14 ,, ,, ,,	,,	½
Wire ,, 20 ,, ,, ,,	,,	½
Wire Platinum, 11 B.W.G., telegraph mechanics	ozs.	1

* The drills are carried in the Bag, Vice, Ordnance Artificers.

Digitized by Google

List of Stores for Instructors in Position Finding.

Articles.		No.
Instruments, drawing, R.E.		1
Boards, boards Antiquarian 55-inch by 33-inch		1
T-square, 52-inch		1
Protractors, brass, circular 8-inch		1
Scales, mathematical, Marquois	sets	1
Pins, drawing, ¼-inch, steel, brass heads		20
STATICNERY.		
Paper — cartridge	quires	5
Paper — drawing, antiquarian	„	1
Pencils — blacklead, HHH		6
Pencils — „ HB		6
Pencils — blue		3
Pencils — red		3
ELECTRICAL INSTRUMENTS.		
Coils, resistance 10,000 ohms, in wood box, for Wheatstone's bridge		1
Galvanometer, N.P. post office, astatic		1
Holden's cell tester		1
Tubes, electric, No. 10		100
Gutta percha, covered wire "B" 2 yards		100
Test table wire		100
TOOLS		
Drivers, screw — G.S. 12-inch		1
Drivers, screw — G.S. 6 „		2
Drivers, screw — armourer's small		1
Drivers, screw — watchmaker's ¼ end		1
Drivers, screw — telegraph, mechanics		1
Files — smooth 3-squre 4-inch		2
Files — saw, 3-square, hand 6-inch		3
Files — bastard 3-square 8-inch		1
Pliers, side cutting, 7-inch, bright		1
Bit, soldering, 1½-lb.		1
Solder, tinmans, in thin bars	lbs.	2
Resin	„	1
Compound, Chatterton's telegraph jointers	„	1
Gutta percha, 2 feet by ⅛ inch, sheet for joints	„	1
Cloth, emery, coarse and middling	quires	1
Lamps, spirit, telegraph, mechanics		1
Tip, oil, with screw cap, mechanics		1
Funnel, buttery cell, ebonite		1
Sextant, pocket, in leather case with sling		1
ELECTRICAL BOOKS—STATIONERY.		
Notes on Electricity for Garrison Artillery		6
Electricity in the Service of Man		1

Digitized by Google

APPENDIX XI.

SPANNERS AND IMPLEMENTS, SPECIAL, FOR B.L. MOUNTINGS.

No.	Description.	Garrison.	12-in.	10-in.				9·2 in.				8-in.	6-in.						5-in.	4-in.	Proportion.	
				Disappearing		Barbette.		Disappearing		Barbette			Disappearing.						Siege, 6-ft. parapet.	Siege, 6-ft. parapet.	Per Mounting.	Per Work.
				Mark I.	Mark II.	Mark I.	Mark II.	Mark III.	Mark I.	Mark II.	Mark I.	Mark II.	Barbette.	Mark I.	Mark II and II*	Mark III.	Mark IV.	Vavasseur "C" Pivot.	Barbette C.P.				
	SPANNERS, HYDRAULIC BUFFER.																					
No. 1.	Cap and gland...	...	...	...	...	...	...	...	...	...	...	...	...	...	...	...	...	...	1	1	1	...
,, 6.	Plug and cock...	...	...	...	...	...	...	...	...	...	...	...	...	...	...	...	...	...	1	1	1	...
,, 22.	Cap	1	...	...	...	...	...	...	...	...	...	...	...	...	...	...	...	...	...	...	1	...
,, 23.	Gland, outer (with plate) ...	1	...	...	...	...	...	...	...	...	...	...	...	...	...	...	...	...	...	...	1	...
,, 24.	Gland, inner	1	...	...	...	...	...	...	...	...	...	...	...	...	...	...	...	...	...	...	1	...
,, 25.	Nut, piston rod	1	...	...	...	...	...	...	...	...	...	...	...	...	...	...	...	...	...	...	1	...
,, 26.	Union pipe connecting, and plug, filling hole	1	...	...	...	...	...	...	...	...	...	...	...	...	...	...	...	...	...	...	1	...
,, 27.	Coupling, and nut joint pipe connecting	1	...	...	...	...	...	...	...	...	...	...	...	...	...	...	...	...	1	...	...	...
,, 34.	Gland, outer	...	...	...	...	1	...	...	...	1	...	...	...	...	...	...	...	...	...	...	1	...
,, 35.	Gland, inner, and plug ...	...	...	...	...	1	...	...	...	1	...	...	...	...	...	...	...	...	...	...	1	...
,, 36.	Bolt, connecting piston rod	...	...	...	...	1	...	...	...	1	...	...	...	...	...	...	...	...	...	...	1	...
,, 37.	Ring, securing leather packing	...	...	...	...	1	...	...	...	1	...	...	...	...	...	...	...	...	...	...	1	...
,, 38.	Cap, rear (with key)... ...	...	...	...	...	...	1	...	...	...	1	...	...	...	...	...	...	...	...	...	...	1
,, 39.	Gland and pipe connecting	...	...	...	...	...	1	...	...	...	1	...	...	...	...	...	...	...	...	...	...	1
,, 40.	Nuts, pipe connecting and filling	...	...	...	...	...	1	...	...	...	1	...	...	...	...	...	...	...	...	...	...	1
,, 41.	Plug, filling and screw securing	...	...	...	...	...	1	...	...	...	1	...	...	...	...	...	...	...	...	...	...	1

Digitized by Google

Spanners and Implements, Special, for B.L. Mountings—*continued.*

Description.		12-in.	10-in.			9·2-in.				8-in.	6-in.						5-in.	4-in.	Proportion.	
			Disappearing.		Barbette.	Disappearing		Barbette			Disappearing.									
		Garrison.	Mark I.	Mark II.	Mark I.	Mark I.	Mark II.	Mark I.	Mark II.	Barbette.	Mark I.	Mark II and II*	Mark III.	Mark IV.	"C" Yarasseur Pivot.	Barbette C.P.	Siege, 6-ft. parapet.	Siege, 6-ft. parapet.	Per Mounting.	Per Work.
No. 46. Cap, rear		...	...	...	...	...	...	...	...	...	...	...	...	...	...	...	...	...	...	1
,, 47. Gland, inner		...	...	...	...	...	...	...	...	...	...	...	...	...	...	...	...	...	...	1
,, 48. Gland, outer		...	...	...	...	...	...	...	...	...	...	...	...	...	...	...	...	...	...	1
,, 49. Plug, filling		...	...	...	1	...	...	...	...	...	...	...	...	...	...	...	...	...	...	1
,, 51. Cap and gland... ...		...	...	...	...	...	...	...	...	...	...	...	...	...	...	1	...	...	...	1
,, 52. Ring, securing leather packing		...	...	...	...	...	...	...	...	...	...	...	...	...	1	...	...	...	...	1
,, 53. Gland		...	...	...	...	...	...	...	...	...	...	...	...	...	1	...	...	...	...	1
,, 54. Plug, cylinder... ...		...	...	...	...	...	...	...	...	...	...	...	...	...	1	...	...	...	...	1
,, 55. Nuts, piston rod, thin		...	...	...	...	...	...	...	...	...	...	...	...	...	1	...	...	...	...	1
,, 56. Plugs, filling and emptying, and union pipe connecting		...	...	...	...	...	...	...	...	...	...	...	...	...	...	...	...	...	...	1
SPANNERS.																				
Air-plugs, gland, and discharge pipe, pump running back		...	...	...	1*	...	...	1*	...	...	...	...	...	...	...	...	...	...	1*	...
Axles { roller, carriage		...	...	...	1†	...	...	1†	...	...	...	...	...	...	...	...	...	...	1†	1†
Axles { truck, slide		...	...	...	1†	...	...	1†	...	...	...	...	...	...	...	...	...	...	1†	1†
Bolt, counterweight		...	...	...	...	...	1†	...	1†	...	...	...	...	...	...	...	...	...	1†	1†
Bolts, cover cylinder { and bolts, buffer, (with tommy) jump (with tommy)		...	1†	...	...	...	1†	...	...	...	...	...	...	...	...	...	...	...	...	1†
Bolt, fixing bracket, guide rear, gear, retaining		...	...	...	1†	...	...	1†	...	...	...	...	...	...	...	...	...	...	1†	...

Digitized by Google

| | | |

Spanners and Implements, Special, for B.L. Mountings—*continued.*

Description.	Garrison.	12-in.	10-in.				9·2-in.				6-in.							5-in.	4-in.	Proportion.	
			Disappearing		Barbette.		Disappearing		Barbette		Disappearing.				Vavasseur ,, "O" Pivot.	Barbette C.P.		Siege, 6-ft. parapet.	Siege, 6-ft. parapet.	Per Mounting.	Per Work.
			Mark I.	Mark II.	Mark I.	Mark III.	Mark I.	Mark II	Mark I.	Mark II	Mark I.	Mark II* and II	Mark III.	Mark IV.							
Rings { gland, cylinder recoil			1†				1†					1*								1†	
packing, pump lowering			1*				1*					1*									1
Scating { recoil valve, cylinder recoil																					
valve and plug (with tommy), pump, gear, pivot, hydraulic					1*	1*			1*												1*
Shaft, pinion, gear, elevating					1*		1*		1*												1*
Spindle, spring, gear, retaining and ram controlling hydraulic buffer								1*													1
Studs, gland cylinder, jump				1*						1*											
Union pipe, connecting buffer and union pipe suction pump, gear, pivot, hydraulic						1															1*
Unions, pipe, { large				1*				1*		1*											1*
copper { small				1*		1				1*											1*
Union pipe { delivery					1*																1*
delivery, pump, gear, { large					1*																1*
pivot, hydraulic { small					1*																1*
tank, gear, pivot, hydraulic																					1
filling, cylinder recoil							1*														1*
Valve { raising, cylinder recoil, and nuts adjusting shaft, 1st			1*				1*														
motion, gear, elevating																					

Digitized by Google

| | | |

Spanners and Implements, Special, for B.L. Mountings—*continued.*

Description.	12-in.	10-in.				9·2-in.				8-in.	6-in.							5-in.	4-in.	Proportion.	
	Garrison.	Disappearing		Barbette.		Disappearing		Barbette		Barbette.	Disappearing.							Siege, 6-ft. parapet.	Siege, 6-ft. parapet.	Per Mounting.	Per Work.
		Mark I.	Mark II.	Mark I.	Mark II.	Mark III.	Mark I.	Mark II.	Mark I.	Mark II.		Mark I.	Mark II and II*.	Mark III.	Mark IV.	Vavasseur ,, O ,, Pivot.	Barbette C.P.				
TOMMIES.																					1*
Adjusting pins, frame supporting, rear	...	...	...	...	1*	...	...	...	...	1*	...	...	...	...	...	...	...	...	...	...	1*
Bolt, clamping elevator ...	...	...	1*	...	...	...	1*	...	...	1*	...	...	...	...	...	...	...	...	...	...	1*
Spanner, racer, small ...	...	...	...	...	1*	1*	...	...	...	...	...	...	...	...	...	...	...	...	...	...	
WRENCHES.																					
Buckets, small, for pumps ...	...	...	1*	...	...	...	...	1*	...	...	...	...	1	...	...	...	...	...	1	...	1*
Pivot { No. 5. Hand, elevating (with tommy	...	...	...	...	...	...	...	...	...	...	...	...	...	1	...	...	...	...	...	...	1
Pivot { No. 6. Hand elevating ...	...	...	...	1	...	...	1	...	...	...	...	...	...	...	...	1	...	...	...	...	1
,, 7. ,, ,, ...	...	...	...	...	...	...	...	...	...	...	...	...	...	...	...	...	1	...	...	...	1
,, 8. ,, ,, (with keep screw spanner) ...	...	1	...	...	...	...	1	...	...	...	...	...	...	...	...	...	...	...	...	...	1

* Interchangeable.

Digitized by Google

II.—DETAILS OF EQUIPMENT.

CONTENTS.

	PAGE
1. ARMAMENTS—	
B.L. 12-in. to 8-in. Guns	722
B.L. 6-in. to 4-in. Guns	729
R.M.L. 17·72-in. and 16-in. Guns	735
R.M.L. 12·5-in. to 7-in. Guns	742
R.M.L. 6·6-in. to 40-pr. Guns	757
R.B.L. 7-in. 40-pr. and 20-pr. Guns	766
R.M.L. 8-in. to 6·3-in. Howitzers	774
S.B. Cast-iron Guns, Howitzers and Carronades	780
13, 10 and 8-inch Cast-iron Mortars	788
5½ and 4⅘-inch Bronze Mortars	791
4·7-inch Q.F. Guns	793
Hotchkiss Q.F. 6-pr. Gun, Mark I., on Elastic Stand	796
Hotchkiss Q.F. 6-pr. Gun, Mark II., on Recoil Cone and Embrasure Mountings	797
Nordenfelt Q.F. 6-pr. Gun, Mark III., on Recoil Cone and Embrasure Mountings	800
Hotchkiss Q.F. 3-pr. Gun, Mark II., on Travelling Carriages	802
Nordenfelt, Q.F. 3-pr. Gun, on Travelling Carriage	803
Tools, Ordnance, for Examining Quick Firing Ordnance	803*a*
Ammunition, &c., for Hotchkiss and Nordenfelt Quick-firing Ordnance	804
Machine Guns	805
Movable Armaments	809
Siege Train Companies	830
Magazine Stores	831
Army Books and Forms for Armaments	838
2. GENERAL LISTS OF COMPONENT AND SPARE PARTS	839
3. STAFF, AND SERVICE AND DEPOT BATTERIES	1023
4. ROYAL ARTILLERY, REGIMENTAL AND SPECIAL DISTRICT STAFF, SCHOOL OF GUNNERY, R.A., STAFF CLERKS, R.A. BAND, ROYAL MALTA ARTILLERY, AND ASIATIC ARTILLERY	1047

Digitized by Google

1.—ARMAMENTS.

Referred to in Paragraph 48.

EQUIPMENT OF B.L. 12-IN., 10-IN., 9·2-IN., AND 8-IN. GUNS.

NOTE.—Articles for 8-inch Mark VII Guns against which "O" appears in Remarks column will not be continued after present supply is exhausted.

TABLE 1.	Proportions.	Remarks.
Vocabulary Section II. (1)		
Lamps, tracing	1 per gun...	For night firing.
Vocabulary Section II. (2).		
Carts, shot	1 per district.	
Drugs, gun, 25 tons	1 ,, ...	For 9·2-inch and 8-inch.
Vocabulary Section III.		
Chests, tool, empty, recoppering guns, B.L. 8-inch, Mark VII (with tools shown in Appendix X, p. 706).	As authorised by paragraph 174.	For guns with cup obturator.
Chests, tool, filled — No. 3 D	As authorised by paragraph 174.	For repair of wrought iron carriages and slides.
,, 11 A	1 per work.	
Bars, crow, 6-feet	1 per work	For general use.
Cans, oil, lubricating, G.S.	1 per gun...	For use of ordnance artificers.
Drivers, screw, G.S., 24-inch ...	1 ,, ...	For general use.
Forges, field, R.A., Mark IV. ...	As authorised. *See* paragraph 174.	For use of ordnance artificers.
Hammers, claw, 28-oz.	2 per battery	For general use.
Spanners, McMahon, 15 inch ...	1 per gun...	For tightening nuts, &c.
Spanners, ordnance artificers, double-ended — $1\frac{1}{2}$-in. and $1\frac{3}{8}$-in.; $1\frac{1}{4}$,, $1\frac{1}{8}$,,; 1 ,, $\frac{7}{8}$,,; $\frac{3}{4}$,, $\frac{5}{8}$,,; $\frac{5}{8}$,, $\frac{9}{16}$,,	1 set per work ...	For adjusting and tightening up bolts and nuts.
TOOLS, ORDNANCE.		
Tools, examining, painting and lacquering rifled ordnance ... sets	1 per district	For detail of tools, *see* Table *A*, pages 616 to 619.
Vocabulary Section IV.		
Brushes, water, carriage ...	2 per gun...	For cleaning projectiles, &c.

Digitized by Google

Equipment of B.L. 12-in., 10-in., 9·2-in., and 8-in. Guns—*continued.*

TABLE 1—*continued.*	Proportions.	Remarks.
Candles, magazine* ... ... lbs.	1 per fighting lantern.	
Canvas ... ...yards	2½ per gun	Annual allowance. For use with Piasaba brush for cleaning bores.
Chalk, white ... ... lbs.	2 per gun	Annual supply.
Glycerine ... ... ,,	1 per gauge, dead weight testing	For lubricating gauge.
Methylated spirits .. galls.	As required	For H.P. cylinders.
Oil, mineral ... . ,,	As required	For hydraulic buffers or H.P. cylinders.
Soda, carbonate, dry ... ... lbs.	As required	For H.P. cylinders.
Vocabulary Section V. (1.)		
Bands, elevating	1 per gun...	For guns with removable elevating bands.§
Barrows — powder	1 per work	For moving powder or filled cartridges.
Barrows — projectile — No. 1 ...	1 per B.L. 12-inch gun	For service at the guns.
Barrows — projectile — ,, 5 ...	1 per B.L. 10-inch and 9·2-inch guns	Only 1 barrow, either No. 5 or No. 11, for each 9·2-inch gun.
Barrows — projectile — ,, 11 ...	1 per B.L. 9·2-inch and 8-inch guns	
Bits, vent, 36-inch	1 per gun...	For clearing vent, except for 8-inch Mark VII guns.
Boards, range, fuze scale	1 for every 2 guns of same nature, or where mounted singly 1 per gun.	To be provided locally.†
Boxes — grease, 3 lbs.	1 per gun...	If not fitted to slide.
Boxes — obturating pads	1 per gun...	To contain 3 pads and 3 sets of discs. Not required for 8-inch Mark VII guns.
Boxes — passing, leather	3 per 8 inch Mk. VII gun	For service of cartridges O.
Brushes, piasaba, B.L. — bore ...	1 per work	For cleaning bores.
Brushes, piasaba, B.L. — chamber	1 ,, ...	,, ,, chambers.
Buckets, sponge, garrison	1 per gun	For general use.
Caps, sponge**...	1 per sponge where necessary.	To protect sponge head.
Carriages, garrison — B.L. 12 inch; Barbette, B.L. (10 inch, 9·2-inch, and 8-inch); disappearing B.L. (10-inch and 9·2-inch‡)	1 per gun according to description of mounting approved.	

* Supplied by Army Service Corps.

† The fuze scale is either painted on the board, or printed on paper and attached to the board.

‡ For the liquid at present in use in cylinders for these disappearing garrison carriages the proportions are, for 42 gallons:—

Methylated spirits	28 galls.	Mineral oil	1 gall.
Distilled water	13 ,,	Soda, carbonate ...	1,000 grains.

§ Elevating bands for the earlier issues of B.L. guns are fixtures, and as such are a component of the gun, and not accounted for as a separate store.

** Only to be used for sponges in transit, or where stores are damp.

Digitized by Google

Equipment of B.L. 12-in., 10-in., 9·2-in., and 8-in. Guns—*continued.*

TABLE 1—*continued.*	Proportions.	Remarks.
Clamps, tangent sight { automatic, C ...	2 per gun except 8-inch Mark VII.	
{ special	2 per 8-in. Mark VII gun.	
Clinometers, garrison	1 per 3 guns, or 1 per work.	For measuring angles and ascertaining quadrant elevation.
Covers { breech, B.L.	1 per gun.	
{ carriage, garrison disappearing, and gun, B.L.	1 per 10-in. and 9·2-in. gun on disappearing carriage.	
Extractors { cartridge, B.L. guns	1 to every 3 guns or 1 per work of less than 3 guns.	
{ tube { P	1 per 10-inch Mark I gun	For extracting vent-sealing tubes.
{ tube { P, special ...	1 per 5 guns or less per work, except 8-inch Mark VII	
Filters, hydraulic jack	1 per work	For filling jacks.
Flags, red, 12 feet × 6 feet	1 per practice battery ...	*See* para. 100, and App. IV.
Frames, store, hydraulic jack, G.S.	1 per work or per 4 jacks	For keeping jacks under pressure
Gauges, pressure, dead weight testing	1 per sub-district ...	For disappearing carriages only.
Gyns, triangle, with appurtenances, heavy, tubular, Mark II	1 per sub-district, or 2 if more than 3 works	For mounting and dismounting ordnance.
Handspikes, common, 7 ft. ...	2 per gun...	Not to exceed 12 per work.
Hydro-clinometers	1 per gun on barbette carriage.	Where racers are sufficiently out of level to cause a variation of 10 minutes elevation to the gun at different positions of traverse.
Indicators { pressure, spring, carriage, garrison disappearing	1 per disappearing carriage	
{ range	As authorised	For coast batteries. (Local supply.)
Jacks, lifting, hydraulic, G.S. { 30 tons	2 per gun or 4 per work of more than 2 guns	The 30 ton jacks for 10-in. and 12-in.
{ 20 ,,		The 20 ton jacks for 8-in. and 9·2-inch.
Keys, tampeon, B.L., large	1 per 2 guns or less number	Securing tampeon in gun.
Lamp, electric, telescope	1 per position-finder or depression range-finder where the electric search light is installed.	
Lamps, electric, telescope { battery, Le Clanche, 4 cell*	1 per lamp.	
{ leads, flexible double strand, 2½ yds. (a)*	1 ,, ,,	
{ switch and resistance coil*	1 ,, ,,	
{ wires, connecting, "C. 5," 6 yards*	1 ,, ,,	

* These would not require to be exchanged in the event of a lamp being damaged.

Digitized by Google

Equipment of B.L. 12-in., 10-in., 9·2-in., and 8-in. Guns—*continued.*

TABLE 1—*continued.*	Proportions.	Remarks.
Lanterns, fighting	2 per gun	For Candles, *see* p. 723.
Lanyards { cocking	1 ,, ...	For guns with percussion locks.
friction tube, garrison { No. 2 ...	3 ,, ...	For guns on disappearing carriages.
,, 3 ...	3 ,, ...	For guns not on disappearing carriages.
special ...	3 ,, ...	For 8-in. Mark VII gun ❶
Levers { carrying projectile ...	1 ,, ...	Ditto ditto ❶
iron-shod, slide, 5 feet ...	2 ,,	
Measures, hydraulic buffer, filling	1 per work	For filling cylinders of disappearing carriages and hydraulic buffers.
Ordnance, B.L.	As authorised.	
Ordnance, B.L. — SPECIAL IMPLEMENTS.		
Bolts, eye, breech screw, 12-in.	1 per work for 12-in. and 10-in. guns	For slinging breech screw.
Levers, lengthening, cam lever, 8-in., Mark VII	1 per gun.	
Trays { cartridge	1 per 8-in. Mark VII	For loading cartridges and projectiles.
shot	1 ,, ,,	
loading	1 per gun, except 8-in. Mark VII.	
Wrenches { (a)	1 per 8-in. Mark VII gun	
(b)	1 ,, ,, ,,	
(c)	1 ,, ,, ,,	
(d)	1 ,, ,, ,,	
bracket, elevating...	1 ,, ,, ,,	
breech action ...	1 per 10-in. Mark I gun	For guns with percussion locks.
breech mechanism	1 per 8-in. Mark VII gun	
firing mechanism ...	1 per gun	For guns with electric locks.
nut vent	1 per gun	Not for 8-in. Mark VII guns.
pivot, elevating, 8-in. Mark VII	1 per 8-in. Mark VII gun	
stud and screw, No. 1	1 per gun...	For removing elevating studs, pivots and fixing screws. 9·2-inch and upwards.
Planks, stacking projectiles, heavy	1 per work.	
Position-finders, depression, Artillery	As authorised.	
Pumps, air, double, carriage, garrison, disappearing*	1 per work of 3 or less disappearing carriages 2 per work of more than 3 disappearing carriages.	
Rammers, B.L. (12-in. to 8-in.) ...	1 per gun.	
Range-finders, depression... ...	As authorised.	
Reservoirs, compressed air† ...	1 per disappearing carriage.	

* For spare parts *see* list on page 1022.
† To be kept in Artillery Store when not in use.

Digitized by Google

Equipment of B.L. 12-in., 10-in., 9·2-in., and 8-in. Guns—*continued.*

TABLE I—*continued.*	Proportions.	Remarks.
Rimers, vent, axial	1 per gun...	For rectifying axial vents. Not for 8-in. Mark VII guns.
Rods, vent, 36-inch	1 ,, ...	Not for 8-in. Mark VII guns.
Ropes, drag, heavy ... ... prs.	2 per work.	
Sabots, barrow, projectile, No. 1 ...	1 per 12-in. projectile ...	Where the No. 1 (Mark II) projectile barrow is used.
Scrapers, B.L. ordnance, half round, with brush	1 per gun...	For cleaning powder chamber.
Selvagees, projectile...	2 ,, ...	For slinging projectiles.
Separators, air pump	1 per pump	To separate the air from the water.
Shot, B.L.	... ...	*See* end of table.
Sights, B.L. { fore	2 per gun.	
Sights, B.L. { tangent	2 ,,	
Slides, L. { B.L. 12-in.	1 per gun according to description of mounting approved.	
Slides, L. { Barbette, B.L. (10-in., 9·2-in. and 8-in.)		
Spanners and special implements for mountings.	... ...	*See* Appendix XI, page 720*i*.
Spikes, gun, common	2 per gun.	
Sponges, B.L., chamber	1 per gun.	
Staves, end, B.L. { 12-in. (Mark II) ...	1 per gun	For Piasaba brush.
Staves, end, B.L. { 10-in. and 9·2-in. (Mark II)	1 ,, ...	For Piasaba brush.
Staves, end, B.L. { 8-in. (Mark II) ..	1 per 3 guns or less number.	For Piasaba brush.
Stores, for moving and mounting ...	Depend on mountings ...	For detail of stores, *see* pages 657, 659, 660, 661, 662, 666, and 667.
Tackles { gun, 3-in. white rope ...	2 per gun...	If required.
Tackles { loading, derrick... ...	1 per gun 10-in. and 9·2-in. mounted on disappearing carriages Mark I.	
Tackles { slinging side arms* prs.	1 per 12-in. B.L. gun in casemate.	For slinging side arms from roof of casemate.
Tampeons, B.L., L.S.	1 per gun...	For the muzzle.
Wrenches, knock up, G.S.	1 per work	For general purposes.

* Consisting of:—

Vocabulary Section IV.

Cordage, hawser, 3-strand, white, 1½-in.	10-ft.	To be made up locally.

Vocabulary Section V. (1.)

Balls, tackle, slinging side arms	2	To be made up locally.
Blocks, loading tackle, No. 8	2	
Eyes, tackle, slinging side arms	2	
Hooks ,, ,, ...	2	
Rings ,, ,, ...	4	

Digitized by Google

Equipment of B.L. 12-in., 10-in., 9·2-in., and 8-in. Guns—*continued.*

TABLE 1—*continued.*	Proportions.	Remarks.
Vocabulary Section V. (2).		
Bags, burster, B.L.* — common (12-in. to 8-in.)	1 per empty common shell	
Bags, burster, B.L.* — segment, 8-in. Mark VII	1 per empty segment shell	
Bags, primer, filled, 7 drams ...	3 per empty common shell	
Bearers, cartridge cylinder, Mark III	2 per gun...	For carrying cylinders.
Boxes, tube, vent-sealing, garrison	1 per gun.	To be hung up in the emplacement as a receptacle for one tin box of five tubes.
Cartridges, B.L., filled (12-in. to 8-in.	4 (½ charges) per projectile†	All the cartridges in Royal Artillery charge will be kept filled as far as store accommodation will admit, *see* paragraph 71.
Cylinders, cartridge, B.L. (12-in. to 8-in.)	As required.	
Fuzes‡ — percussion, direct action No. 3§	1 per common shell.	
Fuzes‡ — time, sensitive, middle, No. 24‖	1 per shrapnel shell ...	For 8-in. Mark VII guns.
Gauges — shell, ring, B.L. (12-in., 10-in., 9·2-in., and 8-in.) — band — broad — high	1 per work.	For shells with broad driving bands only
Gauges — shell, ring, B.L. (12-in., 10-in., 9·2-in., and 8-in.) — band — broad — low		
Gauges — shell, ring, B.L. (12-in., 10-in., 9·2-in., and 8-in.) — band — narrow — high		For shells with narrow driving bands only.
Gauges — shell, ring, B.L. (12-in., 10-in., 9·2-in., and 8-in.) — band — narrow — low		
Gauges — shell, ring, B.L. (12-in., 10-in., 9·2-in., and 8-in.) — body		
Gunpowder — pistol, R.F.G. and F.G.	As required	For bursting charges of Shrapnel shells.
Gunpowder — shell (P and F.G.)...	,, ,, ...	For bursting charges of common shells.
Implements, fuze and shell, Keys, fuze, universal	2 per gun...	The second key required for Mark III Direct Action fuze.
Plugs, fuze-hole, G.S...	1 per shell.	
Primers, Shrapnel shell	1 per empty Shrapnel shell	Issued in cylinders containing 10 each.
Shells, B.L., filled¶	... ...	See end of table.

* Dowlas. The stock of Serge for cast-iron and forged steel shells, and silk cloth for cast steel shells, will first be used up.

† The present supply of ½ charges for the 8-in. Mark VII gun will first be used up.

‡ The designation number is shown on the label of the cylinder or other package in which the fuze is packed. The number stamped on the fuze itself denotes the number of the thousand manufactured.

§ The present supply of fuzes, percussion, Armstrong, for the 8-in. Mark VII gun, will first be used up.

‖ The present supply of fuzes, time, large and small, for the 8-in. Mark VII gun, will first be used up.

¶ Supplied with fuze-hole plugs, which, however, are separately shown, and are to be separately charged and accounted for.

Digitized by Google

Equipment of B.L. 12-in., 10-in., 9·2-in., and 8-in. Guns—*continued.*

TABLE 1—*continued.*	Proportions.	Remarks.
Tubes, vent-sealing* { percussion	1 per round	Not for 8-in. Mark VII guns.
B.L., 8-inch { electric ...	1 ,, ...	For 8-in. Mark VII guns only.
B.L., 8-inch { mechanical ...	1 ,, ...	
Vocabulary Section VII. (1).		
Batteries and Keys, test and firing	1 per gun	For use with electric tubes.
Cable, firing, electric, twin § ...	30 yards per gun ...	For firing guns electrically.
Stands, telescope, 2½-in. socket ...	1 per work	For use with telescope.
Telescopes, 3 ft.	1 ,, ...	For general use.

* After use the tubes will be returned to store and forwarded to Woolwich as old metal.

§ C. 8 wire will be issued as required for renewal of standing wires on the carriages.

N.B.—Spare ordnance, carriages, and slides, component and spare parts of the same, and also spare stores, will be allowed specially.

The proportions of projectiles given in Classes I and II have been assigned on the assumption that the guns will be placed only on sea defences approachable by ironclad vessels; that the occasions where their fire might be required to aid in the land defences would be exceptional; that they might be opposed to wooden as well as to iron ships, and that they would generally (except in Class I) be supported by auxiliary fire or by guns of smaller calibre bearing on the same field, capable of maintaining a rapid fire, and suitable for repelling the landing of troops within short ranges.

	Class I. Guns supported by auxiliary fire, or by guns of smaller calibre bearing on the same field.		Class II. Guns unsupported (or practically unsupported) by auxiliary fire.	Remarks.
	B.L.		B.L. 8-inch.	
	9·2-inch and upwards.*	8-inch.		
Shells† { common... ...	50	70	50	Per 100 rounds.
{ Shrapnel ...	—	—	20	
Shot, Palliser	50	30	30	

* The proportions for the Spithead Forts will be:—Shells, common, 45, case shot, 5, and Palliser shot, 50.

† A proportion of segment shells has been supplied with the 8-in. Mark VII gun, but no more will be issued, and the proportions will in future be the same as for other 8-in. guns.

Digitized by Google

EQUIPMENT OF B.L. 6-INCH, 5-INCH, AND 4-INCH GUNS, FOR PERMANENT WORKS.

TABLE 2.	Proportions.	Remarks.
Vocabulary Section II. (1).		
Lamps, tracing	1 per gun	For night firing.
Vocabulary Section II. (2).		
Carts, shot	1 per district	For moving projectiles.
Drugs, gun, 5 ton	1 ,, ...	For ordnance up to 5 tons.
Vocabulary Section III.		
Chests, tool, empty, re-coppering guns B.L. (With tools shown at page 706).	As specially authorised. *See* paragraph 174.	For guns with cup obturator.
Chests, tool, filled No. 3 D		For repair of carriages and slides.
No. 11 A	1 per work	For repair of carriages and slides.
Bars, crow, 6 feet	1 ,, ...	For general use.
Cans, oil, lubricating, G.S. ...	1 per gun	For use of Ordnance Artificers.
Drivers, screw, G.S., 24-inch ...	1 ,, ...	For general use.
Forges, field, R.A., Mark IV, special.	As authorised. *See* paragraph 174.	For repair of guns, carriages, and slides.
Hammers, claw, 28 oz.	2 per battery	For general use.
Spanners, McMahon, 15-inch ...	1 per gun	For tightening nuts, &c.
Spanners, ordnance artificers, double-ended 1½in. and 1⅝in.; 1¼ ,, ,, 1½ ,, ; 1 ,, ,, ⅞ ,, ; ⅝ ,, ,, ¾ ,, ; ½ ,, ,, ⅜ ,,	1 set per work ...	For adjusting and tightening up bolts and nuts. For 6-inch guns only.
TOOLS, ORDNANCE.		
Tools, examining, painting and lacquering rifled ordnance, sets.	1 per district	For detail of tools, *see* Table A, pages 616 to 619.
Vocabulary Section IV.		
Brushes, water, carriage ...	2 per gun	For cleaning projectiles, &c.
Candles, magazine* ... lbs.	1 per fighting lantern.	
Chalk, white ... ... ,,	2 per gun.	Annual supply.
Glycerine ... ... ,,	1 per gauge dead weight testing.	For lubricating gauge.
Methylated spirits ...galls.	As required	For H.P. cylinders.
Oil, mineral ... ... ,,	As required	For H.P. cylinders and hydraulic buffers.
Soda, carbonate, dry ... lbs.	As required	For H.P. cylinders.

* Supplied by Army Service Corps.

Digitized by Google

Equipment of B.L. 6-in., 5-in., and 4-in. Guns, for Permanent Works—*continued.*

TABLE 2—*continued.*	Proportions.	Remarks.
Vocabulary Section V. (1).		
Bands, elevating...	1 per gun	For guns with removable elevating bands.‡
Barrows, powder	1 per work	For moving powder or filled cartridges.
Bearers, shot, B.L. 6-inch ...	1 per 6-inch gun ...	For moving projectiles.
Bits, vent, 20-inch	1 per gun	For clearing vent.
Boards, range, fuze scale ...	1 per 2·6-inch guns of same mark, or where mounted singly 1 per gun.	*To be provided locally.
Boxes grease, 3 lbs.	1 per 3 guns or less ...	For general purposes.
Boxes obturating pads ...	1 per gun	To contain 3 pads and 3 sets of discs. For guns with obturating pad only.
Brushes, piasaba, B.L., bore ...	1 per work	For cleaning the bore.
Buckets, sponge, garrison ...	1 per gun	For general use.
Caps, sponge§	1 per sponge where necessary.	To protect sponge head.
Carriages garrison, barbette, B.L. 6-inch.	1 per gun according to description of mounting approved.	
Carriages garrison, B.L. 6-inch, disappearing, Marks I, II, III and IV.†		Marks I and III disappearing carriages for Mark V gun, and II and IV for Mark IV and VI gun.
Carriages garrison, B.L. 6-inch, Vavasseur central pivot.		
Carriages siege, B.L. 5-inch, 6-ft. parapet		
Carriages siege, B.L. 4-inch, 6-ft. parapet		
Cases, cartridge, No. 25 ...	2 per 5-inch and 4-inch guns.	For bringing up cartridges.
Clamps, tangent sight, automatic A ...	1 per 5-inch and 4-inch guns.	
Clamps, tangent sight, automatic B ...	2 per 6-inch Mark IV and VI guns.	
Clamps, tangent sight, B.L. 6-inch Mark V	2 per 6-inch Mark V gun.	
Clinometers, garrison	1 per 3 guns or 1 per work.	For measuring angles and ascertaining quadrant elevation.
Covers breech, B.L.	1 per gun.	
Covers carriage, garrison, disappearing, and gun, B.L. 6-inch.	1 per 6-inch gun on disappearing carriage.	

* The fuze scale is either painted on the board, or printed on paper and attached to the board.

† The liquid at present in use in cylinders for these disappearing garrison carriages is :—

Methylated spirits ...	9¾ galls.	Mineral oil	¼ gall.
Distilled water	4½ ,,	Soda, carbonate ...	... 333 grains.

‡ Elevating bands of the earlier issues of 6-inch B.L. guns are fixtures, and as such are a component of the gun and not accounted for as a separate store.

§ Only to be used for sponges in transit, or where stores are damp, or when kept in the open.

Digitized by Google

Equipment of B.L. 6-in., 5 in., and 4-in. Guns, for Permanent Works—*continued.*

TABLE 2—*continued.*

	Proportions.	Remarks.
Extractors, tube { P. ... ... / P., special ...	1 per gun ... ... / 1 per 5 guns or less per work.	For extracting vent-sealing tubes.
Filters, hydraulic jack	1 per work	For filling jacks.
Flags, red, 12 ft. × 6 ft. ...	1 per practice battery...	*See* para. 100 and App. IV.
Frames, store, hydraulic jack, G.S.	1 per work or per 4 jacks.	For keeping jacks under pressure.
Gauges,* pressure, dead weight testing	1 per sub-district.	For disappearing carriages only.
Gyns, triangle, with appurtenances, light, tubular Mark II	1 per sub-district, or 2 if more than 3 works.	For mounting and dismounting ordnance.
Handspikes, common { 7 feet ... ... / 6 feet	2 per 6-inch gun ... / 5 per 5-inch or 4-inch guns, on travelling siege carriage.	Not to exceed 12 per work.
Hydro-clinometers	1 per 6-in. gun on barbette carriage.	Where racers are sufficiently out of level to cause a variation of 10 minutes elevation to the gun at different positions of traverse.
Indicators, pressure, spring, carriage, garrison, disappearing.	1 per 6-inch disappearing carriage, except Mark I.	
Indicators, range	As authorised	For coast batteries (local supply).
Jacks, hydraulic, G.S., 10 tons	1 per work, 6-inch only	For general purposes.
lifting screw, Clerk's	2 per work	For 4 and 5-inch.
Keys, tampeon, B.L., small ...	1 per 2 guns or less number.	Securing tampeon in gun.
Lamp, electric, telescope ...	1 per position-finder or depression range-finder, where the electric search light is installed.	
Lamps, electric, telescope: battery, Le Clanche, 4 cell†	1 per lamp.	
leads, flexible double strand, 2½ yds. (a)†	1 ,,	
switch and resistance coil†	1 ,,	
wires, connecting, "C. 5," 6 yds.†	1 ,,	
Lanterns, fighting	2 per 6-inch gun ...	For candles, *see* p. 729.
Lanyards: cocking	1 per gun	For guns with percussion locks.
friction tube: garrison No. 2 ...	3 per 6-inch gun on disappearing carriages.	
garrison No. 3 ...	3 per 6-inch gun on barbette carriages and slides.	
siege, No. 2 ...	3 per 5-inch and 4-inch guns.	

* A few "Gauges, Bourdon," were issued with the first mountings, but no more will be issued, and as they become unserviceable they will be replaced by the "Indicators, pressure, spring."

† These would not require to be exchanged in the event of a lamp being damaged.

Digitized by Google

Equipment of B.L. 6-in., 5-in., and 4-in. Guns, for Permanent Works—*continued.*

TABLE 2—*continued.*	Proportions.	Remarks.
Limbers, siege, B.L.	1 per 2 5-inch and 4-inch guns.	
Measures, hydraulic buffer, filling	1 per work	For filling cylinders of disappearing carriages and hydraulic buffer
Ordnance, B.L. 6-inch, 5 ,, , 4 ,,	As authorised.	
Ordnance, B.L. — Special Implements.		
Levers, lengthening cam lever	1 per 6-inch gun.	
Tommies, 6-inch	1 per 6-inch Mark V. gun.	
Trays, loading*	1 per 6-inch gun.	
Wrenches: bracket, elevating, 6-inch, Mark V	1 per 6-inch Mark V gun.	
Wrenches: breech action ...	1 per gun	
Wrenches: nut vent ...	1 per 6-inch Mark IV gun.	
Ordnance, B.L., wrenches: pivot, band, elevating, 6-inch, Mark V	1 per 6-inch Mark V gun.	
Ordnance, B.L., wrenches: end plate	1 per 6-inch Mark V gun.	
Planks, stacking projectiles, light	1 per work for 6-inch only.	For rolling projectiles.
Platforms, double decked, C† pivot	1 per 5-inch and 4-inch guns.	
Position-finders, depression, Artillery	As authorised.	
Pumps, air: double, carriage, garrison, disappearing‡	1 per work of 3 or less number of disappearing carriages. 2 per work of more than 3 disappearing carriages.	
Pumps, air: large, Armstrong§ ...	... ...	Mark I carriage.
Rammers, B.L. 6-inch	1 per 6-inch gun, mounted on other than disappearing carriages.	
Rammers, B.L. 5-inch	1 per 5-inch gun, also 6-inch on disappearing carriages.	
Rammers, B.L. 4-inch	1 per 4-inch gun.	
Range finders, depression ...	As authorised.	

* These will not replace any trays, cartridge, or trays, shot, that may have been issued until the latter becomes unserviceable.

† To be kept in Ordnance Store charge and demanded and laid as required. Should accommodation exist in the works in which they would have to be laid, arrangements should be made to have them stored there, and taken charge of, for the Ordnance Store Department, by the Master Gunner.

‡ For spare parts *see* list on page 1022*a*.

§ A number of these were issued with the first 6-inch disappearing carriages, but no more will be issued, and as they become unserviceable they will be replaced by the "Pumps, air, double, carriage, disappearing."

Digitized by Google

Equipment of B.L. 6-in., 5-in., and 4-in. Guns, for Permanent Works—*continued.*

TABLE 2—*continued.*	Proportions.	Remarks.
Reservoirs, compressed air* ...	1 per 6-inch disappearing carriage.	
Rimers, vent, axial	1 per gun	For rectifying axial vents.
Rods, vent, 20-inch	1 „	For cleaning vent.
Ropes, drag, heavy ... pairs	2 per work.	
Scrapers, B.L. ordnance, half round, with brush.	1 per 6-inch gun ...	For cleaning powder chamber.
Selvagees, projectile	2 per 6-inch gun ...	For slinging projectiles.
Separators	1 per air pump.	
	Land fronts. / Sea fronts.	
Shot, B.L. — case — 6-inch...	10 / —	
Shot, B.L. — case — 5 „	10 / 10	
Shot, B.L. — case — 4 „		
Shot, B.L. — Palliser — 6 „ ...	— / 20	
Shot, B.L. — Palliser — 5 „	— / —	
Shot, B.L. — Palliser — 4 „		
Sights B.L. — fore	2 per 6-inch gun, 1 per 5-inch and 4-inch guns.	
Sights B.L. — tangent	2 per 6-inch gun, 1 per 5-inch and 4-inch guns.	
Sights B.L. — telescopic ...	1 per 5-inch and 4-inch guns.	
Slides, L, barbette B.L. 6-inch	1 per gun on barbette carriage.	
Spanners and special implements for mountings	... ...	*See* Appendix XI, page 720*i*.
Spikes, gun, common	2 per gun.	
Sponges, B.L. — bore	1 per gun.	
Sponges, B.L. — chamber ...	1 per 6-inch gun.	
Staves, end, B.L.	1 per gun.	
Stores, for moving and mounting	Depend on mounting.	
Tackles, gun, 3-inch white rope	2 per 2 or less disappearing carriages.	
Tampeons, B.L., L.S.	1 per gun	For the muzzle.
Wrenches — knock up, G.S. ...	1 per work	For general purposes.
Wrenches — pivot — No. 5 ...	1 per 6-inch, on disappearing carriage, and 1 per 5-inch and 4-inch guns.	
Wrenches — pivot — No. 7 ...	1 per 6-inch on barbette and Vavasseur C. P. carriages.	
Vocabulary Section V. (2).		
Bags — burster, B.L. — common†	1 per empty common shell.	
Bags — burster, B.L. — Shrapnel	1 per 5-inch and 4-inch forged steel shells.	
Bags — primer, filled, 7 drams ...	3 per empty common shell.	

* To be kept in Artillery store when not in use.

† Dowlas. The serge for cast-iron and forged steel shells, and silk cloth for cast steel shells, already supplied, will be first used up.

Digitized by Google

Equipment of B.L. 6 in., 5-in., and 4-in. Guns, for Permanent Works—*continued.*

TABLE 2—*continued.*	Proportions.	Remarks.
Bearers, cartridge cylinder ...	2 per gun 6-inch B.L.	For carrying cylinders.
Boxes, tube, vent-sealing, garrison	1 per gun	To be hung up in the emplacements as a receptacle for one tin box of 5 tubes.
Cartridges, B.L., filled — 6-inch	4 (¼ charges) per projectile*	All the cartridges in Royal Artillery charge will be kept filled as far as store accommodation will admit. *See* paragraph 71.
5 ,, ...	2 (½ charges) per projectile.	
4 ,, ...	1 (full charge) per projectile.	
Cylinders, cartridge, B.L., 6-inch.	1 per full charge 6-inch	For cartridges.
Fuzes† — percussion — direct action, No. 3	1 per 6-inch, and 5-inch common shell.	
small, No. 8 ...	1 per 4-inch common shell.	
time, sensitive, middle, No. 24	1 per 6-inch, and 5-inch Shrapnel shell.	
time and percussion — short, No. 55 ...	1 per 4-inch Shrapnel shell.	
middle, No. 54	20 per cent. for 4-inch Shrapnel shell, in addition to the number of short No. 55.	For use at long range.
Gauges, shell, ring, B.L. 6-in., 5-in., and 4-in. — band — broad — high	1 per work.	
broad — low		
narrow — high		
narrow — low		
body		
Gunpowder — rifle pistol ... lb.	Sufficient to fill shells supplied empty.	
shell — P. ... ,,		
shell — F.G. ... ,,		
Implements, fuze and shell, Keys, fuze, universal	1 per gun, 4 inch. 2 per gun, 6-inch and 5-inch.	
Plugs, fuze hole, G.S.	1 per shell.	
Primers, Shrapnel shell ...	1 per empty Shrapnel shell, except 5-inch and 4-inch forged steel shells.	

Shells, B.L., filled‡		Land fronts.	Sea fronts.
common ...	6-inch ...	45	50
	5 ,, ...	45	45
	4 ,, ...		
Shrapnel ...	6-inch ...	45	30
	5 ,, ...	45	45
	4 ,, ...		

* Any ½ charges of prism or P² gunpowder already supplied will be first used up.

† The designation number is shown on the label of the cylinder or other package in which the fuze is packed. The number stamped on the fuze itself denotes the number of the thousand manufactured.

‡ Supplied with fuze hole plugs, which, however, are separately shown, and are to be separately charged and accounted for.

Digitized by Google

Epuipment of B.L. 6-in., 5-in., and 4-in. Guns for Permanent Works—*continued.*

TABLE 2—*continued.*	Proportions.	Remarks.
Tubes, vent sealing { electric, P.	1 per round, 6-inch B.L. guns only.	
{ percussion	1 per round.	
Vocabulary Section VII. (1).		
Batteries and keys, test and firing	1 per 6-inch gun ...	For use with electric tubes.
Cable, firing, electric, twin* ...	30 yards per gun ...	For firing guns electrically.
Stands, telescope, 2½-inch socket	1 per telescope	For telescopes.
Telescopes, 3-feet	1 per work.	

* C. 8 wire will be issued as required for renewal of standing wires on the carriages.

N.B.—Spare ordnance, carriages, and platforms, component and spare parts of the same, and also spare stores, will be allowed specially.

EQUIPMENT OF R.M.L. 17·72-INCH AND 16-INCH GUNS.

TABLE 3.	Proportions.	Remarks.
Vocabulary Section II. (1).	*Gibraltar.*	
	3 per work for 17·72-inch	For passages.
	2 ,, ,, ...	For moving about as required.
	Malta.	
	5 per work for 17·72-inch	For engine room.
Lanterns, brass, globular* ...	3 ,, ,, ...	For pump room.
	2 ,, ,, ...	For machine room.
	3 ,, ,, ...	For passages.
	2 ,, ,, ...	For moving about as required.
	Dover.	
	3 per work 16-inch ...	For passages.
Vocabulary Section III.		
Chests, tool, filled { No. 11 A	1 per station ...	For use of persons in charge of machinery.
{ No. 12 A	1 ,, ,, ...	
{ No. 13 A	1 ,, ,, ...	
Anvils, ¼ cwt.	1 per station, 16-inch gun only ...	For repairing purposes.
Axes, felling, straight helve		,, ,, woodwork.
Bars, crow, 6 ft.	1 per work	For general use.
Cans, oil, lubricating, G.S.	6 per work	For use of persons in charge of machinery.

* Oil and wick for these are supplied by Army Service Corps.

Digitized by Google

Equipment of R.M.L. 17·72-in. and 16-in. Guns—*continued.*

TABLE 3—*continued.*	Proportions.	Remarks.
Cradles, vent { 17·72-inch ... ... / 16-inch ... ... }	1 per battery and 1 spare per district ... ... / 1 per turret and 1 spare per district	For removing and fixing vent.
Forges, field, R.A., Mark IV	As authorised. *See* paragraph 174.	For use of persons in charge of machinery.
Hammers { claw, 28-oz. ... ... / fitters, copper, 48-oz. ...	2 per work ... ... / 1 per 16-inch gun ...	For general use. / For general use with machinery where a steel hammer would be unsuitable.
Knives, magazine	1 per 17·72-inch gun only	For removing tape band from cylinders.
Lathes, engineers	1 per station	For use of persons in charge of machinery.
Saws, ripping	1 per 16-inch gun only ..	For general use.
Spanners McMahon, 15-inch	1 per station	For use of persons in charge of machinery.
Spanners ordnance artificers, double ended { 1½-in. and 1⅝-in. / 1¼ ,, ,, 1⅜ ,, / 1 ,, ,, ⅞ ,, / ¾ ,, ,, ⅝ ,, / ½ ,, ,, ⅜ ,, }	1 set per work ...	For adjusting and tightening up bolts and nuts.
Vices, standing, 80 lbs.	1 per work	
Tools, Ordnance.		
Tools, examining, painting, and lacquering rifled ordnance sets	1 per station. In charge of I.W.S.	For detail of tools *see* Table A, pages 616 to 619.
Tools, Special.		
1 set of cup-leather moulds*	Per station for 17·72-inch guns only	For use of persons in charge of machinery.
1 set of taps for air cocks		
4 screwing tools, 1½ in., 1 in., ¾ in., ½ in. (one to each size)		
1 expanding tool, 1⅜ in.		
5 tools for leather washers, 1¼ in., 1⅛ in., 1 in., ¾ in., ½ in. (one to each size)		
1 set of spanners, special (10 in all) ...		
1 ,, ,, for recoil press (5 in all)		
1 ,, pipe spanners, steel (9 in all)...		
Vocabulary Section IV.		
Brushes, water, carriage	2 per gun...	For cleaning projectiles.
Cans, oil, feeding, 1-pint	1 per work	For feeding lanterns.
Candles, magazine†	1 lb. per fighting lantern.	
Chalk, white ... ... lbs.	2 per gun...	Annual supply.
Cordage, hawser, 3-strand, tarred, 3½-inch	20 fathoms, for 16-inch gun only	For suspending stage, used in cleaning boiler.

* To be turned in hard wood by local artificers.
† Supplied by Army Service Corps.

Digitized by Google

Equipment of R.M.L. 17·72-in. and 16-in. Guns—*continued.*

TABLE 3—*continued.*	Proportions.	Remarks.
Vocabulary Section V. (1).		
Bags, extractor, projectile	1 per extractor	To protect the head of the extractor.
Bits, vent, 36-inch	1 per gun	For removing irregularities in axial vents.
Boards, range, fuze scale	1 per gun	To be provided locally.*
Bolts, swivel, steel, double thread, ½-in. diam.	3 per 16-inch gun only ...	For lowering shell into shell tube.
Brushes, piasaba, { 17 72-in.† ... R.M.L. { 16-inch	1 per 17·72-inch gun } 1 per 16-inch gun {	For cleaning out the grooves.
Buckets, sponge, garrison	4 per gun	For general use.
Caps, sponge, No. 15‡	1 per sponge where necessary	To protect sponge head.
Carriages, garrison, { 17·72-inch ... R.M.L. { 16-inch ...	1 per 17·72-inch gun ... 1 per 16-inch gun ...	Sliding. Turret.
Clinometers, garrison	1 per work	For measuring angles and ascertaining quadrant elevation.
Covers, sights and shutter, R.M.L. 17·72-inch gun	1 set per 17·72-inch gun	For protection of sights and shutters.
Drifts, vent, 36-inch	1 per gun	For drifting axial vents.
Extractors { projectile, { 17·72-in. R.M.L. { 16-in.	1 per work.	
Extractors { tube { V.M.	1 per gun	For use in case of failure of extractor in vent head.
Extractors { tube { F., special ...	1 per 2 guns per work ...	For extracting jammed vent-sealing tubes.
Filters, hydraulic jack	1 per gun	For filling jacks.
Frames, store, hydraulic jack, G.S.	1 per work	For keeping jacks under pressure.
Handspikes, common, 7 feet ...	2 per gun.	
Indicators, range	As authorised	For coast batteries (local supply).
Jacks, lifting, { G.S., 30 tons... ... hydraulic { Tangye's, 7½ tons ...	2 per gun ... ... 1 per work, for 16-inch guns	For general purposes.
Lamps, electric, telescope	1 per position-finder or depression range finder where the electric search light is installed.	
Lamps, electric, telescope { battery Le Clanche 4 cell§	1 per lamp	
Lamps, electric, telescope { leads, flexible, double strand 2½ yards (a) §	1 ,,	
Lamps, electric, telescope { switch and resistance coil§	1 ,,	
Lamps, electric, telescope { wires, connecting "C.5." 6 yards§	1 ,,	
	Gibraltar.	
Lanterns, fighting	4 per gun, 17·72-inch ...	For gun emplacements.

* The fuze scale is either painted on the board, or printed on paper and attached to the board.

† Also rammer and sponge (the brush, rammer and sponge are all combined in one).

‡ Only to be used for sponges in transit, or where stores are damp.

§ These would not require to be exchanged in the event of a lamp being damaged.

Digitized by Google

Equipment of R.M.L. 17·72-in. and 16-in. Guns—*continued.*

TABLE 8—*continued.*	Proportions.	Remarks.
	Malta.	
Lanterns, fighting	4 per gun, 17·72-inch ...	For gun emplacements.
	2 ,, ,, ...	For traversing recess.
	2 ,, ,, ...	For loading port.
	*Dover.**	
	4 per gun, 16-inch ..	For gun emplacements.
Lanyards, friction tube, garrison No. 1	3 per 16-inch gun	Without toggle.
,, 4	3 per 17·72-inch gun	
Levers, hand, bolt, retaining projectile	2 per work for 16-inch gun only	For projectile trolley.
iron-shod, crow, 7 feet ...	1 per gun	For drawing bolts, &c.
Loops, withdrawing projectiles ...	3 per 16-inch gun.	
Measures, hydraulic buffer filling ...	1 per work	For filling the cylinder of hydraulic buffer.
Ordnance, R.M.L. 17·72-inch, 16-inch	As authorised ...	For Fittings, Special Implements, and Sights, *see* pages 740 and 741, and for Spare parts, *see* Handbooks.
Planks, stacking, projectile, heavy	2 per work	For rolling projectiles on.
Rammers, cartridge, tube... ...	1 per 16-inch gun only ...	For pushing ¼ charge into cartridge tube.
wad, shell tube ...	1 ,, ,,	For inserting wad into shell tube.
R.M.L. 16-inch ...	1 per work, for 16-inch gun only	For use in the event of the steam gear getting out of order.
Range-finders, depression	1 per work	Where suitable site can be obtained.
Rimers, vent, axial	1 per gun	For rectifying axial vents.
Rods, test, loading, R.M.L. 17·72-inch	1 per 17·72-inch gun ...	To ascertain if the shell has shifted in the bore after loading at practice.
vent, 36-inch	2 per 17·72-inch and 16-inch gun	For cleaning the vent.
Ropes, drag, heavy	2 per work for 16-inch gun only	
guide, rammer, R.M.L. 16-in.	2 per work, for 16-inch gun only	For use in the event of the steam gear getting out of order.
Scotches, medium	As required	For scotching up ends of piles of projectiles
Screws, preserving, eyebolt hole ...	As required	For projectiles having the hole eyebolt lifting.
Selvagees, projectile 4 ft. 6 in. long	2 per work for 16-in guns only	For lifting projectiles, also for lifting machinery for repairs and cleaning.
Shot, R.M.L., Palliser	50 per gun	Present proportions will first be used up.
Skids, 6 ft. × 12 in. square... ...	1 per 17·72-inch gun	For retaining gun in position when run back.
1 ft. 2 in. × 12 in. square ...	1 ,, ,, ,,	
10 in. × 12 in. square ...	1 ,, ,, ,,	

* At Dover turret these are for service in action only when electric light is not in use.

Digitized by Google

Equipment of R.M.L. 17·72-in. and 16-in. Guns—*continued.*

TABLE 3—*continued.*	Proportions.	Remarks.
Slides, L., R.M.L. 17·72-inch ...	1 per gun	With hydraulic traversing and loading gear.
16-inch ...	1 per gun	Turret, left and right.
Sponges, R.M.L. 16-inch	1 per work, for 16-inch gun only	For use in the event of the steam gear getting out of order.
Stamps, steel, W	1 per work	For stamping base plugs of Palliser shot, formerly termed shell, when weighted up with sand.
Stores for moving and mounting ...	1 set per station for 17·72-inch gun	Special, to be kept in Ordnance Store charge.
Tackles, loading, derrick, 12·5 inch	1 per 16 inch gun ...	For hauling shells out of loading tubes.
Tampeons	1 per gun	For the muzzle to protect the bore.
Trolleys loading, R.M.L. 17·72-inch	4 per work	2 per loading chamber.
16-inch cartridge ...	2 ,, ,, ...	1 ,, ,, ,,
16-inch projectile ...	2 ,, ,, ...	1 ,, ,, ,,
shell, R.M.L. 17·72-inch	1 per 17·72-inch gun ...	For moving shells.
Wadhook, R.M.L. 16-inch	1 per work for 16-in. gun	
Wads 17·72-inch	1 per round	For retaining projectile in place after gun is loaded.
16-inch	1 ,, ,, ...	
Wheels, trolley, loading, R.M.L. 17·72-inch	2 per 17·72-inch loading trolley	Spare.
Wrenches, knock up, G.S.	2 per work	For tightening nuts and general use.
Vocabulary Section V. (2).		
Bags burster, R.M.L., common 17·72-inch	1 per 17·72-inch empty shell.	
16-inch ..	1 per 16-inch empty shell	
primer, filled 10-oz.	1 per 17·72-inch empty common shell.	
7 drams ...	3 per 16-inch empty common shell.	
Bearers, cartridge cylinder	3 per 16-inch gun.	
Boxes, tube, vent-sealing, garrison...	1 per gun	To hold vent-sealing tubes.
Cartridges, R.M.L., filled, silk cloth 17·72-inch, 112½ lb. prism[1] black *or* prism[2] ... ... 16-inch, 112½ lb. prism[1] brown...	quarter charge, 4 per projectile	All the cartridges in Royal Artillery charge will be kept filled as far as store accommodation will admit, *see* para. 71.
Cases, powder, cylindrical, Z ...	2 per 17·72 inch projectile (each to hold 2 quarter charges).	
,, ,, ,, Levers...	3 per 17·72-inch gun ...	For opening cylindrical cases.
Cylinders, cartridge, R.M.L. 17·72-inch, 112½ lb. prism	4 per 16-inch projectile (each to hold 1 quarter charge).	

Digitized by Google

Equipment of R.M.L. 17·72-in. and 16-in. Guns—*continued.*

TABLE 3—*continued.*

	Proportions.	Remarks.
Fuzes* percussion, Pettman, G.S., No. 5	1 per common shell ...	Issued in tin cylinders containing 5 each.
Fuzes* time, 15 seconds, with detonator, No. 43†	1 per Shrapnel shell and 10 per cent. spare ...	Issued in tin cylinders containing 5 each.
Gas-checks, R.M.L. 17·72-inch ...	1 per 17·72-inch projectile	For giving rotation to the projectile.
Gas-checks, R.M.L. 16-inch ...	1 per 16-inch projectile...	For giving rotation to the projectile.
Gauges. shell, ring, R.M.L., body and gas-checks 17·72-inch ...	1 per work for 17·72-inch gun.	
Gauges. shell, ring, R.M.L., body and gas-checks 16-inch ...	1 per work for 16-inch gun.	
Grummets, projectile, R.M.L. 17·72-inch	1 per 17·72-inch projectile.	For protecting base of projectile.
Grummets, projectile, R.M.L. 16-inch	1 per 16-inch projectile	For protecting base of projectile.
Gunpowder pistol, rifle pistol, F.G., R.F.G., *or* R.F.G.[2] shell, L.G.... ...	Sufficient to fill shells supplied empty	As at present arranged shells will be supplied filled.
Implements, fuze and shell Bits, hook-borer ...	6 per gun	For Shrapnel shell.§
Implements, fuze and shell Cylinders, common...	1 per gun	For Shrapnel shell.§
Implements, fuze and shell Handles, hook-borer	1 per gun	For Shrapnel shell.§
Implements, fuze and shell Hooks, hook-borer ..	1 per gun	For Shrapnel shell.§
Implements, fuze and shell Keys, fuze, universal‡	1 per gun.	For Shrapnel shell.§
Implements, fuze and shell Scrapers, shell ...	2 per gun.	For Shrapnel shell.§
Lamps, magazine passage ...	*Gibraltar.*	
	2 per work, 17·72-inch ...	For engine room.
	2 ,, ,, ...	For pump room.
	1 ,, ,, ...	For machine room.
	1 ,, ,, ...	For traversing recess.
	Malta.	
	1 per work, 17·72-inch...	For pump room, for artificers use.
Levers, grummet	2 per gun...	For removing grummets from base of projectiles.
Plugs, fuze-hole, G.S.	1 per shell	For preserving fuze-holes.
Primers, Shrapnel shell	1 per empty Shrapnel shell**	Issued in cylinders containing 10 each.
Shells, R.M.L. filled common††	50 per gun.	
Shells, R.M.L. filled Shrapnel‡‡	50 per gun.	
Tubes, vent-sealing¶ electric, V	1 per round.	
Tubes, vent-sealing¶ friction, V	1 per round	In boxes of 5 each.

* The designation number is shown on the label of the cylinder or other package in which the fuze is packed. The number stamped on the fuze itself denotes the number of the thousand manufactured.

† When the present supply of Shrapnel shells is used up these will be withdrawn.

‡ Will only be supplied as the "Keys, fuze, and plug, G.S." become unserviceable.

§ When the present supply of Shrapnel shells is used up these will be withdrawn.

** These are only required whilst the present proportion of ammunition exists.

†† Supplied with fuze-hole plugs, which, however, are separately shown, and are to be separately charged and accounted for.

‡‡ These no longer form part of the equipment, but any remaining on charge will be used up.

¶ After being fired the tubes will be returned to store and forwarded to Woolwich as old metal.

Digitized by Google

Equipment of R.M.L. 17·72-in. and 16-in. Guns—*continued.*

TABLE 3—*continued.*	Proportions.	Remarks.
Vocabulary Section VI.		
Grindstones, 24-inch	1 for 16-inch gun only ...	For sharpening tools.
Ladders, standing, 33 feet	1 for 16-inch gun only ...	For cleaning boiler flue.
Scissors, lamp ... ... pairs	1 per work.	Trimming wicks.
Vocabulary Section VII. (1).		
Batteries and keys, test and firing*	2 per gun	For use with electric tubes.
Galvanometers, detector, 3-coil ...	2 per work for 16-inch gun	For testing electric firing gear.
Instruments, time of flight ...	2 per work	For use at practice.
Stands, telescope, 2½-inch socket ...	1 per telescope.	
Telescopes, 3 feet	1 per work	For general use.
Wire, covered, C 8 ... ...yards	50 per gun	For making connections between electric tubes and firing battery.

* Will only be supplied as batteries, Le Clanché firing, 3 cell, and batteries, Menotti, test, become unserviceable.

Fittings, Special Implements, and Sights for 17·72-inch and 16-inch R.M.L. Guns.

(*Referred to at p.* 737.)

	17·72-inch.	16-inch.	Remarks.
FITTINGS.			
Brackets, elevating	*a*1	*b*1	*a*. With four fixing screws. *b*. With 2 studs, 2 keep-pins, and 14 fixing screws.
Counterweights, muzzle (with 3 fixing screws)	1	—	To facilitate mounting or dismounting by balancing preponderance when the gun is suspended by the trunnions.
Holders, tube	3	3	Including 1 spare.
Plates, index, left *or* right (with 2 fixing screws, and reader with 2 fixing screws) ...	—	1	
Screws, bracket: elevating, preserving	4	14	
Screws, bracket: fore-sight, preserving	—	3	
Screws, bracket: inclined-plane, preserving ...	—	4	
Screws, bracket: latch, retaining, preserving ...	8	8	Also hinge plate.
Screws, bracket: link, connecting, preserving ...	12	—	
Screws, stud, trunnion, preserving ...	2	2	
Shutters*	1	1	
Studs, trunnion (with collar)	2	2	
Vents, axial	2	2	Including 1 spare.

* Consisting of socket supporting vent, with fixing screws (6 for 17·72-inch and 4 for 16-inch): guide, tube-holder with 3 fixing screws; hinge plate with 4 fixing screws, hinge bolt, and keep-pin; wheel lanyard-guide with pulley, axis pin, bolt with flat spring, chain, and eyebolt; guide pulley and axis pin; 2 retaining brackets for latches with 4 fixing screws; handle with 2 hinge pins and 2 retaining studs; 2 latches with 2 spiral springs, 2 directing studs for latches, and 1 electric and 1 friction firing plug.

Digitized by Google

Fittings, Special Implements, and Sights for 17·72-in. and 16-in. R.M.L. Guns—*continued.*

		17·72-inch.	16-inch.	Remarks.
	SPECIAL IMPLEMENTS.			
Wrenches	holder, tube	1	1	
	nuts, vent	1	1	
	plug, shutter	1	1	
	shutter	1	1	In two parts.
	stud, trunnion	1	1	
	stud, bracket, elevating ...	—	1	
	SIGHTS.			
Sights, R.M.L., reflecting — fore	17·72-inch (with bracket and 2 fixing screws) — left	1	—	
	17·72-inch (with bracket and 2 fixing screws) — right ...	1	—	
	16-inch, left *or* right (with bracket and 3 fixing screws)	—	1	
Sights, R.M.L., reflecting — hind	17·72-inch, lower (with reflector, bracket, and fixing screws) — left ...	1	—	
	17·72-inch, lower (with reflector, bracket, and fixing screws) — right	1	—	
	17·72-inch, upper (tangent scale and sliding socket, pinion spindle and lever, hand-wheel, nut, and wheel index with pointer; guide brackets for sliding socket with fixing screws; carrier for upper reflector with mirror, pivot, and 2 keep-pins; directing bars for reflector, with hinge, bolt, washer, and keep-pins; bracket for connecting link with link, and 6 fixing screws; guide bar bracket, with rollers, spindles, and fixing screws) — left ...	1	—	
	17·72-inch (upper) (tangent scale and sliding socket, pinion spindle and lever, hand-wheel, nut, and wheel index with pointer; guide brackets for sliding socket with fixing screws; carrier for upper reflector with mirror, pivot, and 2 keep-pins; directing bars for reflector, with hinge, bolt, washer, and keep-pins; bracket for connecting link with link, and 6 fixing screws; guide bar bracket, with rollers, spindles, and fixing screws) — right	1	—	
	16-inch (with tangent scale, bar, and clamp bracket with reflector)	—	1	
	Mirrors, 17·72-inch — lower — left	1	—	Spare.
	Mirrors, 17·72-inch — lower — right	1	—	Spare.
	Mirrors, 17·72-inch — upper — left	1	—	Spare.
	Mirrors, 17·72-inch — upper — right	1	—	Spare.
Sights, turret, Dover — fore		—	1	
Sights, turret, Dover — hind, left *or* right		—	1	
(with bracket, inclined plane, and 4 fixing screws, and sight-recording and gun-recording gear)				

Digitized by Google

EQUIPMENT OF R.M.L. 12·5-IN., 12-IN. (35 OR 25-TONS), 11-IN., 10·4-IN., 10-IN., 9-IN. 8-IN., AND 7-IN. GUNS.

TABLE 4.	Proportions.	Remarks.
Vocabulary Section II. (1).		
Lamps, tracing	1 per gun...	For night firing.
Vocabulary Section II. (2).		
Carts, trench	1 per work over 3 guns.	For moving heavy projectiles.
Drugs, gun, 25 tons*	1 per district	Capable of moving guns up to 25 tons.
Limbers, sling wagon, 12 tons ... **Wagons,** sling, 12 tons	1 per district	Capable of moving guns up to 12 tons. *See* note.*
Vocabulary Section III.		
Chests, tool, filled { No. 3 D ... ... No. 11 A... ...	As authorised ... ... 1 per work	*See* par. 174, and pages 517 to 520.
Bars, crow, 6-feet	1 per battery	Act as powerful levers.
Cans, oil lubricating { G. S. ... ... smiths... ...	1 per gun on turntables 1 to 4 guns per work ..	For lubricating bearings of turntables. Globular can, with fine spout.
Cradles, vent, 12·5-inch	1 per battery for 12·5-in. Mark II guns	
Forges, field, R.A., Mark IV... ...	As authorised. *See* paragraph 174.	
Hammers, claw, 28-oz.	2 per battery	For general use.
Spanners { McMahon, 15-inch	1 per battery, for all ordnance	For tightening nuts, &c.
ordnance artificers, double-ended { $1\frac{1}{2}$-in. and $1\frac{3}{4}$-in. $1\frac{1}{4}$-in. ,, $1\frac{1}{2}$-in. 1-in. ,, $\frac{7}{8}$-in. $\frac{3}{4}$-in. ,, $\frac{5}{8}$-in. $\frac{1}{2}$-in. ,, $\frac{3}{8}$-in.	1 set per work	For adjusting and tightening up bolts and nuts.
TOOLS, ORDNANCE.		
Tools, examining, painting and lacquering rifled ordnance ... sets	1 per district	According to the nature of ordnance in the district. For detail of tools, *see* pages 616 to 619.
Vocabulary Section IV.		
Blocks, wood, Bothway, single, 8-inch	2 per gun in emplacements with sunken ways and loading stages	Snatch-blocks for other guns form part of the slide.
Brushes, water, carriage	2 per gun...	1 for cleaning the sponge, and 1 for projectiles in gun emplacements.

NOTE.—As regards the proportion "per district" throughout these tables, *see* para. 62.
* Drugs are specially intended for confined localities where the sling wagon could not be used, they would not therefore *both* be supplied except in important and extensive districts. They will in all cases be made the subject of special requisition.

Digitized by Google

Equipment of R.M.L. 12·5-in., 12-in. (35 or 25-tons), 11-in., 10·4-in., 10-in., 9-in., 8-in., and 7-in. Guns—*continued.*

TABLE 4—*continued.*	Proportions.	Remarks.
Candles, magazine*	1 lb. per fighting lantern	
Chalk, white ... ... lbs.	2 per gun	Annual supply.
Cordage, white... ... ... fms.	According to gun† ...	For the running back gear.
Oil, mineral	Sufficient to fill the hydraulic buffer.	
Miscellaneous Stores.		
Handbooks { for ordnance... / for range-finder }	*See* paragraph 191.	
Vocabulary Section V. (1).		
Axletrees, transporting, slide, iron, R.M.L., 11-inch to 7-inch	1 of each nature for each district or group of sub-districts (such as Isle of Wight or Portland) where required and roads are suitable.	
Bags, extractor, projectile { 12·5-in. / 9 ,, }	12·5-in. to 10-in., except 10·4-in. 9-in. to 7-in. } 1 per extractor	To cover the head.
Barrows { powder	1 per work	For moving powder or filled cartridges.
Barrows { projectile { No. 1 ...	1 per 12·5-in. gun ...	For service at the guns.‡
,, 2 ...	1 per 12-in. 35-ton gun ...	
,, 3 ...	1 per 12-in. 25-ton or 11-in. gun	
,, 5 ...	1 per 10-in. and 10·4-in. gun§	
,, 11 ...	1 per 9-in. to 7-in. gun ...	
Bearers, shot, R.M.L. { 9-inch ... / 7 ,, ... }	1 per 9-in. gun { when / 1 per 7-in. gun { specially required } }	Used in loading.
Bits, vent { 36-in. ... ... / 20 ,, ... }	1 per 12·5-in. gun ... / 1 per 10·4-in. gun ...	
Boards { range, fuze scale	1 per 2 guns of same nature, or when mounted singly, 1 per gun	To be provided locally.‖
Boards { scale, raising projectiles / ,, ,, ,, / Chains ... ... }	2 per wharf where there are cranes	For landing projectiles. To be borrowed when required from O.S.D., and will not form part of the equipment.
Boxes, grease, 3 lbs.	1 to 3 guns under 11-in. per work	For guns of higher natures, a grease box is fitted to each slide.

* Supplied by Army Service Corps.

† 35-ton guns take 12 fms. 3½-inch rope, 25-ton guns 13 fms. 3-inch, and 18 and 12-ton guns 10 fms. 3-inch rope.

‡ In open works, not paved, a "Barrow, projectile, road," will be allowed in addition for each 35- or 38-ton gun, for transporting projectiles over roads, gravel, &c. "Barrows, projectile, shingle," are also allowed to certain works for transporting 12-in. and 12·5-in. projectiles over sand and shingle.

§ No. 4 barrows in use with 10-in. guns will continue in use until worn out.

‖ The fuze scale is either painted on the board or printed on paper and attached to the board.

Digitized by Google

Equipment of R.M.L. 12·5-in., 12-in. (35 or 25-tons), 11-in., 10·4-in., 10-in., 9-in., 8-in., and 7-in. Guns—*continued.*

TABLE 4—*continued.*

	Proportions.	Remarks.
Brushes, piasaba, R.M.L. (12·5-inch to 7-inch)	1 per practice battery for each nature of gun from which practice is carried on	For cleaning out the grooves.
Buckets, sponge, garrison	1 per gun	For general use.
Caps, sponge (No. 9 to No. 14)* ...	1 per sponge where necessary	To protect sponge head.
Carriages, garrison: R.M.L.‡ (12·5-in. to 7-inch) casemate or dwarf small port; 9-in. and 7-in. Moncrieff ... ...; barbette, 10·4-in. ...	1 per gun, except 10·4-in., according to description of mounting approved.	
Carriages, garrison: sliding medium, No. 7	1 per 7-in. 6½ ton gun.	
Carriages, garrison, R.M.L. — SPECIAL IMPLEMENTS. Bars, lifting pump ...	1 per 6 or less carriages per work	For raising hydraulic lift.
Brackets, lifting pump		
12·5-in. small port: Pipes, filling: buffer, hydraulic; lift, hydraulic	1 per work	For 7 feet recoil carriages only.
12·5-in. small port: Spanners: cap, pump ...; cover, cistern; valve: release, suction		
12·5-in. small port: Tommics: large ...; small ...	1 per work	For use in taking the lift to pieces.
12·5-in. small port: Wrenches: ram leather; spindle; gland		
Carriages, garrison, R.M.L. — SPECIAL APPARATUS. barbette 10·4-in.: Apparatus, washing out, R.M.L. 10·4-in barbette; Apparatus, special loading, R.M.L. 10·4-in. barbette; Gear, loading	1 per gun	
Cascable, slinging	1 per Work, for 10·4-inch guns.	
Clamps tangent sight, A *or* C ...	2 per gun, 3 for 12·5-inch and 12-inch 35-ton guns	
Clinometers, garrison	1 per group of guns ...	Measuring angles of slopes and ascertaining quadrant elevations.
Clippers, portfire	1 per battery for all ordnance	To cut lighted portfires.
Cover, sight, R.M.L. reflecting: lower	1 per carriage ...	For protecting sights, 9-inch and 7-inch R.M.L. counterweight carriages, Mark II.
Cover, sight, R.M.L. reflecting: upper	1 ,, ...	

* Only to be used for sponges in transit or where stores are damp.

† When mounted in casemates or galleries, drip pans are supplied for attachment to the carriage or slide to catch the drip of oil from the hydraulic buffer.

‡ Carriages mounted on slides, in sunken way emplacements, will have a loop fitted on each side for guide ropes of rammers.

Digitized by Google

Equipment of R.M.L. 12·5-in., 12-in. (35 or 25-tons), 11-in., 10·4-in., 10-in., 9-in., 8-in., and 7-in. Guns—*continued.*

TABLE 4—*continued.*	Proportions.	Remarks.
Cover, sight, R.M.L., reflecting, hind	1 per carriage	For protecting sights, 7-inch R.M.L. counter-weight carriages, Mark I.
Drifts, vent, 36-inch	1 per 12·5-in. Mark II and 10·4-in. guns	
Extractors, projectile R.M.L. (12·5-inch to 7-inch)	2 per battery of each kind required, except 10·4-in. guns and 7-in. guns on Moncrieff carriages	The 10, 11, and 12-inch studded take the same extractor.
Extractors, projectile R.M.L. 7-in. jointed	2 per battery for 7-inch guns on Moncrieff carriages	
Extractors, tube V.M.	2 per 12·5-inch Mark II gun and 10·4-inch	To remove the vent sealing tube.
Extractors, tube F, special ...	1 per battery for 12·5-in. Mark II, and 10·4-in. guns	To remove jammed tubes.
Filters, hydraulic jack	2 per sub-district; for small port carriages, 1 per work	For filling the jack.
Flags, red, 12 ft. × 6 ft.	1 for each practice battery	*See* para. 100 and App. IV.
Frames, store, hydraulic jack, G.S.	1 for every 4 or less number of hydraulic jacks in a sub-district	For keeping the jacks under pressure.
Frames, store, hydraulic jack, G.S., Block packing (cap, rear roller jack; foot, rear roller jack)	1 per jack when not permanently kept on a carriage	For use in the "frame store, hydraulic jack."
Gyns, triangle, with appurtenances (heavy * ...; light † ...)	1 per sub-district, or 2 if more than 3 works. (In exceptional positions, if more are considered necessary, they must be specially applied for)	Heavy for 12-ton guns and under, Light for 7-ton guns and under, of all natures.

* Complete with 1 gyn tackle, 1 erecting ditto (except for Mark II gyns), 4 windlass levers with ropes, 3 wood trucks, 3 slings of 9-inch rope (16, 7, and 3 feet long), and lashing for short slings. A gyn tackle consists of 18 fathoms of 5-inch white bolt (or hawser-laid) rope, with 2 treble 15-inch Bothway blocks. An erecting tackle consists of 7 fathoms of $2\frac{1}{2}$-inch white rope, with 1 single 8-inch Admiralty block; it is employed to raise the gyn tackle to the head of the gyn. There are also required 1 8-feet lever, and 4 heavy drag ropes (these will be supplied from the equipment of the work in which the gyn is required).

† Complete with one gyn tackle, 4 levers (2 of which with ropes), 3 wood trucks, and 2 slings of 7-inch white rope. The gyn tackle consists of 18 fathoms of 4-inch white bolt rope with 2 treble 12-inch Bothway blocks. There are also required 4 heavy drag ropes (these will be supplied from the equipment of the work in which the gyn is required).

Digitized by Google

Equipment of R.M.L. 12·5-in., 12-in. (35 or 25 tons), 11-in., 10·4-in., 10-in., 9-in., 8-in., and 7-in. Guns—*continued.*

TABLE 4—*continued.*	Proportions.	Remarks.
Handspikes, common, 7-ft. ...	2 per gun...	Not to exceed 12 per work.
Heads, rammer and sponge	1 per 10·4-in. gun	
Horns, powder*	1 per battery for all ordnance	For priming guns if required.
Hydro-Clinometers	1 per 12·5-inch and 12-inch (35 ton) gun.	
	1 per 12-inch (25 ton) to 9-inch, except 10·4 inch and 9-in on Moncrieff carriage.	Where racers are sufficiently out of level to cause a variation of 10 minutes elevation to the gun at different positions of traverse.
Indicators, range	As authorised	For coast batteries (local supply).
Jacks, lifting, hydraulic, Tangye's† — 22½ tons ...	2 per district for guns of 35 or 38 tons	For general purposes.
Jacks, lifting, hydraulic, Tangye's† — 15 tons ...	2 per district for guns of 25 tons	For general purposes.
Jacks, lifting, hydraulic, Tangye's† — 7½ tons ...	3 per sub-district ...	For general purposes.
Jacks, lifting, hydraulic, Tangye's† — Spanners	1 per 2 jacks O.P. ...	For taking jacks to pieces. N.B.—A spanner is supplied with the N.P. jack.
Lamps, electric, telescope	1 per position-finder or depression range-finder where the electric search light is installed	
Lamps, electric, telescope — battery Le Clanche, 4 cells‡	1 per lamp	
Lamps, electric, telescope — leads, flexible, double strand, 2½ yards (a)‡	1 ,,	
Lamps, electric, telescope — switch and resistance coil‡	1 ,,	
Lamps, electric, telescope — wires, connecting, "C. 5." 6 yards‡	1 ,,	
Lanterns, fighting	2 per casemate	For candles, *see* page 743.
Lanyards, friction tube, garrison — No. 1	3 per 12·5-in. Mark II and 10·4-in. guns	
Lanyards, friction tube, garrison — No. 2	3 per gun on Moncrieff carriages	
Lanyards, friction tube, garrison — No. 3	3 per gun, except 12·5-in. Mark II, 10·4-in., and guns on Moncrieff carriages	
Lashings, white, 1½-inch, 24-feet ...	1 per rammer for 7-in. 6½-ton guns on 6-ft. parapet carriage and slide	For ramming home when necessary.

* Contains 1½ lbs of gunpowder, included in proportion at page 753.

† Instructions for the care and use of these jacks are given at pages 608, 609, and 610, and in R.C.D. lithographs, Nos. 79 and 80, which should be demanded as required. Tangye's jacks will be replaced by G.S. jacks, of 30, 20, and 10 tons respectively, as the present stock of the former becomes used up.

‡ These would not require to be exchanged in the event of a lamp being damaged.

Digitized by Google

Equipment of R.M.L. 12·5-in., 12-in. (35 or 25-tons), 11-in., 10·4-in., 10-in., 9-in., 8-in., and 7-in. Guns—*continued.*

TABLE 4—*continued.*	Proportions.	Remarks.
Levers, iron shod, crow, 7 feet ...	1 per work for all ordnance	For drawing bolts, &c.
Levers, iron shod, slide, 5 feet ...	2 per slide, but if fitted with traversing gear, 2 per work	Used in traversing the slide.
Levers, pointed, No. 1 ...	2 per gun, except 10-in. small port and Moncrieff	For 25-ton guns and over; For guns under 25 tons: For elevating the gun or running up the carriage.*
Levers, pointed, No. 2 ...	2 per gun, except 10-in. small port and Moncrieff	For 25-ton guns and over; For guns under 25 tons: For elevating the gun or running up the carriage.*
Levers, pointed, No. 3	2 per 10-in. small port gun	For running up or back.
Levers, pointed, No. 5, 6, *or* 7 ...	3 per Moncrieff 7-in. or 9-in. gun	For running up or back.
Levers, 8 feet	1 per heavy gun... ...	For prypole ring in lifting.
Limbers, transporting slide, iron ...	1 for each district or group of sub-districts (such as Isle of Wight or Portland) where required, and roads are suitable	*See* Axletrees.
Linstocks	1 per battery for all ordnance	For holding lighted slow match.
Measures, hydraulic buffer, draw off, 2 pints	1 per work for 12·5-in. small port carriages	For 7-ft. recoil carriages only.
Measures, hydraulic buffer, filling	1 per work	For filling the cylinders of hydraulic buffers.
Ordnance, R.M.L., 12·5 to 7-inch	As authorised	For Fittings and Sights, *see* page 756.
Ordnance, R.M.L., sockets, sight, centre, hind, A. ...	1 per gun, 12-inch, 25-ton, to 7-inch, except 10·4-inch for guns behind shields only	
Ordnance, R.M.L., Special Implements.		
Ordnance, R.M.L., holder, tube	1 per 12·5-inch Mark II	For removing tube holder from vent.
Ordnance, R.M.L., wrenches, nut, vent, 17·72-in.	1 ,, ,, ...	For securing nut.
Ordnance, R.M.L., wrenches, plug, shutter ...	1 ,, ,, ...	For removing shutter plugs.
Ordnance, R.M.L., wrenches, shutter, 17·72-inch ...	1 per 12·5-inch Mark II and 10·4-inch	For removing fixing screws of shutters, and elevating plates and rivets.
Ordnance, R.M.L., stud, trunnion ...	1 per 12·5-inch Mark II.	
Planks, stacking projectiles, heavy...	1 per 3 guns or under, for 9-inch guns and over	For rolling projectiles on.
Plugs, vent	1 per gun (except 12·5-inch Mark II), and 10·4-inch.	To protect the vents of mounted guns at home stations and in cold climates.†

* Also used to traverse the dwarf platform when the rear trucks are furnished with holes in the circumference to receive the lever point.

† At Halifax the vents will be secured by tow steeped in Field's grease and capped with putty,

Digitized by Google

Equipment of R.M.L. 12·5-in. 12-in. (35 or 25-tons), 11-in., 10·4-in., 10-in., 9-in., 8-in., and 7-in. Guns—*continued.*

TABLE 4—*continued.*	Proportions.	Remarks.
Position-finders, depression, artillery	As authorised.	
Prickers, vent: 29-inch	2 per 12-inch 35-ton or 12·5-inch Mark I gun.	
Prickers, vent: 23-inch	2 per 9-inch up to 12-inch 25-ton guns, except 10·4-inch	
Prickers, vent: 17-inch	2 per 8-inch and 7-inch guns.	
Punches, vent: 22-inch ,,	1 per 10-inch and up to 12·5-inch Mark I guns inclusive, except 10·4-inch	Used for removing obstructions in vent channel.
Punches, vent: 17-inch ...	1 per 7-inch, 8-inch, and 9-inch guns	
Rammers, R.M.L.: (12·5-inch to 7-inch) 7 tons*	1 per gun on sliding carriage, except 10·4-inch	
Rammers, R.M.L.: 7-inch 6½ tons	1 per gun on 6-ft. parapet carriage and slide	For emplacements 75 feet above sea level.
Rammers, R.M.L.: 9-inch Moncrieff ...	1 per 9-inch gun on Moncrieff carriage.	
Rammers, R.M.L.: jointed, 7-inch: 6½-tons, 6-ft. parapet	1 per 7-inch 6½-ton gun on 6-ft. parapet carriage and slide	For emplacements below 75 feet
Rammers, R.M.L.: jointed, 7-inch: Moncrieff ...	1 per 7-inch gun on Moncrieff carriage.	
Range finders, depression	as authorised by para. 87	See list at pages 672 to 682.
Rimers, vent, axial	1 per 12·5-inch Mark II and 10·4-inch gun.	For rectifying axial vents.
Rods: test, loading	1 per 10·4-inch gun ...	To ascertain if shell has shifted in bore after loading at practice
Rods: vent 36-inch	1 per 12·5-inch gun	For cleaning the axial vents.
Rods: vent 20 ,, ...	1 ,, 10·4 ,, ,,	
Ropes: drag, heavy ... ... prs.	2 per work for all ordnance.	
Ropes: guide, rammer, R.M.L. ...	2 per rammer above 9-inch, also 7-inch with straight rammer†	To assist in loading.
Sabots, barrow, projectile, No. 1 ...	1 per 12·5-inch projectile	Where the No. 1 (Mark II) projectile barrow is used.
Scotches, medium	As required	For scotching up the ends of projectiles, *see* para. 633, page 615.
Screws, lanyard guide, preserving ...	1 per gun having lanyard guide fitted on right side only. 2 per gun, for guns prepared for lanyard guides on both sides.	

* In the case of 12·5-inch guns in casemates, an iron eye is fitted to the back of the head, for slinging the rammer. For 12·5-inch guns that can only be fired with blank charges during peace time at Station Practice, an additional rammer of Mark I pattern will be allowed; the Mark II pattern (§ 3840 L.C.) being too short in the stave for blank charges.

† Also for 9-inch guns mounted behind shields; rammers for these guns when requiring ropes with clips will be fitted locally.

Digitized by Google

Equipment of R.M.L. 12·5-in., 12-in. (35 or 25 tons), 11-in., 10·4-in., 10-in., 9-in., 8-in., and 7-in. Guns—*continued.*

TABLE 4—*continued.*	Proportions.	Remarks.
Screws, pin, friction, tube, preserving	2 per gun adapted for Naval service.	
Selvagees, projectile	2 per 9-inch gun and over	For hoisting projectile to muzzle.
Shot, R.M.L. ... ... } **Sights** ... ... }	... ...	*See* end of Table.
Skids — 6 ft. 8 in. × 6 in. × 4 in. ...	1 per carriage (7 feet recoil), fitted with rear roller jack	For keeping the carriage run back on its rollers when the rear roller jack is pumped up to preserve the leather packings.
Skids — 5 ft. 8 in. × 6 in. × 4 in. ...	1 per carriage (6 feet recoil), fitted with rear roller jack	
Slides, L. — R.M.L. (12·5-inch to 7-inch) casemate *or* dwarf small port medium, No. 7	According to description of work	Moncrieff slides are included with the carriages.
Slides, L. — R.M.L. barbette, 10·4-inch	1 per gun	
Slings, chain. 12 to 25 tons breech / muzzle	1 per heavy gyn.	
Spanners, hydraulic buffer — No. 2	1 per work or battery, except for 12·5-inch and 11-inch with tension buffers, and 12·5-inch small port 7 feet recoil and 12-inch 35-tons.	To release piston rod.
Spanners, hydraulic buffer — ,, 5	1 per work or battery for 12·5-inch small port 7 feet recoil and 12-inch 35 tons.	
Spanners, hydraulic buffer — ,, 6	2 per work	To remove screw plug.
Spanners, hydraulic buffer — ,, 21	1 per work or battery for 12·5-inch 38-ton guns with tension buffers	For adjusting tension buffers.
Spanners, hydraulic buffer — ,, 42 ... ... / ,, 43 ... ... / ,, 44	1 per battery, 10·4-inch.	
Spanners, hydraulic buffer — R.M.L. 11-inch or 12-inch special	1 per work or battery for 25-ton guns with tension buffers	For adjusting tension buffers.
Spanners — special for repair of rear roller jacks (set of 4) ... sets	1 per work for 12·5-inch carriages.	
Spanners — tightening chain, slide, R.M.L. 12·5-inch	1 to 5 guns or less (35- or 38-ton) per work	For adjusting lengths of running in and out chains of platforms.
Spanners — nut, friction, cone, gear, elevating, carriage, garrison, Moncrieff, R.M.L., 7-inch	1 per battery.	
Spikes, gun* — common	2 per gun	For spiking vents permanently.
Spikes, gun* — spring, A or B ...	1 per gun where required	For spiking vents temporarily.

* Only to be demanded for guns in advanced or exposed works.

Digitized by Google

Equipment of R.M.L. 12·5-in., 12-in. (35 or 25 tons), 11-in., 10·4-in., 10-in., 9-in., 8-in., and 7-in. Guns—*continued.*

TABLE 4—*continued.*	Proportions.	Remarks.
Sponges, R.M.L. (12·5-inch to 7-inch)* ...	1 per gun on sliding carriage.	
9-inch Moncrieff	1 per 9-inch gun on Moncrieff carriage.	
7-inch Moncrieff ...	1 per 7-inch gun on Moncrieff carriage.	
7-inch 6½ tons, 6-foot parapet ...	1 per 7-inch 6½-ton gun on 6-ft. carriage and slide	
Stages. loading	1 per gun	For each gun in C or D emplacement with sunken ways.
Staves end, R.M.L. 9-inch Moncrieff	1 per set of side arms for 9-inch guns on Moncrieff carriages	For lengthening the side arms. The construction of the Moncrieff pit does not allow of the use of a side arm with a long wood stave in one piece.
extractor, projectile, R.M.L. 7-inch	1 to every 3 7-inch guns on Moncrieff and 6 ft. parapet carriages in a work	For use with the extractor projectile, and worm wadhook.
Sticks, portfire	2 per battery for all ordnance	To hold lighted portfires.
Stores for moving, mounting, &c. heavy R.M.L. guns	*See* para. 90, and Appendix I.	18- to 38-ton guns.
Straps, tube box, long...	1 per garrison tube box.	
Tackles, gun, 3-inch white rope†	1 per 2 or less traversing slide when not fitted with traversing gear, if so fitted 1 per battery	For traversing the slide and running the gun back at drill, where there is no running back gear.
	1 per 2 guns or less, mounted on Moncrieff carriages per work	For running back the gun.
Tackles, loading, derricks‡ 12·5-inch§	1 per gun, 9-inch and over mounted in open works	For raising the projectiles to the muzzle.
10-inch‖ ...	1 per gun, 9-inch and over, mounted in emplacements provided with sunken ways and movable loading stages	For placing the projectiles on the loading stages.

N.B.—Spare Ordnance, Carriages, and Slides; component and spare parts of the same; and also spare stores, will be allowed specially.

* In the case of 38-ton guns in casemates, an iron eye is fitted to back of head for slinging the sponge.

† Consists of 16 fms. of 3-inch white rope, with 1 double and 1 treble 9-inch Admiralty blocks.

‡ For description and mode of application, *see* §§ 3907 and 4675, Lists of Changes.

§ For 12·5-inch, 12-inch, and 11-inch guns, 1 treble and 1 double block, with hooks, and 10 fms. of 2½-inch white rope.

‖ For 10-inch and 9-inch guns, 1 double and 1 single block, with hooks and 7½ fms. of 2-inch white rope.

Digitized by Google

Equipment of R.M.L. 12·5-in., 12-in. (35 or 25-tons), 11-in., 10·4-in., 10-in., 9-in., 8-in., and 7-in. Guns—*continued.*

TABLE 4—*continued.*	Proportions.	Remarks.
Tackles, loading,* shields { 12·5-inch† / 10-inch‡ ...	1 per gun, 9-inch and over, mounted behind shields 2 per gun, mounted on turntable	For raising the projectiles to the muzzle. 1 for front and 1 for rear loading.
Tackles, slinging side arms§ prs.	1 per 12·5-inch gun in casemates	For slinging side arms to roof of casemate.
Tampeons, R.M.L. (12·5-inch to 7-inch)	1 per gun	For the muzzle; to protect the bore.
Tommies, contact	1 per 10·4-inch gun.	
Trestles, loading	1 per 11-inch and 12-inch 25-ton guns in "C" emplacements, without sunken ways	For supporting the side arms when loading.
Trollies { loading ... ... / magazine	4 per 10·4-inch gun ... 1 per 10·4-inch gun ...	For loading. For projectiles.
Turnscrews, slide, R.M.L. 12·5-inch	1 to 5 guns or less, 35 and 38-ton per work	For connecting running in and out chains of slides.
Ventservers‖	2 per gun (except 12·5-inch Mark II and 10·4-inch)	To place in the vent while loading, also for plugging the vents of guns mounted in warm climates, the lanyard being removed for this purpose.
Wadhooks, R.M.L. { (12·5-inch to 7-inch) ... / 9-inch Moncrieff ...	1 to every 3 guns, except 10·4-inch, in a work or battery, according to calibre**	For drawing charge and searching the bore.

* See note ‡, page 749*a*.

† For 12·5-inch, 12-inch, and 11-inch guns, 1 treble block with shackle (except in certain works mentioned in Appendix I, where a special block with large hook is required), and 1 double block with hook, and 10 fms. of 2½-inch white rope.

‡ For 10-inch and 9-inch guns, 1 double block with shackle and 1 single block with hook, and 7½ fms. of 2-inch white rope.

§ Consists of:—

Vocabulary Section IV.

Cordage, hawser, 3-strand, white, 1½-inch (lengths of 10 feet)... ... 2

Vocabulary Section V (1).

Balls, tackle, slinging side arms	1	Hooks, tackle, slinging side arms	1
Blocks, loading tackle, No. 8 ...	1	Rings, tackle, slinging side arms	2
Eyes, tackle, slinging side arms	1		

The ropes are connected by a ring, having at one end another ring, and at the other end a ball and a hook, the latter to fit into the small eye in the rammer or sponge head. Where 2-inch tarred rope is in use with these tackles it will not be replaced until worn out.

‖ Whipcord should be demanded separately for making the lanyards.

** If additional wadhooks are required for drill, they must be collected from other guns.

Digitized by Google

Equipment of R.M.L. 12·5-in., 12-in. (35 or 25 tons), 11-in., 10·4-in., 10-in., 9-in., 8-in., and 7-in. Guns - *continued.*

TABLE 4—*continued.*	Proportions.	Remarks.
Wads, wedge { 9-inch	12·5-inch to 9-inch } 1 per round	Placed in front of the projectile to prevent its shifting.
{ 8 ,, ...	8-inch and 7-inch } except case shot	
Wheels { transporting, No. 85 ...	1 pair for each district or group of sub-districts (such as Isle of Wight or Portland) where required, and roads are suitable	*See* Axletrees.
{ trolley, loading	2 per trolley	For loading.
Worms, wadhook, No. 1	1 per 3·7-inch guns for jointed stave in a work.	
Wrenches { knock up, G.S. ...	1 per work, 2 if over 10 traversing slides.	For tightening nuts; available for all natures of traversing slides.
{ pivot { No. 1	1 per battery	For fixing the elevating racks of 7-inch guns and upwards, and the muzzle derricks and index plates of 9-inch guns and upwards.
{ pivot { ,, 4	1 per battery, except 12·5-inch Mark II and 10·4-inch	For fixing screws of reflecting sights and elevating plates, and for removing pivots.
{ sight { acorn, R.M.L.	1 per battery	For fixing and removing the G.H.J. (acorn) sights
{ sight { S.B.	1 per battery	For securing readers.
Vocabulary Section V. (2).		
Bags { burster, R.M.L., common (12·5-inch to 7-inch)	1 per empty shell.	
{ primer, filled, 7 drams ...	3 per empty common shell.	
Bearers, cartridge cylinder*... ...	2 per gun...	For carrying and opening cylinders 10-inch and upwards. For opening cylinders 9 and 7-inch.
Boxes, tube { garrison	1 per gun (except 12·5-inch Mark II and 10·4-inch)	For friction tubes.
{ vent-sealing, garrison ...	1 per 12·5-inch Mark II and 10·4-inch guns	To be hung up on the walls of the casemate as a receptacle for 1 tin box of tubes.

* These are only required when the cartridge stores are far from the guns.

Digitized by Google

Equipment of R.M.L. 12·5-in., 12-in. (35 or 25 tons), 11-in., 10·4-in., 10-in., 9-in., 8-in., and 7-in. Guns—*continued.*

TABLE 4—*continued.*

			Proportions. Per Palliser shot.	Per Shell.	Per Round of case shot.		Remarks.
Cartridges, R.M.L., filled, serge or silk cloth	12·5-inch	82½ lb. *a*	2	2	2	½-charge, Mark I gun.	All the cartridges in Royal Artillery charge will be kept filled as far as store accommodation will admit. *See* para. 71.
		50* ,, *a*	4	4	4	¼-charge, Mark II gun.	
	12 ,,	110 ,, ...	1	1 *b*	1	35-ton gun.	
		85 ,, ...	1	1 *c*	1		
		55 ,, ...	—	1 *d*	—		
	11 ,,	85 ,, ...	1	1 *e*	1		
		60 ,, ...	—	1 *d*	—		
	10·4 ,,	95 ,, *a*	1	1	1		
	10 ,,	70 ,, ...	1	1 *e*	1		
		44 ,, ...	—	1 *d*	—		
	9 ,,	25 ,, *a*	2	2 *f*	2	½-charge†	
		33 ,, ...	—	1 *d*	—		
	8 ,,	35 ,, ...	1	1 *e*	1		
		21 ,, ...	—	1 *d*	—		
	7 ,,	30 ,, ...	1	1 *g*	1		
		17 ,, ...	—	1 *h*	—		

a. Silk cloth only.
b. Studless common and Shrapnel shell, and studded common shell not fitted for gas checks, except Mark I and II.
c. Studded common Mark I and II and Shrapnel shell 35-ton gun, also studless common and Shrapnel shell, and Palliser and case shot, 25-ton gun.
d. Studded common shell fitted for gas checks, and studded Shrapnel shell.
e. Studless common and Shrapnel shell, and studded common shell not fitted for gas checks.
f. Studless common and Shrapnel shell, and studded common and Shrapnel not fitted for gas checks, and Mark VI studded common shell.
g. Studded common shell.
h. Studded Shrapnel shell.

* 47½ lb. (¼) charges Prism 2 will be used for practice.
† The 50 lb. charges will be first used up.

Digitized by Google

Equipment of R.M.L. 12·5-in., 12-in. (35 or 25 tons), 11-in., 10·4-in. 10-in., 9-in., 8-in., and 7-in. Guns—*continued.*

TABLE 4—*continued.*	Proportions.	Remarks.
Cylinders, cartridge	As required.	
Fuzes* percussion direct action,† No. 3	1 per common shell 8-in. and over.	Issued in cylinders containing 5 each.
Fuzes* percussion Pettman, G.S., No. 5	1 per 7-in. common and double shell.	
Fuzes* time 15 seconds, M.L.,‡ No. 41	1 per Shrapnel shell over 10-inch, also 7-in.	
Fuzes* time 15 seconds, with detonator, No. 42	1 per Shrapnel shell 8-in., 9-in., and 10-in.	
Gas-checks. R.M.L. (12·5-inch to 9-inch)	1 per studless projectile, and 1 per studded Palliser or common 9-inch to 12·5-inch, and Shrapnel 12·5-inch.	For fixing to the base of the projectile.
Gauges, shell, ring, R.M.L. body and gas checks (12·5-in. to 9-in.)	1 per sub-district, per calibre.	
Gauges, shell, ring, R.M.L. (body and studs, 12·5-in. to 7-in., except 10·4-in.)		
Grummets, projectile...	1 per studless Palliser shot, and studless common and Shrapnel 12·5 inch.	For protecting base.
Gunpowder rifle pistol, R.F.G., *or* R.F.G.² lb.	Sufficient to fill shells supplied empty§	Bursters of Shrapnel shell and powder horns.
Gunpowder shell (P, L.G., *or* F.G.) lb.		Bursters of shell except Shrapnel.
Hooks, cam, with sling	1 pair per landing place where there are cranes	To be borrowed when required from the Ordnance Store Department, and will not form part of the equipment.
Implements, fuze and shell Extractors, fuze, small rifled	1 per gun...	For extracting wood fuzes.
Implements, fuze and shell Bits, hook borer ...	6 per gun...	
Implements, fuze and shell Cylinders, common	1 per gun...	For guns with Shrapnel shell only.
Implements, fuze and shell Handles, hook borer	1 per gun...	
Implements, fuze and shell Hooks, hook borer ...	1 per gun...	
Implements, fuze and shell Keys, fuze, universal	2 per gun...	The second Key is required, when Mark III direct action fuzes are used.
Implements, fuze and shell Spanners, gas-check, nut, 7-inch	1 per gun...	For 7-inch guns and over.
Implements, fuze and shell Wrenches, base plug	1 per gun.	

* The designation number is shown on the label of the cylinder or other package in which the fuze is packed. The number stamped on the fuze itself denotes the number of the thousand manufactured.

† Pettman, G.S., may be used with 9-in., 10-in. and 12-in. studless shell and full charges.

‡ Will replace the 9 seconds fuze when the store is used up.

§ If the gunpowder demanded according to regulated weight of bursting charges proves insufficient to completely fill the shells, additional powder will be supplied, but the circumstances should be fully explained on the requisition.

** The "keys fuze, and plug G.S." now on charge will first be used up.

Digitized by Google

Equipment of R.M.L. 12·5-in., 12-in. (35 or 25 tons), 11-in., 10·4-in. 10-in., 9-in., 8-in., and 7-in. Guns—*continued.*

TABLE 4—*continued.*	Proportions.	Remarks.
Levers, grummet	2 per gun.	For removing grummets from base of projectiles.
Match { quick	½ lb. per work, in tin cylinder	For general purposes.
Match { slow ... ... lbs.	1 per 100 rounds... ...	For lighting portfires, &c.
Portfires, common	2 to 100 rounds of ammunition	For general use.
Plugs, fuze hole, G.S.	1 per shell.	
Primers, Shrapnel shell	1 per empty Shrapnel shell	Issued in cylinders containing 10 each.
Shells	... ...	*See* end of Table.
Tubes* { electric, No. 10 ...	1 per round for 9-inch guns and over, except axial vented guns, in connection with position finders.	
	10 per 100 rounds for 9-inch guns and over, except axial vented guns, not in connection with position finders.	
friction, copper, solid drawn	1 per round for 9-inch guns and over, except axial vented guns, not in connection with position finders.	
	10 per 100 rounds for 9-inch guns and over, except axial vented guns, in connection with position finders.	
	1 per round for 7-inch and 8-inch guns.	
vent-sealing, electric, P	1 per round for 10·4-inch guns.	
vent-sealing, electric, V	1 per round for 12·5-inch Mark II guns in connection with position finders.	
	10 per 100 rounds for 12·5-inch Mark II guns not in connection with position finders.	
vent-sealing, friction, V	1 per round for 12·5-inch Mark II guns not in connection with position finders.	
	10 per 100 rounds for 12·5-inch Mark II guns in connection with position finders.	

* After being fired the tubes will be returned to store and forwarded to Woolwich as old metal.

Digitized by Google

Equipment of R.M.L. 12·5-in., 12-in. (35 or 25 tons), 11-in., 10·4-in., 10-in., 9-in., 8-in., and 7-in. Guns—*continued.*

TABLE 4—*continued.*	Proportions.	Remarks.
Vocabulary Section VII. (1).		
Batteries* { Le Clanché, firing, 3 cell	1 per gun, 9-inch and upwards.	For firing purposes.
Batteries* { Menotti, test	1 per district.	For testing tubes.
Stands. telescope, 2½-inch socket	1 per work for coast batteries where a flag is displayed by regulation	These may also be allowed to important works when specially recommended.
Telescopes. 3 feet		
Wire. covered, C S ... ... yds.	50 per gun	For firing purposes.

* As these Batteries become unserviceable, they will be replaced by the "Battery and and Key, firing and test."

The proportions of projectiles given in Classes I and II have been assigned on the assumption that the guns will be placed only on sea defences approachable by ironclad vessels; that the occasions where their fire might be required to aid in the land defences would be exceptional; that they might be opposed to wooden as well as to iron ships, and that they would generally (except in Class II). be supported by auxiliary fire or by guns of smaller calibre bearing on the same field, capable of maintaining a rapid fire, and suitable for repelling the landing of troops within short ranges.

	Class I. Guns supported by auxiliary fire, or by guns of smaller calibre bearing on the same field.		Class II. Guns unsupported (or practically unsupported) by auxiliary fire.		Class III. Guns which only fire on land fronts.	Remarks.
	8-inch and upwards.*	7-inch.	8-inch and upwards.	7-inch.	Such as the 7-inch guns at Hoo Fort.	
Shells, R.M.L.† { common‡	50	70	40	70	45	Per 100 rounds.
Shells, R.M.L.† { Shrapnel	—	20	15	15	45	Per 100 rounds.
Shot, R.M.L. { case§ ...	—	—	10	10	20	Per 100 rounds.
Shot, R.M.L. { Palliser	50	10	40	10	—	Per 100 rounds.

* The proportions for the Spithead Forts will be:—Common shells 45, Case shot 5, and Palliser shot 50.

† Supplied with fuze hole plugs, which, however, are separately shown and are to be separately charged and accounted for.

‡ One unloading hole plug and wad is issued in each common shell made prior to January, 1873; they are never to be removed, unless it becomes necessary to withdraw the charge from a shell, in the fuze hole of which a percussion fuze has become fixed and cannot be taken out without risk of explosion. *See* List of Changes, paragraph 2426, abolishing unloading holes in shells after January, 1873.

§ 2 shot per round except 12·5-inch.

N.B.—Studded shells only issued for 8-inch guns.

Digitized by Google

Sights for R M.L. Guns.

(*Referred to at page* 749.)

TABLE 4—*continued.*

Sights, R.M.L.				12·5-inch. Mark I.	12·5-inch. Mark II.	12-inch. 35 tons.	12-inch. 25 tons.	11-inch.	10·4-inch.	10-inch.	9-inch.	8-inch.	7-inch.	Remarks.
	fore	G		3	3	3	—	—	—	*1α	*1α	*1α	—	α Centre.
		H		—	—	—	*3†	*3†	—	2	2	2	*1	
		J		—	—	—	—	—	—	—	—	—	2b	b Sides.
	hind, centre			—	—	—	*1	*1	—	*1	*1	*1	*1	
	reflecting	counter-weight carriage	Mark I	fore	—	—	—	—	—	—	—	—	1	Counterweight carriage Mark I.
				hind	—	—	—	—	—	—	—	—	1	
			Mark II	lower	—	—	—	—	—	—	1	—	1	Counterweight carriage Mark II.
				upper	—	—	—	—	—	—	1	—	1	
		fore			2	2	—	—	—	—	—	—	—	For "small port" mounting only.
		hind (with tangent scale, bar, and clamp bracket with reflector)			2	2	—	—	—	—	—	—	—	
	tangent				3	3	3	2	2	—	2	2	2	2	

* Only when mounted behind shields.
† 2 only required when not mounted behind shields.

Digitized by Google

EQUIPMENT OF R.M.L. 6·6-INCH, 80-PR. (CONVERTED), 64-PR. (WROUGHT-IRON OR CONVERTED), AND 40-PR. GUNS.

Armament of Works.

TABLE 5.	Proportions.	Remarks.
Vocabulary Section II. (2).		
Drugs, gun, 5 tons	1 per District	Suitable for all ordnance up to 5 tons. *See* note *, page 742.
Limbers, sling wagon, 6 tons... **Wagons,** sling, 6 tons	1 per District, if necessary.	Available also for B.L. and S.B. ordnance. *See* note *, page 742.
Vocabulary Section III.		
Cans, oil, lubricating, smiths...	1 per 6 guns or less per work	Globular can with fine spout.
Chests, tool, filled { No. 11 A	1 per work.	
,, 4 C...	As authorised. *See* para. 174.	
Forges, field, R.A., Mark IV	As authorised. *See* para. 174.	
Hammers, claw, 28 oz.	2 per battery for all ordnance.	For general use.
Spanners, McMahon, 15-inch...	1 per battery for all ordnance.	For tightening nuts, &c.
TOOLS, ORDNANCE.		
Tools { cleaning, examining and painting ordnance, sets	1 per District	According to the nature of ordnance in the district. For detail of tools *see* pages 616 to 619.
venting ordnance sets	As authorised. *See* para. 174.	For detail of tools *see* pages 700 to 704.
Vocabulary Section IV.		
Brushes, water, carriage ...	2 per gun	1 for cleaning the sponge, and 1 for projectiles in gun emplacement.
Candles, magazine*	1 lb. per fighting lantern.	
Oil, mineral ... gallons	Sufficient to fill the hydraulic buffer.	
Chalk, white ... ... lbs.	2 per gun	Annual supply.
Miscellaneous Stores.		
Cordage { hawser, 3 strand, 1¼-inch, white, fathoms	4 per 80 or 64-pr. mounted on blocked up slides	For rammer ropes.
spunyarn, fathoms	1 ,, ,,	For securing rammer ropes to end of stave.
Covers, tarpaulin	1 per Moncrieff mounting	For protection of elevating and brake gear.
Handbooks, { for ordnance ... ,, rangefinder	... ...	*See* para. 191, page 524.

* Supplied by Army Service Corps.

Digitized by Google

Equipment of R.M.L. 6·6-in., 80-pr. (Converted), 64-pr. (Wrought-iron or Converted), and 40-pr. Guns—Armament of Works—*continued.*

TABLE 5—*continued.*	Proportions.	Remarks.
Vocabulary Section V. (1).		
Apparatus. anchoring, carriage, hydro-pneumatic	1 per carriage	For 6·6-in. gun on siege carriage.
Axletrees, transporting, slide, L. (iron, R.M.L. 7-inch (for medium slide No. 9) / medium, wood ...	1 for wood and 1 for iron slide for each District or group of sub-districts (such as Isle of Wight or Portland) where required, and roads are suitable.	A further supply will be allowed, when necessary, on special representation. Those for wood slides as well as their limbers and wheels, are available also for the R.B.L. and S.B. ordnance.
Bags, extractor, projectile, 9-inch	1 per extractor	To cover the head.
Bearers, shot, R.M.L.	1 per 6·6-in. and 80-pr. guns	Used for loading.
Boards, range, fuze scale ...	1 per 2 guns of same nature, or 1 per gun where mounted singly	To be prepared locally.*
Brushes, piasaba, R.M.L. (80-pr. ... ... / 6·6-inch ... ... / 40-pr. ... ...)	For 80- and 64-prs. / For 6·6-in. / For 40-pr. — 1 per battery from which practice is carried on.	For cleaning out the grooves.
Buckets, sponge, garrison ...	1 per 2 guns	To hold water for damping the sponge.
Buffers, hydraulic, circular ...	... ...	For No. 8 medium slide, 64-pr. fitted with circular buffers.
Buffers, hydraulic, circular — (Special Implements.)		
Rings...	1 per battery ...	Metal, guide, leather packing.
Spanners (No. 1 ... ... / „ 2 ... ...)		Box, piston, and valve block.
Wrenches („ 1 ... ... / „ 2 ... ...)		Locking valve. Gland rings. And screw-driver, securing valve and valve block, with tommy.
Caps, sponge† (No. 7 ... ... / „ 8 ... ... / „ 9 ... ...)	1 per 40-pr. sponge / 1 per 80- or 64-pr. sponge / 1 per 6·6-in. sponge where necessary	To protect sponge head.

* The fuze scale is either painted on the board, or printed on paper and attached to the board.

† Only to be used for sponges in transit or where stores are damp.

Digitized by Google

Equipment of R.M.L. 6·6-in., 80-pr. (Converted), 64-pr. (Wrought-iron or Converted), and 40-pr. Guns—Armament of Works—*continued.*

TABLE 5—*continued.*	Proportions.	Remarks.
Carriages, garrison, R.M.L. 64-pr. 71 to 58 cwt., common	1 per gun, according to description of mounting approved	No. 1 (iron), No. 2 (iron), or wood. 64-pr. 58 cwt. Wood carriages are fitted with Allen brakes.
Carriages, garrison, R.M.L. 64-pr. 58 cwt. depression		
Carriages, garrison, R.M.L. 64-pr. 58 cwt. Moncrieff		
Carriages, garrison, sliding medium (Nos. 8, 9, 10, 11, 12, 13, 14, 21, 22, 23, 24, and 25).		
Carriages, siege, R.M.L. 6·6-inch gun*		
Carriages, siege, R.M.L. 40-pr. ...		
Carriages, siege, R.M.L. 6·6-inch gun (SPECIAL IMPLEMENTS.)		
Drivers, screw	1 per 6·6-in. carriage.	
Keys, box, set screw ...	1 ,, ,,	
Keys, box, union ...	1 ,, ,,	
Keys, gland	1 ,, ,,	
Keys, plug	1 ,, ,,	
Keys, T	1 ,, ,,	
Mallets	2 ,, ,,	
Spanners, double ended, 1-in. and $\frac{7}{8}$-in.	1 ,, ,,	
Spanners, double ended, $\frac{3}{4}$-in. and $\frac{5}{8}$-in.	1 ,, ,,	
Spanners, $1\frac{1}{8}$-in. lock nut ...	1 ,, ,,	
Spanners, $1\frac{1}{4}$-in. lock nut and air plug socket, 2-inch ...	1 ,, ,,	
Tommies	1 ,, ,,	
Cases, cartridge, No. 4	2 per gun	To bring filled cartridges to gun in action.
Clamps, tangent sight B ...	2 per 6·6-in., 80-pr., or 64-pr., 71 or 64 cwt.	
Clamps, tangent sight D ...	2 per 40-pr.	
Clinometers, garrison	1 per work...	For measuring angles, and ascertaining quadrant elevation.
Clippers, portfire...	1 per battery, for all ordnance.	To cut lighted portfires.
Covers, sight, R.M.L., reflecting ... ... lower	1 per carriage ...	For protecting sights, 64-pr. R.M.L., counter-weight carriages, Mark II.
Covers, sight, R.M.L., reflecting ... ... upper		

* The liquid at present in use in cylinders of 6·6-inch H.P. carriage is:—

Methylated spirits	7 gallons.
Water, distilled	3$\frac{1}{2}$,,
Oil, mineral	$\frac{1}{4}$,,
Soda, carbonate	250 grains.

Digitized by Google

Equipment of R.M.L. 6·6-in., 80-pr. (Converted), 64-pr. (Wrought-iron or Converted), and 40-pr. Guns—Armament of Works—*continued*

TABLE 5—*continued.*

	Proportions.	Remarks.
Derricks, loading, slide — medium — No. 8 ...	1 per 64-pr. mounted on 5 ft. 6 in. or 6 ft. parapet carriage and slide.	Fitted to the slide.
Derricks, loading, slide — medium — ,, 9 ...	1 per 64-pr. mounted on 5 ft. 6 in. or 6 ft. parapet carriage and slide.	Fitted to the slide.
Derricks, loading, slide — R.M.L. 80-pr. — 6 ft. parapet	1 per 80-pr. mounted on 5 ft. 6 in. or 6 ft. parapet carriage and slide.	Fitted to the slide.
Derricks, loading, slide — R.M.L. 80-pr. — 5 ft. 6 in. parapet	1 per 80-pr. mounted on 5 ft. 6 in. or 6 ft. parapet carriage and slide.	Fitted to the slide.
Extractors, projectile, R.M.L. — 80 pr. ...	2 per battery	Also for 6·6-in. gun.
Extractors, projectile, R.M.L. — 64 pr. ...	2 per battery	Also for 6·6-in. gun.
Flags, red, 12 ft. × 6 ft. ...	1 for each practice battery.	*See* para. 100 and App. IV.
Gyns, triangle, with appurtenances, light	1 per sub-district or 2 if more than 3 works (in exceptional positions, if more are considered necessary they must be specially applied for).	Available for all ordnance of 7 tons and under. For complete set of stores *see* note †, page 745.
Handspikes — common — 7 ft. ...	2per rear chock carriage	64-prs. only.
	2 ,, sliding ,,	80-prs. only.
	5 ,, travelling ,,	6·6-in. only.
Handspikes — common — 6 ft. ...	2 ,, sliding ,,	64-prs. and 40-prs.
	5 ,, common or travelling siege carriage.	64-prs. and 40-prs.
Handspikes — metal roller 7 ft. L.S.	2 per wood sliding carriage.	To run the gun up.
Handspikes — wood roller, 6 ft. ...	1 per rear chock carriage	To run the gun up.
Horns, powder*	1 per battery, for all ordnance.	For priming guns if required.
Indicators, pressure, spring, R.M.L. 6·6-in. gun.	1 per 6·6-in. carriage.	
Lanterns, fighting	2 per casemate	For candles, *see* page 757.
Lanyards, friction tube — garrison — No. 2	3 per gun on Moncrieff carriages.	
Lanyards, friction tube — garrison — ,, 3	3 per gun on sliding carriages.	
Lanyards, friction tube — siege, No. 1 ...	3 per 40-pr. gun on siege carriage.	
Levers — iron shod — crow, 7 ft.	1 per work for all ordnance.	For drawing bolts, &c.
Levers — iron shod — slide, 4 ft.	2 per gun on sliding carriage.	For traversing the slide.
Levers — pointed, No. 2. ...	2 per gun on carriages with rear eccentrics.	For running up the gun.
Levers — pointed, No. 2. ...	3 per gun on Moncrieff carriage.	For running up the gun.
Limbers — siege, R.M.L. 6·6-in. gun ...	1 per carriage	For 6·6-in. or 40-pr. siege carriages.
Limbers — siege, R.M.L. 40-pr. ...	1 per carriage	For 6·6-in. or 40-pr. siege carriages.
Limbers — transporting slide L. iron ...	1 for wood, and 1 for iron slide in each district or group of sub-districts (such as Isle of Wight or Portland) where required, and roads are suitable.	*See* Axletrees.
Limbers — transporting slide L. medium	1 for wood, and 1 for iron slide in each district or group of sub-districts (such as Isle of Wight or Portland) where required, and roads are suitable.	*See* Axletrees.

* Contains 1½ lbs. of gunpowder, included in the proportions at page 76[4].

Digitized by Google

Equipment of R.M.L. 6·6-in., 80-pr. (Converted), 64-pr. (Wrought-iron or Converted) and 40-pr. Guns—Armament of Works—*continued.*

TABLE 5—*continued.*

	Proportions.	Remarks.
Linstocks	1 per battery for all ordnance.	To hold lighted slow match.
Measures, hydraulic buffer, filling	1 per work where required.	For filling the hydraulic buffer.
Ordnance, R.M.L. 6·6-in. ... ... 80-pr. ... ... 64-pr. 71 cwt., 64 cwt., or 58 cwt. 40-pr.	As authorised ...	For Fittings, *see* page 852; and for Sights, page 762.
Ordnance, R.M.L., sockets, sight centre A hind B	1 per 64-pr. 64 cwt. 1 per 64-pr. 58 cwt.	
Packings, cylinder, carriage, siege, R.M.L. 6·6-inch gun, sets	1 per 6·6-in. gun.	
Pedestals, carriage garrison, common, R.M.L. 64-pr. 58 cwt. medium, No. 6, No. 15, No. 22, or No. 23	1 per carriage fitted with elevating screw	To replace elevating screw when removed.
Plates, ground, siege	1 set of 3 per carriage ...	For wheels and trail of 6·6-in. siege carriage.
Platforms, siege Clerk's ... ... double-decked* ...	1 per 40-pr. on travelling carriage. 1 per 6·6-in. gun.	
Plugs, vent	1 per gun	To protect the vent at home stations and in cold climates.†
Prickers, vent, 12-in.	1 per gun	To clear the vent.
Pumps, air, R.M.L. 6·6-in. gun	1 per 6·6-in. carriage ...	For charging the cylinder of hydro-pneumatic carriage.
Punches, vent 12-inch ... 8-inch ...	1 per 6·6-inch, 80-pr., and 64 pr. gun. 1 per 40-pr. gun.	
Rammers jointed 6·6 - in. gun 64-pr. ... 80-pr. ... ... 64-pr. ... ... 40-pr.	1 per gun on Moncrieff, H.P., or medium No. 8 or No. 9 carriages. 1 per gun on other carriage.	
Ropes, drag, heavy ... pairs	2 per work for all ordnance.	
Scotches, medium	As required.	
Screws, lanyard guide, preserving	1 per gun having lanyard guide fitted on right side only. 2 per gun, for guns prepared for lanyard guides on both sides.	For scotching up the ends of piles of projectiles. *See* paragraph 633.
Selvagees, ordinary	2 per 6·6-in. and 40-pr. guns, and 64-pr. gun on Moncrieff carriage.	

* To be kept in Ordnance Store charge, and demanded and laid by Royal Engineers as required. Should accommodation exist on the works in which they would have to be laid, arrangements should be made to have them stored there and taken charge of, for the Ordnance Store Department, by the Master Gunner.

† At Halifax the vents will be secured by tow steeped in Field's grease and capped with putty.

Digitized by Google

Equipment of R.M.L. 6·6-in., 80-pr. (Converted), 64-pr. (Wrought-iron or Converted), and 40-pr. Guns—Armament of Works—*continued.*

TABLE 5—*continued.*	Proportions.	Remarks.
Shot, R.M.L. — case — 6·6-inch... ...	2 per cent.	
case — 80-pr.	10 ,, ,, ...	Also for 64 pr.
case — 40-pr.	4 ,, ,,	
Palliser, 6·6-inch ...	10 ,, ,,	
Sights, R.M.L.* — crossbar — fore — 6·6-inch ...	1 per 6·6-inch gun.	
crossbar — fore — 40-pr. 35 cwt.	1 per 40-pr. gun.	
crossbar — tangent — 6·6-inch	1 per 6·6-inch gun.	
crossbar — tangent — 40-pr. 35 cwt.	1 per 40-pr. gun.	
fore — B	2 per 40-pr. gun.	
fore — C	1 per 64-pr. 64 cwt. gun.	
fore — D	2 per 6·6-inch, 80-pr., 64-pr. 71 cwt., and 64-pr. 64 cwt. guns.	
fore — centre, 64-pr. 58 cwt.	1 per 64-pr. 58 cwt. gun.	
hind centre, 64-pr. — 64 cwt. ...	1 per 64-pr. 64 cwt. gun.	
hind centre, 64-pr. — 58 cwt. ...	1 per 64-pr. 58 cwt. gun.	
muzzle, 64-pr. 58 cwt. ...	1 per 64-pr. 58 cwt. gun.	
reflecting — counter-weight carriage Mk. II — lower, 64-pr. 58 cwt. / upper, 64-pr. 58 cwt.	1 per 64-pr. 58 cwt. gun when mounted on Moncrieff carriage.	
reflecting — hind, 6·6-inch ...	2 per 6·6-inch gun.	
tangent — 6·6-inch	2 per 6·6-inch gun.	
tangent — 80-pr.	2 per 80-pr. gun.	
tangent — 64-pr. — 71 cwt. ...	2 per 64-pr. 71 cwt. gun.	
tangent — 64-pr. — 64 cwt. ...	2 per 64-pr. 64 cwt. gun.	
tangent — 40-pr.	2 per 40-pr. gun.	
Slides, L., medium, No. 8, No. 9, No. 10, No. 11, No. 12, No. 13, No. 14, No. 16, No. 18, No. 19, and No. 20	1 per sliding carriage according to description of work.	Moncrieff slides are included with the carriages.
Spanners, hydraulic buffer — No. 2 ... / No. 3 ...	1 of No. 2. or 1 of No. 3 per battery where required.	To release piston rod.
Spanners, hydraulic buffer — No. 6 ...	2 per battery where required.	To remove screw plug.
Spikes, gun — common	2 per gun	For spiking vents permanently.
Spikes, gun — spring, B, C, *or* D†	1 per gun when required	For spiking vents temporarily.
Sponges, R.M.L. — 6·6-inch...	1 per 6·6-inch gun.	
Sponges, R.M.L. — 64-pr. — wire rope stave, 58 cwt.	1 per 64-pr. 58 cwt. gun on Moncrieff carriage or on 5-ft. 6-in. or 6-ft. parapet carriage.	
Sponges, R.M.L. — 64-pr. — wood stave, 58 cwt.	1 per gun on other carriage.	Also for 64-pr., 71 cwt. and 80-pr.
Sponges, R.M.L. — 64 pr., 64 cwt. — wire rope stave — A and B chambers	1 per gun.	
Sponges, R.M.L. — 64 pr., 64 cwt. — wire rope stave — C and D chambers	1 per gun.	

* Screws, preserving, are placed in all fixing screw and other holes in the guns when the fittings are removed for storage or transport.

† Only to be demanded for guns in advanced or open works.

Digitized by Google

Equipment of R.M.L. 6·6-in., 80-pr. (Converted), 64-pr. (Wrought-iron or Converted), and 40-pr. Guns—Armament of Works—*continued.*

TABLE 5—*continued.*	Proportions.	Remarks.
Sponges, R.M.L. 64-pr., 64 cwt., wood stave — A and B chambers	1 per gun.	
Sponges, R.M.L. 64-pr., 64 cwt., wood stave — C and D chambers	1 per gun.	
Sponges, R.M.L. 40-pr., wood stave	1 per 40-pr. gun.	
Sticks, portfire	2 per battery for all ordnance.	To hold lighted portfires.
Straps, tube box, long	1 per tube box.	
Tackles gun, 2½-inch tarred rope*	2 per 2 or less slides, L.	For running the gun back at drill.
Tackles luff, 14 fathoms ...	2 per 2 or less Moncrieff carriages.	For running the gun back at drill.
Tackles whip upon whip ...	1 per 2 or less common standing carriages.	For running the gun back at drill.
Tackles hauling down, R.M.L., 64-pr. gun.	1 per gun mounted on slides, medium Nos. 18 and 20.	For depressing the gun.
Tampeons, R.M.L.§ 6·6-inch	1 per 6·6-in. gun	To protect the bore.
Tampeons, R.M.L.§ 80-pr.	1 per 80 or 64-pr. gun ...	To protect the bore.
Tampeons, R.M.L.§ 40-pr.	1 per 40-pr. gun.	To protect the bore.
Vent-servers †	2 per gun	To place in the vent while loading; also for plugging the vents of guns mounted in warm climates; the lanyard being removed for this purpose.
Wadhooks R.M.L. 7-in. 6½ tons.	for 64-pr., 64 and 71-cwt. — 1 per every 3 guns in a work.‡	For drawing the charge and searching the bore.
Wadhooks R.M.L. 40-pr. ...	for 80-pr. and 64-pr., 58-cwt. — 1 per every 3 guns in a work.‡	For drawing the charge and searching the bore.
Wadhooks S.B. 8-in. gun ...	for 80-pr. and 64-pr., 58-cwt. — 1 per every 3 guns in a work.‡	For drawing the charge and searching the bore.
Wads, wedge, 8-inch	1 per round, except case shot; for 80-pr. and 64-pr.	Placed in front of the projectile to prevent its shifting.
Wheels, transporting, No. 85 *or* No. 86.	1 pair for each transporting axletree in each District or group of sub-districts (such as Isle of Wight or Portland) where required, and roads are suitable.	*See* Axletrees. No. 85 for axletree of iron slide, L; No. 86 for axletree of wood slide, L.
Wrenches forked, slide, L, wood, medium.	1 per District	For altering the flanges, &c.; available also for all wood slides, L.
Wrenches knock-up, G.S.	1 per work; 2 if over 10 slides, L.	For tightening nuts, &c.; available also for all natures of slides, L.

* Also available for traversing, when necessary, the 64-pr. R.M.L. guns on 6 ft. parapet (blocked up) slides other than those on C pivot.

† Whipcord should be demanded separately for making the lanyards.

‡ If additional wadhooks are required for drill, they must be collected from other guns.

§ A junk wad should be demanded for, and attached to each tampeon.

Digitized by Google

Equipment of R.M.L. 6·6-in., 80-pr. (Converted), 64-pr. (Wrought-iron or Converted), and 40-pr. Guns—Armament of Works—*continued*.

TABLE 5—*continued*.	Proportions.	Remarks.
Wrenches, pivot, No. 4	1 per battery	For removing and fixing elevating plates, and reflecting sights, 64-pr. R.M.L., on Moncrieff carriages; also for removing fittings of 40-pr. guns.
Wrenches, sight, R.M.L., fore, 12·5-in.	1 per 10 guns, or less per work.	For fore-sight of 64-pr. 64 cwt. and 80-pr., and 6·6-in. R.M.L. guns.
Wrenches, sight, R.M.L., muzzle, hog-back.	1 per 10 guns, or less per work.	For muzzle-sight, 64-pr. 58 cwt. gun.
Wrenches, sight, S.B.	1 per 10 guns, or less per work.	For fixing or removing the sight; available also for S.B.
Vocabulary Section V. (2).		
Bags, burster, R.M.L., common, 6·6-in.	1 per empty common shell.	
Bags, burster, R.M.L., common, 80-pr.	1 per empty common shell.	
Bags, burster, R.M.L., common, 64-pr.	1 per empty common shell.	
Bags, burster, R.M.L., common, 40-pr.	1 per empty common shell.	
Bags, primer, filled, 7 drams ...	3 per empty common shell.	
Boxes, tube, garrison	1 per gun	For friction tubes.
Cartridges, R.M.L., filled, serge or silk cloth.* 6·6-inch, 12½ lb. P. ...	2 per round of ammunition.	
Cartridges, R.M.L., filled, serge or silk cloth.* 80-pr., 12 lb. P.	1 per round of ammunition.	
Cartridges, R.M.L., filled, serge or silk cloth.* 61-pr., 10 lb. R.L.G.[4] ...	1 per round of ammunition.	Full, Mark III. gun only.
Cartridges, R.M.L., filled, serge or silk cloth.* 61-pr., 8¼ lb. ...	1 per round of ammunition.	Full, 71 and 58 cwt., and reduced, Mark III. guns.
Cartridges, R.M.L., filled, serge or silk cloth.* 61-pr., 6½ lb. ...	1 per round of ammunition.	Full, Mark I. and II. guns, and reduced, 71 and 58 cwt. guns.
Cartridges, R.M.L., filled, serge or silk cloth.* 61-pr., 8 lb. R.L.G.[2] ...	1 per round of ammunition.	Mark III. gun.
Cartridges, R.M.L., filled, serge or silk cloth.* 61-pr., 6 lb.	1 per round of ammunition.	64-pr. guns, except Mark III.
Cartridges, R.M.L., filled, serge or silk cloth.* 40-pr., 7 lb.	1 per round of ammunition.	
Cartridges, R.M.L., filled, serge or silk cloth.* 40-pr., 6½ lb. R.L.G.[4] ...	1 per round of ammunition.	
Fuzes, percussion, direct action, No. 3	1 per common shell ...	Except 40-pr.
Fuzes, percussion, R.L., No 7... ...	1 ,, ,, ,, ...	For 40-pr. gun.
Fuzes, time, 15 seconds, M.L., No. 41 ...	1 ,, Shrapnel shell ...	80-pr. studded, and 64-pr.
Fuzes, time, 15 seconds, with detonator, No. 43.	1 ,, ,, ,, ...	6·6-in., 80-pr. studless, and 40-pr.
Gas checks, R.M.L. 6·6-inch	1 per shell and Palliser shot.	For fixing to the base of the projectile.
Gas checks, R.M.L. 80-pr. ...	1 per studless shell ...	For fixing to the base of the projectile.
Gas checks, R.M.L. 40-pr. ...	1 per shell	For fixing to the base of the projectile.

* All the cartridges in Royal Artillery charge will be kept filled as far as store accommodation will admit. *See* para. 71.

† In cylinders of 5 each. The designation number is shown on the label of the cylinder or other package in which the fuze is packed. The number stamped on the fuze itself denotes the number of the thousand manufactured.

Digitized by Google

Equipment or R.M.L. 6·6-in., 80-pr. (Converted), 64-pr. (Wrought-iron or Converted), and 40-pr. Guns—Armament of Works—*continued.*

TABLE 5—*continued.*	Proportions.	Remarks.
Gauges, shell, ring, R.M.L. — body and gas checks: 6·6-inch; 80-pr. ...	1 per District.	
Gauges, shell, ring, R.M.L. — body and studs: 80-pr. ...; 64-pr. ...; 40-pr. ...	1 per District.	
Gunpowder — pistol, rifle pistol, F.G., R.F.G., *or* R.F.G.².	Sufficient to fill shells, supplied empty. *See* footnote §, page 753.	For primer bags of common shells, bursting charges of Shrapnel shells, and powder horns.
Gunpowder — Shell P and F.G. (6·6-inch), and Shell L.G. (80-pr. and 64-pr.)	Sufficient to fill shells, supplied empty. *See* footnote §, page 753.	For bursting charges of common shells.
Implements, fuze and shell — Bits, hookborer ...	6 per gun	
Cylinders, common	1 ,,	
Extractors, fuze, small, rifled.	1 ,,	
Handles, hookborer	1 ,,	
Hooks, hookborer ...	1 ,,	
Keys, fuze and plug, universal.*	1 ,,	2 per gun required when the Mark III direct action fuzes are used.
Spanners, gas check plug, 40-pr. ...	1 per 40-pr.	
Match — quick ... ... lb.	½-lb. per work in tin cylinders.	For general purposes.
Match — slow ... ... lb.	1 per 100 rounds	For lighting portfires, &c.
Plugs, fuze-hole, G.S.	1 per shell.	
Portfires, common	2 per 100 rounds	For general use.
Primers, Shrapnel shell ...	1 per empty Shrapnel shell	In cylinders of 10 each.
Shells, R.M.L., filled† — common 6·6-in. ...	78 per cent.	
common 80-pr. ...	60 ,,	
common 64-pr. ...	60 ,,	
common 40-pr. ...	60 ,,	
Shrapnel 6·6-in. ...	10 ,,	
Shrapnel 80-pr. ...	30 ,,	
Shrapnel 64-pr. ...	30 ,,	
Shrapnel 40-pr. ...	36 ,,	
Tubes, friction, copper, solid drawn	1 per round.	Issued in cylinders containing 25 each.

* Keys, fuze, and plug G.S. now on charge will continue to be used until worn out.

† Supplied with fuze-hole plugs, which, however, are separately shown, and are to be separately charged and accounted for.

N.B.—Spare ordnance, carriages, and slides; component and spare parts of the same; and also spare stores, will be allowed specially.

Screws, preserving, are placed in all fixing screw and other holes in the guns when the fittings are removed for storage or transport.

Digitized by Google

EQUIPMENT OF R.B.L. 7-INCH, 40-PR., AND 20-PR. GUNS.

Armament of Works.

TABLE 6.	Proportions.	Remarks.
Vocabulary Section II. (2).		
Drugs, gun, 5 tons	1 per district	Suitable for all ordnance up to 5 tons. *See* note *, page 742.
Limbers, sling wagon, 6 tons ... **Wagons,** sling, 6 tons	1 per district, if necessary	Available for all light ordnance. *See* note *, page 742.
Vocabulary Section III.		
Chests, tool, empty (with tools shown at page 706) facing R.B.L. guns 7-inch ... 40-pr. ... 20-pr. ... special, repairing R.B.L. guns, land service	As authorised, *vide* paragraph 174	For repairing the guns, *see* lists, pages 706 and 713.
Chests, tool, filled No. 11A ... ... ,, 4c	1 per work. As authorised, *vide* para. 174.	
Bits, vent, Armstrong...	1 to 4 guns with vent pieces per work	Removes irregularities in the vent.
Cans, oil, lubricating, smiths ...	1 per 2 guns or under, but not exceeding 5 per work	Globular can, with fine spout.
Files, second cut, safe edge, 12-inch	1 per 2 7-inch guns per work.	For filing nose of vent piece.
Forges, field, R.A., Mark IV... ...	As authorised. *See* paragraph 174.	
Hammers. claw, 28-oz.	2 per battery for all ordnance	
Punches. R.B.L. guns, steel 13-inch ... 6 ,, ...	1 per 7-inch and 40-pr. gun 1 per 20-pr. ,, ...	For removing keep-pins, &c.
Spanners, McMahon, 15-inch ...	1 per battery for guns on standing and sliding carriages, 2 per battery for guns on travelling siege carriages	For tightening nuts, &c.
TOOLS, ORDNANCE.		
Tools examining, painting, and lacquering ordnance ... ... sets	1 per district ...	According to the nature of ordnance in the district. For detail of tools, *see* pages 616 to 619.
Vocabulary Section IV.		
Brushes, water, carriage	2 per gun...	1 for cleaning the sponge, and 1 for cleaning the projectiles.
Candles, magazine*	1 lb. per fighting lantern	
Chalk, white ... ... lbs.	2 per gun...	Annual supply.
Oil, mineral ... ... gallons	Sufficient to fill the hydraulic buffer	

* Supplied by Army Service Corps.

Digitized by Google

Equipment of R.B.L. 7-in., 40-pr., and 20-pr. Guns—Armament of Works—*continued.*

TABLE 6—*continued.*	Proportions.	Remarks.
Miscellaneous Stores.		
Handbooks for ordnance... ...	... ...	*See* paragraph 191.
Handbooks for range-finder ...	... ...	
Vocabulary Section V. (1).		
Axletrees, transporting: Slides, L., iron, R.M.L. 7-inch (for medium slides, L., Nos. 1, 2, and 3) slide, L., medium, wood	1 for each nature as required for each district or group of sub-districts (such as Isle of Wight or Portland), where wanted, and roads are suitable	A further supply will be allowed, when necessary, on special representation. These articles with their limbers and wheels are also available for 80 or 64-pr. and S.B.
Bearers, shot, R.B.L. 7-inch ...	2 per 7-inch gun... ...	For carrying projectiles.
Boards, range, fuze scale	1 per 2 guns of same nature, or 1 per gun where mounted singly	To be prepared locally.*
Boxes, grease, 3 lbs.	1 to 3 guns	Suitable for all rifled guns.
Brushes, piasaba, R.B.L. 7-inch ... 40-pr. ... 20-pr. ...	1 per practice battery for each nature from which practice is carried on	For cleaning out the grooves.
Buckets, sponge, garrison	1 per 2 guns; for guns on Moncrieff carriages, 1 per gun	To hold water for damping the sponge.
Caps, sponge† No. 5	20-pr. 1 per sponge where necessary	To protect sponge head.
,, 7	40 ,,	
,, 9	7-inch	
Carriages field, R.B.L. 20-pr.	1 per gun.	
garrison R.B.L. 7-inch Moncrieff ... 40-pr., common (wood, converted non-recoil, or No. 2) sliding medium (Nos. 1, 2, 3, 4, 5, 15, 16, 17, 18, 19, or 20)	1 per gun according to description of mounting approved	
siege, R.B.L. 40-pr., 6-ft. parapet		
Cases, cartridge No. 2	7-inch 2 per gun	To bring filled cartridges to gun in action.
,, 5	40 pr. or 20-pr.	
Clamps, tangent sight A	2 per 40-pr. gun	
C	2 per 7-inch 82 cwt. gun	
Clinometers, garrison	1 per work	For measuring angles and ascertaining quadrant elevation.
Coatings, sponge, R.B.L. 7-inch ... 40-pr. ... 20-pr. ...	1 per 100 rounds of ammunition	Spare, for sponge head.

* The fuze scale is either painted on the board, or printed on paper and attached to the board.

† Only to be used for sponges in transit, or where stores are damp, or when kept in the open.

Digitized by Google

Equipment of R.B.L. 7-in., 40-pr., and 20-pr. Guns—Armament of Works—*continued.*

TABLE 6—*continued.*	Proportions.	Remarks.
Compressors, land service, R.B.L. 7-inch*	As required	For 7-inch R.B.L. guns only.
Covers { R.B.L. 7-inch, Moncrieff { brake gear ... / elevating gear ...	1 per Moncrieff carriage	For protection of brake gear. / For protection of elevating gear
Covers { vent, R.B.L. { 7-inch ... ... / 40-pr. ... ... / 40-pr., sideclosing / 20-pr.	1 per gun	To protect vent slots and sights.
Covers, sights. R.B.L. reflecting ... { lower ... / upper ...	1 per carriage ... / 1 per carriage ...	For protecting sights 7-inch R.B.L., counterweight, carriage Mark II.
Cups, R.B.L. guns† { 7-inch ... ... / 20-pr. ... ... / 40-pr. ... ... / 40-pr., side closing ...	1 per round / ... ... / 1 per round	With practice ammunition only.
Extractors, tin cup { cross-head ... ... / hook	1 per 40-pr. side closing gun / 1 of either per gun ..	Only for practice guns in the case of 40-pr.
Flags, red, 12 feet × 6 feet	1 for each practice battery	*See* paragraph 100, and Appendix IV.
Gyns. triangle, with appurtenances, light	1 per sub-district, or 2 if more than 3 works (in exceptional positions, if more are considered necessary, they must be specially applied for)	Available for all ordnance of 7 tons and under. For complete set of stores, *see* note †, page 745.
Handspikes { common { 7 feet ... / 6 feet ...	2 per 7-inch gun... ... / { 2 per 40-pr. or 20-pr. ... / 5 per 40-pr.	On rear chock and sliding carriages. / On sliding carriage. / On wood and iron standing carriages and travelling siege carriages.
Handspikes { metal roller, 7 feet, L.S.	2 per No. 16 sliding carriage	To run the gun up or back.
Jacks, lifting, screw, Clerk's... ...	2 per work	For travelling siege carriages.
Lanterns, fighting	2 per casemate	For candles, *see* page 766.
Lanyards friction tube { field	3 per 20-pr. gun on field carriages.	
Lanyards friction tube { garrison { No. 2 ... / No. 3 ...	3 per gun on Moncrieff carriages. / 3 per gun on sliding carriages.	
Lanyards friction tube { siege, No. 1	3 per 40-pr. gun on siege carriages.	
Levers, iron-shod { crow, 7 feet	1 per work for all ordnance	To draw bolts out of slides, &c.
Levers, iron-shod { slide, 4 feet	2 per gun on sliding carriage	For traversing the slide.

* These will be kept in R.A. Store when not in use.

† For practice, cups are supplied at the rate of 1 per 10 rounds, *or less*, according to requirements for 7-inch, and 1 per 5 rounds for 40-pr., 40-pr. side closing, and 20-pr., and the unserviceable ones should be returned to store after practice.

Digitized by Google

Equipment of R.B.L. 7-in., 40-pr., and 20-pr. Guns—Armament of Works—*continued.*

TABLE 6—*continued.*

	Proportions.	Remarks.
Levers pointed No. 2	2 per gun on carriages with rear eccentrics	To run the gun up or back.
Levers pointed No. 4 ..	2 per 7-inch gun on Moncrieff carriages	To run the gun up or back.
Levers 8 feet	1 per work	For travelling siege carriages.
Limbers field, R.B.L. 20-pr. carriage	1 per carriage.	
Limbers siege, R.B.L. 40-pr., iron	1 for every 3 40-pr. guns or less	For travelling siege carriages.
Limbers transporting slide, L. iron / medium	1 for each nature as required for each district or group of sub-districts (such as Isle of Wight or Portland), where wanted, and roads are suitable	*See* Axletrees.
Linstocks	1 per battery for all ordnance	To hold lighted slow match.
Measures, hydraulic buffer, filling...	1 per work where required	For filling the hydraulic buffers.
Ordnance, R.B.L.* 7-inch 82 cwt., land service ...	As authorised ...	For fittings and special implements, *see* page 773; and for sights, page 770.
Ordnance, R.B.L.* 7-inch 72 cwt. ...		
Ordnance, R.B.L.* 40-pr. 35 cwt., land service ...		
Ordnance, R.B.L.* 40-pr. 32 cwt., land service ...		
Ordnance, R.B.L.* 40-pr., side closing ...		
Ordnance, R.B.L.* 20-pr., 16-cwt.		
Pedestals, carriage garrison, common, R.B.L. 40-pr. medium (Nos. 15, 16, 19, and 20)	1 per carriage, fitted with elevating screw	To replace elevating screw when removed.
Platforms, siege, Clerk's	1 per travelling siege carriage	
Pockets tin cup	1 per gun	Only for practice guns in the case of 40-prs. with vent pieces. For tin cups.
Pockets tube, land service ...	1 ,, ,, ...	For vent piece primers.

* R.B.L. guns are also supplied with the following fittings, which are not enumerated in these details:—

7-inch 82 cwt. guns have when mounted on "counterweight carriage, Mark II," 1 preserving screw; 1 plate, trunnion; 2 bolts, eye, trunnion; 2 screws, preserving, bolt, eye, trunnion; 1 plate, elevating, with bolt, washer, keep pin, and fixing and preserving screws; and when mounted on "carriage, garrison, sliding medium, No. 1, iron," 2 plates, elevating, with 2 pivots, 2 keep-pins, and 8 fixing and 8 preserving screws.

40-pr. side closing guns have also 2 clamps, tangent sight; brackets, guide, with fixing screws, 1 lower and 1 upper with stud stop and spiral spring; stud retaining breech block, with releasing lever and spiral spring; and screws, bracket guide, preserving.

20-pr. 16 cwt. guns have also 1 eye, elevating, with bolt, washer, and keep-pin.

N.B.—The fittings of a breech screw consist of 1 lever with 2 keep-pins, 1 indicator ring, and 1 tappet ring (except for 20-pr. which has no indicator ring). The preserving screws for friction tube-pin and crutch are in the 7-inch and 40-pr. vent pieces respectively, the lanyard guide preserving screw is in the metal of such guns as are fitted for naval as well as land service.

Digitized by Google

Equipment of R.B.L. 7-in., 40-pr., and 20-pr. Guns—Armament of Works—*continued.*

TABLE G—*continued.*	Proportions.	Remarks.
Prickers, vent, 12-inch	2 per 40-pr. side closing gun	To clear the vent.
Punches, vent, 8-inch...	1 per 40-pr. side closing gun	
Rammers, R.B.L. 7-inch ... ... / 40-pr., 5 feet... / 20-pr.	1 per gun.	
Ropes, drag, heavy ... ... pairs	2 per work for all ordnance, and 2 per limber for guns on travelling siege carriages	
Scotches, medium	As required	For scotching up the ends of piles of projectiles. *See* paragraph 633.
Screws lanyard guide, preserving	1 per 7-inch 82 cwt. and 40-pr. guns	
Screws pin, friction tube, preserving	1 per 7-inch 82 cwt. and 72 cwt. guns	
Shot, R.B.L., case 7-inch ... ... / 40-pr. ... ... / 20-pr.	10 per cent.	
Sights, R.B.L. fore F	2 per 7-inch 82 cwt., 40-pr. and 20-pr. guns	
Sights, R.B.L. fore 7-inch, 72-cwt. ...	2 per 7-inch 72 cwt. gun	
Sights, R.B.L. reflecting, counter-weight carriage, Mark II, 7-inch 82 cwt. lower	1 per 7-inch 82 cwt. gun when mounted on counterweight carriage Mark II	
Sights, R.B.L. reflecting, counter-weight carriage, Mark II, 7-inch 82 cwt. upper	1 per 7-inch 82 cwt. gun when mounted on counterweight carriage Mark II.	
Sights, R.B.L. tangent 7-inch 82 cwt.	2 per 7-inch 82 cwt. gun	
Sights, R.B.L. tangent 7-inch 72 cwt.	2 per 7-inch 72 cwt. gun	
Sights, R.B.L. tangent 40-pr.	2 per 40-pr. and 40-pr. side closing guns	
Sights, R.B.L. tangent 20-pr. 16 cwt. ...	2 per 20-pr.	
Slides, L. medium (Nos. 1, 2, 3, 4, 5, 11, 12, 13, 14, 15, 16, and 17)	According to description of works	Moncrieff slides are included with the carriages.
Slings, rope, 6-inch, 11 feet long ...	2 per work for guns on travelling siege carriages	For shifting guns.
Spanners, hydraulic buffer No. 2 or No. 4	1 per battery where required	To release piston rod.
Spanners, hydraulic buffer No. 6	2 per battery where required	To remove screw plug.
Spikes, gun, common	2 per gun...	For spiking vents, permanently.
Sponges, R.B.L. 7-inch ... ... / 40-pr. ... ... / 20-pr.	1 per gun	
Straps, tube box, long...	ordnance 1 per tube pocket 1 ,, tin cup pocket 1 ,, tube box	

Digitized by Google

Equipment of R.B.L. 7-in., 40-pr., and 20-pr. Guns—Armament of Works—*continued.*

TABLE 6—*continued.*	Proportions.	Remarks.
Tackles { gun, 3-inch white rope ...	2 per 2 or less 7-inch guns on Moncrieff carriages	For running the gun back, &c.
Tackles { luff, 14 fathoms	2 per work, for slides if not already provided for other guns therein, and 4 per work for guns on travelling siege carriages	To meet contingencies.
		For shifting the guns.
Tampeons, R.B.L. { 7-inch { breech... ... muzzle ...	1 per gun	To protect the bore.
Tampeons, R.B.L. { 40-pr. { breech... ... muzzle ...		
Tampeons, R.B.L. { 20-pr. { breech... ... muzzle ...		
Vent-servers*	2 per 40-pr. side closing gun	To place in the vent while loading.
Wheels, transporting { No. 85 / No. 86 }	1 pair for each nature as required for each district, or group of sub-districts (such as Isle of Wight or Portland), where wanted, and roads are suitable	No. 85 or No. 86, according to the nature of the axletree.
Wrenches { forked, platform, wood, medium	1 per sub-district ...	For altering the flanges, &c. Suitable for all wood slides, L.
Wrenches { knock up, general service	1 per work, 2 if over 10 slides, L.	For tightening nuts, &c. Available for all natures of slides, L.
Wrenches { pivot, No. 4	1 per work for 7-inch R.B.L. guns fitted with elevating arcs, or mounted on counter-weight carriage	For fixing or removing screws, pivots, &c.
Vocabulary Section V. (2).		
Bags { burster, R.B.L., common ...	1 per empty 7-inch and 40-pr. common shell	
Bags { primer, filled, 7 drams ...	3 per empty 7-inch and 40-pr. common shell	One or more of these primers to be placed on the top of the bursting charge before the fuze or plug is inserted.
Boxes, tube, garrison	1 per gun...	For friction tubes.
Bursters, R.B.L., segment, filled, 20-pr.	1 per 20-pr. empty segment shell	
Cartridges, R.B.L., filled, serge { 7-inch { 11-lb. / 10-lb.	1 per round of ammunition	All the cartridges in Royal Artillery charge will be kept filled, as far as store accommodation will admit. *See* paragraph 71.
Cartridges, R.B.L., filled, serge { 40-pr., 5 lb ...		
Cartridges, R.B.L., filled, serge { 20-pr., 2½-lb....		

* Whipcord should be demanded separately for making the lanyards.

Digitized by Google

Equipment of R.B.L. 7-in., 40-pr., and 20-pr. Guns—Armament of Works—*continued.*

TABLE 6—*continued.*	Proportions.	Remarks.
	Land Fronts (per 100 rounds). / Sea Fronts (per 100 rounds).	
Fuzes* percussion† B.L., plain, No. 2 ...	80 / 80	20-pr. only.
Fuzes* percussion† direct action	80 / 80	7-inch and 40-pr.
Fuzes* time Armstrong, E, No. 22	20 / 20	20-pr. only.
Fuzes* time 15 seconds, with detonator, No. 43 ...	20 / 20	7-inch and 40-pr.
Gauges, shell, ring, R.B.L. 7-inch / 40-pr. / 20-pr.	1 per battery for each calibre	For gauging the bases of the projectiles.
Gunpowder pistol, rifle pistol, F.G., R.F.G., or R F.G.[2] ... lb.	Sufficient to fill shells supplied empty. *See* footnote §, p. 753.	For Shrapnel shells.
Gunpowder shell, L.G. ... lb.	Sufficient to fill shells supplied empty. *See* footnote §, p. 753.	For common and segment shells.
Implements, fuze and shell Bits, hookborer ...	6 per gun	
Implements, fuze and shell Cylinders, common...	1 ,, ,,	
Implements, fuze and shell Handles, hookborer	1 ,, ,,	
Implements, fuze and shell Hooks, hookborer ...	1 ,, ,,	
Implements, fuze and shell Keys, fuze and plug, universal	1 ,, ,,	
Lubricators, service‡ 7-inch...	1 per round of ammunition	Issued separate with cartridges.
Lubricators, service‡ 40-pr....	1 per round of ammunition	Issued separate with cartridges.
Match quick ... ... lb.	½ per work	For general purposes.
Match slow ... ... lb.	1 per 100 rounds... ...	For lighting portfires, &c.
Plugs fuze-hole G.S.	1 per 7-inch and 40-pr. shell	
Plugs fuze-hole R.B.L. ...	1 per 20-pr. shell	
Plugs wood, covered with serge	1 per 20 pr. segment shell.	
Primers, vent piece	1 per round of ammunition, 7-inch and 40-prs. only	Supplied in cylinders containing 25.
Shells, R.B.L.§ common 7-inch ... ... / 40-pr. ... ... / 20-pr.	60 per cent.	
Shells, R.B.L.§ segment 7-inch ... ... / 40-pr. ... ... / 20-pr.	30 per cent.	
Tubes, friction, copper, solid drawn	1 per round	Issued in cylinders containing 25.
Wads fuze-hole, G.S.	1 per empty shell, 7-inch and 40-pr.	
Wads R.B.L. sockets	1 per empty common shell, 20-pr. only	

* In cylinders of 5 each, except time, Armstrong, E, No. 22, which is issued in cylinders of 1 each. The designation number is shown on the label of the cylinder or other package in which the fuze is packed. The number stamped on the fuze itself denotes the number of the thousand manufactured.

† The 7-inch and 40-pr. will be supplied with direct-action fuzes as the present equipment of G.S. and R.L. fuzes becomes used up.

‡ Until used up, the existing store of 40-pr. L.S. cartridges will be issued, in which, when filled, the lubricators are choked.

§ Supplied with fuze-hole plugs which, however, are separately shown, and are to be separately charged and accounted for.

Keys, fuze and plug G.S., on charge, will continue to be used until worn out.

Digitized by Google

Fittings and Special Implements for 7-inch, 40-pr., and 20-pr. R.B.L. Guns.

TABLE 6—*continued.*

	7-inch 82 cwt.	7-inch 72 cwt.	40-pr. 35 or 32 cwt.	20-pr. 16 cwt.	Remarks.
FITTINGS.					
Eyes, elevating	—	—	—	1	
Levers, breech screw (with 2 keep-pins)	1	1	1	1	
Pieces, vent	1	1	1	1	
Rings { indicator	1	1	1	—	
Rings { tappet	1	1	1	1	
Saddles (with fixing screws) ...	1	1	—	—	
Screws { breech	1	1	1	1	
Screws { crutch, preserving ...	—	—	2	—	
Screws { set, tangent sight ...	—	—	—	2	1 left and 1 right.
Sockets, sight tangent	—	2	—	—	
SPECIAL IMPLEMENTS.					
Levers, vent piece { lifting ...	1	1	—	—	For raising and lowering the vent piece in gun.
Levers, vent piece { releasing ...	1	1	—	—	Required if the vent piece jams.

N.B.—Spare ordnance, carriages, and slides, L; component and spare parts of the same and also spare stores, will be allowed specially.

Digitized by Google

EQUIPMENT OF R.M.L. HOWITZERS, 8-INCH, 70 AND 46-CWT., 6·6-INCH, AND 6·3-INCH.

Armament of Works.

TABLE 7.	Proportions.	Remarks.
Vocabulary Section II. (1).		
Colours, camp	2 per howitzer	For laying out the line of fire.
Vocabulary Section II. (2).		
Drugs, gun, 5 tons	1 per district	Suitable for all ordnance up to 5 tons.
Limbers, sling wagon, 6 tons ...	1 per district if necessary	Available also for 80-pr. and 64-pr. R.M.L., R.B.L., and S.B. ordnance.
Wagons, sling, 6 tons...		
Vocabulary Section III.		
Chests, tool, empty, venting, siege train (with tools shown in Appendix X.)	... ...	For R.M.L. and S.B. ordnance. *See* pages 700 to 705.
Chests, tool, filled { No. 3 D ... ... ; 3 E ... ... ; 11 A ...	... ... ; 1 per district ... ... ;	*See* page 707. ; *See* page 715. ; *See* page 129.
Cans, oil, lubricating, smiths ...	1 per 6 howitzers or less, fitted with hydraulic buffers	Globular can, with fine spout.
Forges, field, R.A., Mark IV, special	As authorised. *See* paragraph 174.	
Hammers, claw, 28-oz.	2 per battery for all ordnance	For general use.
Spanners, McMahon, 15-inch ...	1 per battery for all ordnance	For tightening nuts, &c.
TOOLS, ORDNANCE.		
Tools, examining, painting and lacquering rifled Ordnance ... sets	1 per district	For detail of tools, *see* pages 616 to 619.
Vocabulary Section IV.		
Brushes, water, carriage	2 per howitzer	1 for cleaning the sponge, and 1 for projectiles in emplacement.
Chalk, white ... ... lb.	2 per howitzer	Annual supply.
Oil, mineral ... ... gallons	Sufficient to fill the hydraulic buffer	Directions for filling are on a brass plate attached to the buffer.
Miscellaneous Stores.		
Handbooks { for ordnance ... ; for range-finder }	*See* paragraph 191.	

Digitized by Google

Equipment of R.M.L. Howitzers, 8-in., 70 and 46-Cwt., 6·6-in., and 6·3-in.—Armament of Works—*continued.*

TABLE 7—*continued.*	Proportions.	Remarks.
Vocabulary Section V. (1).		
Axletrees, transporting, bed, howitzer, R.M.L.	1 per work, with howitzer beds	*See* Limbers and Wheels.
Bags, extractor, projectile, 9-inch ...	1 per extractor	To cover the head.
Bearers, shot, R.M.L. 8-inch howitzer ...	1 per 8-inch howitzer ...	For carrying projectiles.
6·6-inch ,, ...	1 per 6·6-inch howitzer...	
Beds, howitzer, R.M.L.* 8-inch ...	1 per 8-inch 46-cwt. howitzer	Where howitzers are not mounted on carriages.
6·6-inch ...	1 per 6·6-inch howitzer...	
6·3-inch ...	1 per 6·3-inch ,, ...	
Boards, range, fuze, scale	1 per two guns of same nature, or 1 per gun where mounted singly	To be prepared locally.†
Brushes, piasaba, R.M.L. 8-inch 70-cwt. howitzer	1 per battery for each nature from which practice is carried on	For cleaning out the grooves.
8-inch 46-cwt. ,,		
6·6-inch		
6·3-inch howitzer ...		
Buckets, sponge, garrison	1 per howitzer	To hold water for damping the sponge.
Caps, sponge‡ No. 8	6·3-inch 1 per sponge, 6·6-inch where necessary 8-inch	To protect sponge head.
,, 9		
,, 10		
Carriages, siege, R.M.L. 8-inch 70-cwt. howitzer	1 per howitzer.	Where howitzers are not mounted on beds.
8-inch 46-cwt. howitzer		
6·6-inch howitzer ...		
6·3-inch ,, ...		
Cases, cartridge No. 2	8-inch ... 2 per howitzer	To bring up filled cartridges.
,, 4	6·6-inch and 6·3-inch...	
Clamps, tangent sight B	2 per 8-inch 70-cwt. and 6·6-inch howitzers, 2 per 8-inch 46-cwt., and 1 per 6·3-inch howitzers	
E	1 per 8-inch 46-cwt. and 6·3-inch howitzers when centre-sighted.	
Clinometers, garrison	1 per howitzer	For measuring angles and ascertaining quadrant elevation.
Clippers, portfire	1 per battery for all ordnance	To cut lighted portfires.
Extractors, projectile, R.M.L. 8-inch gun	... ...	For the 8-inch 70-cwt. howitzer.
8-inch 46-cwt. howitzer	1 per battery for each nature of howitzer	
6·6-inch howitzer ...		
6·3-inch ,, ...		
Gyns, triangle, with appurtenances, light	1 per sub-district, or 2 if more than 3 works (in exceptional positions); if more are considered necessary, they must be specially applied for	Available for all ordnance of 7 tons and under.

* These can be transported by means of the axletree, limber and wheels.

† The fuze scale is either painted on the board, or printed on paper and attached to the board.

‡ Only to be used for guns in transit or where stores are damp, or when kept in the open.

Digitized by Google

Equipment of R.M.L. Howitzers, 8-in., 70 and 46-cwt., 6·6-in., and 6·3-in.—Armament of Works—*continued.*

TABLE 7—*continued.*	Proportions.	Remarks.
Handspikes, common, 6 feet ...	5 per carriage. 2 per bed.	
Horns, powder*	1 per battery for all ordnance	For priming guns if required.
Jacks, lifting, screw, Clerk's ...	2 per work	For general use.
Lanyards, friction tube, siege, No. 1	3 per howitzer.	
Levers, iron-shod, crow, 7 feet ...	1 per work for all ordnance	For drawing bolts, &c.
Limbers: siege, R.M.L. howitzer L.S. armaments — 8-inch (70-cwt., 46-cwt.), 6·6-inch ... ..., 6·3-inch	1 per howitzer.	
Limbers: transporting, bed, howitzer, R.M.L.	1 per work with howitzer beds	*See* Axletrees.
Linstocks	1 per battery for all ordnance	To hold lighted slow match.
Measures, hydraulic buffer, filling...	1 per work where required	For filling the hydraulic buffer.
Ordnance, R.M.L.: 8-inch howitzer (70-cwt., 46-cwt.), 6·6-inch howitzer ..., 6·3-inch ,, ...	As authorised.	
Ordnance, R.M.L.: FITTINGS. Plates, elevating: 8-inch howitzer (70-cwt., right; 46-cwt., right), 6·6-inch howitzer, 6·3-inch ,,	1 per howitzer.	
Ordnance, R.M.L.: Screws, plate, elevating, preserving: 9-inch ...	3 per 8-inch 46-cwt. and 4 per 6·3-inch.	
Ordnance, R.M.L.: Screws, plate, elevating, preserving: 8-inch 70-cwt. howitzer	4 per 8-inch 70-cwt. or 6·6-inch.	
Plates, pivot, double-decked platform.	1 per platform	With under plate and bolts.
Platforms: siege, double-decked.	1 per howitzer, with hydraulic buffer	
Platforms: "C" pivot† (*a*)	1 per howitzer bed.	
Platforms: ground, R.M.L. howitzer bed (*a*)		
Plugs: pivot, No. 17...	1 per platform.	
Plugs: vent	1 per howitzer	To protect the vent at home stations and in cold climates.‡
Plummets, howitzer	1 per howitzer	For laying.

* Contains 1½ lb. of gunpowder.

† **Guides**, wheel, central pivot, howitzer 1
Plates trail 1
wheel, platform siege 2
Plugs, pivot, No. 13 1
(Specially allowed for Hong Kong.)

‡ At Halifax the vents will be secured by tow steeped in Field's grease and capped with putty.

(*a*) To be kept in Ordnance Store charge and demanded and laid by Royal Engineers as required. Should accommodation exist in the works in which they would have to be laid, arrangements should be made to have them stored there, and taken charge of for the Ordnance Store Department by the Master Gunner.

Digitized by Google

Equipment of R.M.I. Howitzers, 8-in., 70 and 46-cwt., 6·6-in., and 6·3-inch—Armament of Works—*continued.*

TABLE 7—*continued.*

	Proportions.	Remarks.
Prickers, vent, 12-inch	1 per howitzer	To clear the vent.
Punches, vent { 12-inch	1 per 8-inch 46-cwt. howitzer.	
8-inch	1 per howitzer, except 8-in. 46-cwt.	
Rammers, R.M.L. { 8-inch howitzer { 70-cwt. ... / 46-cwt. ...	1 per howitzer.*	
6·6-inch howttzer ...		
Ropes, drag, heavy ... ... pairs	2 per work for all ordnance.	
Shot, R.M.L., case, 80-pr. (for 6·3-in.)	10 per 100 rounds.	
Sights, R.M.L. { crossbar, fore { 8-inch { 70-cwt. howitzer	2 per 8-inch 70-cwt. howitzer.	
46-cwt. howitzer	2 per 8-inch 46-cwt. howitzer.	
6·6-inch howitzer	2 per 6·6-inch howitzer.	
6·3-inch ,,	2 per 6·3-inch ,,	
crossbar, tangent { 8-inch { 70-cwt. howitzer	2 per 8-inch 70-cwt. howitzer.	
46-cwt. howitzer	2 per 8-inch 46-cwt. howitzer.	
6·6-inch howitzer	2 per 6·6-inch howitzer.	
6·3-inch ,,	2 per 6·3-inch ,,	
Spanners, hydraulic buffer { No. 1 ...	1 per battery where required.	To tighten glands and caps of buffers.
No. 6 ...	2 per battery where required.	To remove screw plug.
Spikes, gun { common	2 per howitzer	For spiking vents permanently.
spring, C *or* D†	1 per howitzer where required.	For spiking vents temporarily.
Sponges, R.M.L. { 8-inch { 70-cwt. howitzer / 46-cwt. ,,	1 per howitzer.	
6·6-inch howitzer		
6·3-inch howitzer		
Sticks, portfire	2 per battery for all ordnance	To hold lighted portfires.
Straps, tube box, long...	1 per tube box.	
Tackles, luff, 14 fathoms	2 per two 8-in. howitzers, 2 per work for 6·6-inch and 6·3-inch howitzers.	
Tampeons, R.M.L. { 8-inch { 70 cwt. howitzer / 46-cwt. ,,	1 per howitzer.	To protect the bore.
6·6-inch		
6·3-inch howitzer ...		
Vent-servers‡	2 per howitzer	To place in the vent while loading; also for plugging the vents of guns mounted in warm climates, the lanyard being removed for this purpose.

* Rammers for 6·3-inch howitzers are on the sponge staves, and are fitted for worms.
† Only to be demanded for howitzers in advanced or exposed works.
‡ Whipcord should be demanded separately for making the lanyards.

N.B.—Spare ordnance, carriages, and platforms; component and spare parts of the same, and also spare stores, will be allowed specially.

(E.Q. R.)

Digitized by Google

Equipment of R.M.L. Howitzers, 8-in., 70 and 46-cwt., 6·6-in., and 6·3-inch—Armament of Works—*continued.*

TABLE 7—*continued.*

		Proportions.	Remarks.
Wadhooks, R.M.L., 8-inch	70-cwt.	1 per three 8-inch howitzers, 70 cwt. per work*	For drawing the charge and searching the bore.
	46-cwt.	1 per three howitzers 8-inch 46-cwt. 6·6-inch or 6·3-inch per work	
Wagons, platform		1 per district	Suitable for stores and 8-inch howitzer.
Wheels, 1st class B, No. 6		2 per work with howitzer beds	For transporting R.M.L., howitzer beds. (*See* axletrees.)
Wrenches	forked, platform, wood, siege, ground	1 per work with howitzer beds	For use with the siege platforms.
	pivot, No. 4	1 per battery.	
	sight, S.B.	1 per 10 or less 8-inch 46 cwt., or 6·3 inch howitzers when centre-sighted per work	For fixing or removing the muzzle sights.
Vocabulary Section V. (2).			
Bags, bursters, R.M.L, common ...		1 per empty common shell	
Boxes, tube, garrison		1 per howitzer	For copper friction tubes.
Cartridges, R.M.L., filled — serge *or* silk cloth, 6·3-inch	4 lb. R.L.G.[2] ...	... ...	All cartridges in Royal Artillery charge will be kept filled as far as store accommodation will admit. *See* paragraph 71. An equal number of each charge per howitzer will be maintained.
	2 ,, ,, ...	... ...	
silk cloth, 8-inch	11½ lb. R.L.G.[2]	(70 cwt.)	1 per round of ammunition
	10 ,, ,,	(46 ,,)	
	7 ,, ,,	(70 ,,)	
	5 ,, ,,	(46 ,,)	
	3½ ,, ,,	(70 ,,)	
	2½ ,, ,,	(46 ,,)	
silk cloth, 6·6-inch	5 ,, ,,	... ...	
	3 ,, ,,	... ...	
	2 ,, ,,	... ...	
Fuzes† — percussion	direct-action, No. 3...	1 per common shell.	For high angle fire.
	delay action	50 per cent. of common shell	
time	sensitive‡ long ...	50 per cent. of each for Shrapnel shell.	
	sensitive‡ middle		
	15 seconds, M.L. special, priming, No. 2	1 per star shell.	
Gaschecks, R.M.L.	8-inch howitzer 70 cwt. ...	1 per shell	For fixing to the base of the projectile.
	8-inch howitzer 46 ,, ...		
	6·6-inch		
	6·3-inch		
Gauges, shell ring, R.M.L. — body and gaschecks	8-inch howitzer, 70-cwt.	1 per district for each calibre	
	6·6-inch ...		
	6·3-inch ...		
body and studs, 8-inch howitzer, 46 cwt.			
low over studs, 8 inch			

* If additional wadhooks are required for drill they must be collected from other howitzers.

† The designation number is shown on the label of the cylinder or other package in which the fuze is packed. The number stamped on the fuze itself denotes the number of the thousand manufactured.

‡ The 15 seconds with detonators, at present on charge with each peace, will be retained and used up.

Digitized by Google

Equipment of R.M.L. Howitzers, 8-in., 70 and 46-cwt., 6·6-in., and 6·3-inch—Armament of Works—*continued.*

TABLE 7—*continued.*

		Proportions.	Remarks.
Gunpowder	R.L.G. *or* R.L.G.[2] lbs.	As required ...	Bursters, Shrapnel shells, and powder horns.
	R.F.G. *or* R.F.G.[2] ,,		
	shell (P., L.G., *or* F.G.) ,,		Bursters, common shells.
Implements, fuze and shell	Bits, hook-borer ...	6 per howitzer.	
	Cylinders, common...	1 ,, ,,	
	Handles, hook-borer	1 ,, ,,	
	Hooks, hook-borer...	1 ,, ,,	
	Keys, fuze and plug, G.S.*	2 ,, ,, ...	The second key required when Mark III Direct Action fuzes are used.
Match	quick ... ... lb.	½ per work	For general use.
	slow ... ... ,,	1 per 100 rounds... ...	For lighting portfires, &c.
Plugs, fuze-hole, G.S.		1 per shell.	
Portfires, common		2 per 100 rounds... ...	For general use.
Primers, Shrapnel shell		1 per empty Shrapnel shell	In cylinders of 10 each.
Shells, R.M.L., filled†	common: 8-inch howitzer 70-cwt.	60	Per 100 rounds.‡
	common: 8-inch howitzer 46-cwt	60	
	common: 6·6-inch	60	
	common: 6·3-inch howitzer	80	
	Shrapnel: 8-inch	30	
	Shrapnel: 6·6-inch	30	
	star ...: 8-inch	10	
	star ...: 6·6-inch	10	
	star ...: 6·3-inch	10	
Tubes, friction, copper, solid drawn		1 per round	Issued in cylinders containing 25 each.
Wads, fuze-hole, G.S.		1 per empty common shell.	

* Will be replaced by the "Key, fuze, universal," as the present store becomes used u .

† Supplied with fuze-hole plugs, which, however, are separately shown, and are to be separately charged and accounted for.

‡ All shells in R.A. charge will be kept filled as far as store accommodation will admit.

Digitized by Google

EQUIPMENT OF S.B. CAST-IRON GUNS, HOWITZERS, AND CARRONADES (INCLUDING S.B. B.L. 32-PR. GUNS).

ARMAMENTS OF WORKS.

The following Table is intended to guide the equipments of these classes of ordnance, on the assumption that the M.L. guns command the approaches to works both by land and sea, while howitzers, carronades, and S.B. B.L. 32-pr. guns are, as a rule, confined to flanking defences.

TABLE 8.	Proportions.	Remarks.
Vocabulary Section II. (2).		
Drags, gun, 5 tons	1 per district	Suitable for all ordnance up to 5 tons. *See* note *, page 742.
Limbers, sling wagon, 6 tons ...	1 per district if necessary	Available for all light ordnance. *See* note *, page 742.
Wagons, sling, 6 tons		
Vocabulary Section III.		
Chests, tool, empty, venting, siege train. (With tools shown at page 700.)	*See* paragraph 174 ...	For M.L. ordnance (rifled and S.B.).
Hammers, claw, 28-oz.	2 per battery for all ordnance	
Spanners, McMahon, 15-inch ...	1 per battery for all ordnance	For tightening nuts.
TOOLS, ORDNANCE.		
Tools, cleaning, examining and painting ordnance	1 set per district ...	For detail of tools Table B, page 620.
Vocabulary Section IV.		
Candles, magazine*	1 lb. per fighting lantern	
Cans, oil, feeding, 1-pint	1 per 6 pieces	
Chalk, white ... ... lbs.	2 per piece	Annual supply.
Oil, mineral ... ... gallons	Sufficient to fill the hydraulic buffer.	

* Supplied by Army Service Corps.

Digitized by Google

Equipment of S.B. Cast-iron Guns, Howitzers, and Carronades (including S.B. B.L. 32-pr. Guns)—Armament of Works—*continued.*

TABLE 8—*continued.*

	Proportions.	Remarks.
Vocabulary Section V. (1).		
Aprons, vent, large	1 per howitzer	Protects vent and tangent scale in transport.
Axletrees, transporting, slide, L., medium, wood	1 for each district or group of sub-districts (such as Isle of Wight or Portland), where required, and roads are suitable	A further supply will be allowed, when necessary, on special representation. These articles, as well as their limbers and wheels, are available also for the 80- or 64-pr. M.L. and 7-inch or 40-pr. B.L. guns.
Bearers, shot, S.B. 8-inch	1 per 68-pr. gun	To lift solid shot in loading.
Boards, range	According to position.	These will be issued blank and prepared by the O.C. R.A., the necessary materials being supplied by O.S.D.
Buckets, sponge, garrison	1 per 2 pieces	To hold water for damping the sponge.
Caps, sponge, Nos. 5, 7, 8, 9, 10, and 12§	1 per sponge where necessary.	To protect sponge head.
Carriages, garrison — S.B. — 10-inch howitzer	1 per piece, according to description of mounting approved	Casemate, common, rear chock, dwarf, and sliding medium.
Carriages, garrison — S.B. — 68-pr.		
Carriages, garrison — S.B. — 8-inch gun and howitzer ..		
Carriages, garrison — S.B. — 32-pr. } gun and 24-pr. } carronade 18-pr. }		
Carriages, garrison — sliding — No. 6 (S.B. B.L. 32-pr.)		
Carriages, garrison — medium — Nos. 21 to 24		
Cartouches, leather	1 per 4 guns when employed for salutes	For supplying the guns with cartridges.
Cases, cartridge, Nos. 1 to 6	2 per piece	To bring filled cartridges to the piece in action.
Clinometers, garrison	As required	For measuring angles and ascertaining quadrant elevation.
Clippers, portfire	1 per battery for all ordnance	To cut lighted portfires.
Compressors, land service* — R.M.L. 64-pr. 71 cwt. (for S.B. 68-pr.)	As required	For 68-pr. and 8-inch 54-cwt. guns.
Compressors, land service* — S.B. 8-inch 54 cwt....		
Covers, breech, S.B.B.L. 32-pr. ...	1 per 32-pr. S.B.B.L. gun.	
Flags, red, 12 feet × 6 feet	1 for each practice battery	*See* paragraph 100, and Appendix IV.
Garlands, rectangular† — 8-inch (also 68-pr.) ...	According to circumstances	To hold (generally) a pile of 30 shot or shells.
Garlands, rectangular† — 42, 32, 24, and 18-pr. ...		

* These will be kept in Royal Artillery Store when not in use.

† Where it can be done, garlands should be made on the spot, of stone or rod iron, or, where practicable, beds should be made for the piles with spherical projectiles half sunk in the ground.

§ Only to be used for sponges in transit, or where stores are damp.

Digitized by Google

Equipment of S.B. Cast-iron Guns, Howitzers, and Carronades (including S.B. B.L. 32-pr. Guns)—Armament of Works—*continued.*

TABLE 8—*continued.*	Proportions.	Remarks.
Garlands, Pins	4 per garland	Unite sides of garland at corners.
Gyns, triangle, with appurtenances, light	1 per sub-district, or 2 if more than 3 works. (In exceptional positions, if more are considered necessary they must be specially applied for)	Available for all ordnance of 7 tons and under. For complete set of stores, *see* note †, page 745.
Handspikes { common, 7 feet or 6 feet	{ 5 with a common carriage 2 with a sliding rear chock or carronade carriage	7 feet handspikes are used with guns over 80 cwt., and all guns on rear chock carriages.
metal roller, 7 feet, L.S.	2 with a sliding carriage	For running up the gun.
wood roller, 6 feet ...	1 with a rear chock carriage	
Horns, powder*	1 per battery for all ordnance	For priming guns, if required.
Lanyards, friction tube, garrison, No. 3.	2 per piece	
Lanterns, fighting	2 per casemate in which ordnance are mounted for flank defence	
Levers, iron shod { crow, 7 feet	1 per work for all ordnance	To draw bolts out of slides, &c.
slide, 4 feet	2 per slide	For traversing the slide.
Limbers, transporting, slide, L., medium	1 for each district or group of sub-districts (such as Isle of Wight or Portland) where required, and roads are suitable	*See* Axletrees.
Linstocks	1 per battery for all ordnance	To hold lighted slow-match.
Measures, hydraulic buffer, filling...	1 per work, where required	For filling the hydraulic buffers.
Ordnance, S.B. B.L. 32-pr.	As authorised	For fittings and special implements *see* page 787, and for sights, page 783.
Ordnance, S.B.† { carronades, 32-, 24-, 18-, and 12-pr.	As authorised	
guns { 8-inch		
68-, 42-, 32-, 24-, and 18-pr.		
howitzers, 10-, 8-, and 5½-inch		

* Contains 1½ lbs. of gunpowder, included inproportions at page 785.

† With the following Fittings and Sights, which are, however, separately shown, and are to be separately charged and accounted for:—With (*guns*): Sights, 1 fore and 1 hind, each with 2 fixing screws and lead packing, and 1 Scale, tangent, wood; (*howitzers*): Sights, 1 fore and 1 hind, and 1 set screw; (*carronades*): Sights, 1 hind, with 2 fixing screws and lead packing, and 2 preserving screws, and 1 fore.

Digitized by Google

Equipment of S.B. Cast-iron Guns, Howitzers, and Carronades (including S.B. B.L. 32-pr. Guns)—Armament of Works—*continued.*

TABLE 8—*continued.*			Proportions.	Remarks.
Pedestals, carriage	garrison	common, R.M.L. 64-pr. 58 cwt.	1 per wood carriage and 1 per carriage medium No. 6	For S.B. 8-inch, 32-, 24-, and 18-pr., and rear chock, 10- and 8-inch howitzer.
		sliding, dwarf, S.B. 18-pr.		
	medium	No. 6 ...		S.B. B.L. 32-pr., and S.B. 8-inch and 32-pr.
		„ 15 ...		For S.B. 68-pr. 95 cwt.
		„ 20 ...		For S.B. 8-inch casemate.
		„ 22 ...		S.B. 68-pr. 95 cwt.
		„ 23 ...		S.B. 8-inch 65 cwt. or 60 cwt., 32-pr. 58 cwt. or 56 cwt., sliding 32-pr. 63 cwt., 24-pr. and rear chock 8-inch.
Plugs, vent			1 per piece	To protect the vent at Home Stations, and in cold climates.*
Prickers, vent, 12-inch			1 per piece	To clear the vent.
Rammers	S.B. B.L. 32-pr. ...		1 per gun ...	Rammers for howitzers and carronades are on the sponge staves.
	S.B. 8-inch and 68-pr. to 18-pr.			
Ropes, drag, heavy ... ... pairs			2 per work for all ordnance	
Scales, tangent, wood, S.B. gun, 8-inch, 68-, 42-, 32-, 24-, and 18-pr.			1 per gun	
Shot (*see* page 786)				
Sights†	S.B. B.L. 32-pr.		1 per gun.	
	S.B., Fore and Hind	carronade, 32-, 24-, 18-, and 12-pr.	1 fore and 1 hind per carronade	
		gun, 8-inch, 68-, 42-, 32-, 24-, and 18-pr.	1 fore and 1 hind per gun	
		howitzer, 10-, 8-, and 5½-inch	1 fore and 1 hind per howitzer	
Slides, L, medium	No. 6 (S.B. B.L. 32-pr.)		1 per medium carriage, No. 6	Sliding carriages.
	No. 14		1 per casemate carriage	
	„ 17		1 per dwarf carriage ..	
Spanners, hydraulic buffer	No. 4		1 per battery where required	To release piston-rod.
	„ 6		2 per battery where required	To remove screw plug.

* At Halifax the vents will be secured by tow steeped in Field's grease and capped with putty.

† Screws, preserving, will be placed in all fixing screw and other holes in the guns when the sights, &c., are removed for storage or transport.

Digitized by Google

Equipment of S.B. Cast-iron Guns, Howitzers, and Carronades (including S.B. B.L. 32-pr. Guns)—Armament of Works—*continued*

TABLE 8—*continued.*	Proportions.	Remarks.
Spikes, gun { common	2 per piece, except S.B.B.L. 32-pr.	To spike vents permanently.
Spikes, gun { spring { B	1 per piece when required,* except S.B. B.L. 32 pr.	To spike vents temporarily
Spikes, gun { spring { C		
Spikes, gun { spring { D		
Sponges { S.B. B.L. 32-pr.	1 per piece	
Sponges { S.B. { 10-inch howitzer ...		
Sponges { S.B. { 8 ,, gun and howitzer ...		
Sponges { S.B. { 68- to 18-pr. ...		
Sticks, portfire	2 per battery for all ordnance	To hold lighted portfires.
Straps, tube box, long	1 per tube box	
Tackles { gun, 2½-inch tarred rope†	2 per 2 or less slides {	For 68-pr. guns.
Tackles { luff, 14 fathoms		For lighter pieces.
Tampeons** { S.B. B.L. 32-pr. muzzle	1 per S.B. B.L. 32-pr. gun	To protect the bore.
Tampeons** { S.B.	1 per M.L. gun or howitzer	To protect the bore.
Vent-servers‡	1 per piece (except S.B. B.L. 32-pr.)	To place in vent while loading, also for plugging the vents of guns mounted in warm climates; the lanyard being removed for this purpose.
Wadhooks { carronade { 32-pr. (also 24-pr.)	1 to every 3 pieces in a work, according to calibre,§ except S.B. B.L. 32-pr.	For drawing charges, and searching the bore.
Wadhooks { carronade { 18-pr. (also 12-pr.)		
Wadhooks { 10-inch howitzer ...		
Wadhooks { 8 ,, ,, ...		
Wadhooks { 8 ,, gun (also 68-pr. and 32-pr. 58 or 56 cwt.)		
Wadhooks { 32-pr. 50 cwt. (also 24- and 18-pr.) ...		
Wads, grummet, S.B.	According to circumstances‖	To prevent the projectile rolling out when the gun is depressed.
Wheels, transporting, No. 86 ...	1 pair for each district or group of sub-districts (such as Isle of Wight or Portland), where required, and roads are suitable	*See* Axletrees.

* Spring spikes are to be demanded only for pieces in advanced or exposed works.

† For composition of a set, *see* page 749.

‡ Whipcord should be demanded separately for making the lanyards.

§ And 6 spare to each district in which salutes are fired, for use of the saluting guns. If additional wadhooks are required for drill, the service wadhooks must be collected.

‖ The proportion depends on locality, and is left to the discretion of Officers Commanding R.A. In positions where guns would generally be fired with a slight elevation, the proportions required would be small; where guns are likely to be depressed, a grummet wad would be required for each solid shot, or plugged shell used as hollow shot.

** A junk wad should be demanded for, and attached to each tampeon.

Digitized by Google

Equipment of S.B. Cast-iron Guns, Howitzers, and Carronades (including S.B. B.L. 32-pr. Guns)—Armament of Works—*continued.*

TABLE 8—*continued.*	Proportions.	Remarks.
Wrenches: forked, slide, wood, medium	1 per sub-district ...	For altering the flanges, &c., suitable also for all wood traversing slides.
Wrenches: knock-up, G.S. ...	1 per work, 2 if over 10 traversing slides	For tightening nuts, &c., available for all natures of traversing slides.
Wrenches: sight, S.B.	1 per 10 guns or howitzers per work.	For screws of sights, pin friction tube, and lanyard guides.
Vocabulary Section V. (2).		
Bottoms, shell: conical ... ... / cylindrical ... / hemispherical ...	1 per shell according to nature	Elm for temperate and teak for tropical climates. Issued strung on iron rods holding 20.
Boxes, tube, garrison	1 per piece	For copper friction tubes.
Cartridges: S.B. B.L., filled, silk cloth. 32-pr. ... / S.B., filled, serge (for ordnance as detailed on page 782)	1 per round of ammunition	All the cartridges in Royal Artillery charge will be kept filled as far as store accommodation will admit, *see* paras. 71 and 72.
Fuzes*: percussion, Pettman, land, No. 6	1 per 2 common shells ...	For common shells with "crossed" plugs.
Fuzes*: time: common, No. 32 ...	1 to 2 common shells ...	In cylinders of 5 each.
Fuzes*: time: diaphragm Shrapnel, No. 33	1 per diaphragm Shrapnel.	In cylinders of 5 each.
Gauges, shell, ring, S.B.: 10-in and 8-inch, 42-pr. to 12-pr.	1 high gauge per battery for each calibre	For gauging projectiles.
Gunpowder: pistol, rifle pistol, F.G., R.F.G., or R.F.G.[2] ... lbs. / shell (L.G.) ... ,,	Sufficient to fill shells supplied empty. *See* footnote §, page 753	For bursters, diaphragm Shrapnel shells, and powder horns. For bursters of common shells.
Implements, fuze and shell: Bits, hook-borer ...	6 per 2 pieces.	
Implements, fuze and shell: Cylinders, common...	1 per 2 pieces.	
Implements, fuze and shell: Handles, hook-borer	1 per 2 pieces.	
Implements, fuze and shell: Hooks, hook-borer ...	1 per 2 pieces.	
Implements, fuze and shell: Keys, fuze and plug, G.S.	1 per 2 pieces.	
Match: quick ... ... lbs.	½ per work, in tin cylinder	For general purposes.
Match: slow ... ... ,,	1 per 100 rounds... ...	For lighting portfires, &c.
Plugs: fuze-hole, common	1 per shell.	
Plugs: loading hole (spare): large ... / small ...	5 per cent. on supply of diaphragm Shrapnel shell	Diaphragm Shrapnel, 24-pr. and above. Diaphragm Shrapnel, 18-pr. and below.
Portfires, common	2 per 100 rounds ...	For general use.
Rivets, shell, common: large: above 18-pr... ... / small: 18-pr. and under ...	1 per bottom issued loose	For fixing wood bottoms to shells.

* The designation number is shown on the label of the cylinder or other package in which the fuze is packed. The number stamped on the fuze itself denotes the number of the thousand manufactured.

Digitized by Google

Equipment of S.B. Cast-iron Guns, Howitzers, and Carronades (including S.B. B.L. 32-pr. Guns)—Armament of Works—*continued.*

TABLE 8—*continued.*	Land Fronts.		Sea Fronts.			Flanks.		
	Guns, 8-inch.	Guns, 68-, 42-, 32-, 24-, and 18-pr.	Guns, 8-inch.	Guns, 68-pr.	Guns, 42-, 32-, 24-, and 18-pr.	8-inch Guns; 10-, 8-, 5½-inch Howitzers and all Carronades.	32-pr. S.B. B.L. Guns.	
Shells, S.B., empty* — common, loose ...	60	25	70	30	30	30	—	Per 100 rounds.
— diaphragm	25	15	15	10	10	—	—	
— Shrapnel								
Vocabulary Section V. (1).								
Shot, S.B. case and grape ...	15	10	15	10	15	70†	100‡	
— solid...	—	50	—	50	45	—	—	

* Supplied with fuze-hole plugs, which, however, are separately shown, and are to be separately charged and accounted for.
† No grape-shot for howitzers.
‡ Case shot only.

TABLE 8—*continued.*	Proportions.	Remarks.
Vocabulary Section V. (2)—*continued.*		
Tubes, friction, copper, solid drawn	1 per round	Issued in cylinders containing 25.
Wads — fuze-hole, common ...	1 per common shell ...	For fuze-holes of empty shells.
— loading hole, diaphragm — 24-pr.	1 per diaphragm Shrapnel	Diaphragm Shrapnel, 24-pr. and above.
— loading hole, diaphragm — 18 ,,	1 per diaphragm Shrapnel	Diaphragm Shrapnel, 18-pr. and below.

N.B.—Spare ordnance, carriages, and slides, component and spare parts of the same, and also spare stores, will be allowed specially.

Digitized by Google

Fittings and Special Implements for S.B. B.L. 32-pr. Guns.

Referred to at page 782.

	No.	Remarks.
FITTINGS.		
Carriers	2	
Cups, obturating { large	1	For use when obturating ring expands.
{ small	2	
Discs, cup, obturating	3	
Plates, hinge	1	
Screws, breech	1	
Studs, catch, retaining carrier	1	
SPECIAL IMPLEMENTS.		
Levers, releasing breech screw	1	
Wrenches { A	1	For breech mechanism.
{ B	1	

Digitized by Google

EQUIPMENT OF 13, 10, and 8-INCH CAST-IRON MORTARS.

TABLE 9.	Proportions.	Remarks.
Vocabulary Section II.		
Carts, trench	1 to 10 13-inch mortars when required	For transporting shells.
Drugs. gun, 5 tons	1 per district	Suitable for all ordnance up to 5 tons. *See* note *, page 742.
Vocabulary Section III.		
Hammers, claw, 28 oz.	2 per battery	For all ordnance.
Lines. carpenters	1 per mortar...	6 yards of cord, used in pointing the mortar.
Spanners, McMahon, 15-inch ...	1 per battery where naval mortars are mounted.	For tightening nuts of wood beds and platforms.
Vocabulary Section IV.		
Chalk, white ... ... lbs.	2 per mortar	For chalking the line. Annual supply.
Vocabulary Section V. (1).		
Beds, mortar: 13-inch: 100 cwt., Naval ...	1 per mortar ...	With 1 coin, 1 derrick, 1 traversing lever, and 1 pintail, with 2 indiarubber rings, metal nut, and 3 metal washers.
13-inch: 36 cwt.		
10-inch, 18 cwt.		With 2 capsquares and 1 coin.
8-inch, 9 cwt.		
Boards, range	According to positon ...	These will be issued blank, and prepared by O.C.R.A., the necessary materials being supplied by O.S.D.
Buckets, sponge, garrison ...	1 per 2 mortars	To hold water for damping the sponge.
Caps, mortar: 13-inch: Land Service ...	1 per mortar in use* ...	To protect the bore.
Caps, mortar: 13-inch: Naval		
Caps, mortar: 10-inch, Land Service ...		
Caps, mortar: 8-inch		
Caps, sponge§ No. 10	For 8-inch mortar	To protect sponge head.
Caps, sponge§ No. 12	For 13-inch and 10-inch mortars	1 per sponge where necessary.
Cases, cartridge No. 1	2 per 13-inch L.S. and 10-inch mortars	To bring filled cartridges to mortar in action.
Cases, cartridge No. 6	2 per 8-inch mortar	
Cases, cartridge No. 7	2 per 13-inch naval mortar	
Clinometers, Watkin†	1 per battery	To adjust the elevation when requisite.
Clippers, portfire	1 per battery for all ordnance	To cut lighted portfires.

* Mortars not in use for practice or drill do not require caps. They can be laid horizontal with the coins removed.

† Clinometers, Watkin, will replace quadrants.

§ Only to be used for sponges in transit or where stores are damp.

Digitized by Google

Equipment of 13, 10, and 8-inch. Cast-iron Mortars—*continued.*

TABLE 9—*continued.*

	Proportions.	Remarks.
Decks, mortar, 13-inch	1 per 13-inch naval mortar	With 20 pins, and 21 india-rubber rings.
Flags, red, 12 ft. × 6 ft.... ...	1 for each practice battery	*See* para. 100 and Appendix IV.
Garlands, rectangular	According to circumstances	To hold a pile of 30 shells. *See* note †, page 781.
,, Pins	4 per garland	Unite sides of garlands at corners.
Gyns, triangle, with appurtenances, light	1 per sub-district, or 2 if more than 3 works. (In exceptional positions, if more are considered necessary, they must be specially applied for.)	Available for all ordnance of 7 tons and under. For complete set of stores, *see* note †, page 745.
Handspikes, common { 7 feet	4 per 13-inch naval mortar	For serving the mortar.
{ 6 feet ...	4 per 10-inch or 13-inch L.S. mortar	
	2 per 8-inch mortar ...	
Hooks, shell { beam	1 per 13-inch mortar ...	For lifting the shells.
{ hand	2 per 10-inch mortar ...	
Horns, powder*	1 per battery for all ordnance	For priming if required.
Lanyards, friction tube, garrison, No. 3.	2 per mortar...	
Linstocks	1 per battery for all ordnance	To hold lighted slow match.
Ordnance, S.B., Mortars { 13-inch { 100 cwt. / 36 cwt.	As authorised.	
{ 10-inch, 18 cwt. ...		
{ 8-inch		
Perpendiculars	1 per battery	To find the highest point of mortar when platform is not level.
Platforms, mortar, octagonal deck	1 per 13-inch naval mortar	To support the deck.
Plugs, vent...	1 per mortar	To protect the vent at home stations and in cold climates.†
Plummets, mortar	1 per mortar	Used in pointing mortars.
Prickers, vent, 12-inch	1 per mortar	To clear the vent.
Rods, pointing mortars	1 set of 2 per mortar ...	Used in pointing mortars placed under cover.
Skins, sheep, for mortars‡ ...	1 piece per mortar... ...	To wipe the shell when loading.
Spikes, gun, common	2 per mortar	For spiking vents permanently.
Sponges, S.B., mortar { 13-inch... ...	1 per 13-inch or 10-inch mortar.	
{ 8-inch... ...	1 per 8-inch mortar.	
Sticks, portfire	2 per battery for all ordnance	To hold lighted portfires.
Straps, tube box, long	1 per tube box.	

* Holds 1½ lbs. of gunpowder, included in proportions at page 790.
† At Halifax the vents will be secured by tow steeped in Field's grease and capped with putty.
‡ Old blankets may be substituted when specially approved.

Digitized by Google

Equipment of 13, 10, and 8-inch Cast-iron Mortars—*continued.*

TABLE 9—*continued.*	Proportions.	Remarks.
Tackles, luff, 14 fathoms ...	2 per 13-inch naval mortar	For the traversing lever.
Vent-servers*	1 per mortar	To place in vent while loading; also for plugging the vents of mortars mounted in warm climates.
Wrenches, pintail, bed, mortar	1 per 13-inch naval mortar	To tighten pintail nut. An operation necessary after about every 10 rounds.
Vocabulary Section V. (2).		
Boxes, tube, garrison	1 per mortar	For friction tubes.
Cartridges, S.B., empty serge — 13-inch (20 lb.... 9 lb....), 10-inch, 4 lb., mortar ..., 8-inch, 2 lb. ...	1 per round of ammunition	All empty. *See* para. 73.
Fuzes, time, mortar, large, No. 35	1 per mortar shell	
Gauges, shell, ring, S.B. — 13-inch, 12·88-inch; 10 ,, 9·88-inch; 8 ,, 7·95-inch	1 per battery per calibre	For gauging the shells.
Gunpowder — L.G. ... ... lb.; pistol, rifle pistol, F.G., R.F.G. or R.F.G.2 lb.; shell (L.G.) ... lb.	Sufficient to fill cartridges and shells supplied empty	For cartridges. For powder horns. For bursting charges.
Implements, fuze and shell — Bits, mortar ...	6 per 2 mortars	
Braces, mortar...	1 ,, ,, ...	
Cylinders, mortar	1 per 2 mortars	
Extractors, fuze, large	1 per district	
Mallets, mortar	1 per 2 mortars	
Match — quick	½ lb. per work in tin cylinder	For general purposes.
slow	1 lb. per 100 rounds ...	For lighting portfires, &c.
Portfires, common	2 per 100 rounds	For general use.
Shells, S.B., empty, mortar — 13-inch ..., 10-inch ..., 8-inch ...	100 per mortar	These shells have no plugs, the fuze-holes are corked.
Tubes, friction, copper, solid drawn	1 per round	Issued in cylinders containing 25.

* Whipcord should be demanded separately for making the lanyards.

N.B.—Spare mortars, beds and platforms, component and spare parts of the same, and also spare stores, will be allowed specially.

Digitized by Google

EQUIPMENT OF 5½ AND 4⅖-INCH BRONZE MORTARS.

TABLE 10.	Proportions.	Remarks.
Vocabulary Section III.		
Hammers, claw, 28 oz.	1 per battery for all ordnance.	
Lines, carpenters	1 per mortar	6 yards of cord, used in pointing the mortar.
Vocabulary Section IV.		
Chalk, white ... ... lbs.	2 per mortar	For chalking the line. Annual supply.
Vocabulary Section V. (1).		
Beds, mortar 5½-inch	1 per 5½-inch mortar ...	With capsquares and coin.
4⅖-inch	1 per 4⅖-inch mortar ...	
Boards, range	According to position ...	These will be issued blank, any prepared by the O.C. R.A., the necessary materials being supplied by O.S.D.
Buckets, sponge, garrison ...	1 per 2 mortars	To hold water for damping the sponge.
Caps, mortar 5½-inch	1 per mortar in use* ...	To protect the bore.
4⅖-inch		
Caps, sponge, No. 1§	1 per sponge where necessary	To protect sponge head.
Cases, cartridge, No. 6	2 per mortar	To bring filled cartridges to mortar in action.
Clinometers, Watkin†	1 per battery	To adjust the elevation when requisite.
Clippers, portfire	1 per battery for all ordnance	To cut lighted portfires.
Flags, red, 12 ft. × 6 ft.	1 for each practice battery	*See* para. 100, and Appendix IV.
Garlands, rectangular	According to circumstances.	To hold a pile of 30 shells each. *See* note †, page 781.
,, Pins	4 per garland	Unite sides of garlands at corners.
Handspikes, common, 6 ft. ...	2 per mortar	For serving the mortar.
Horns, powder‡	1 per battery for all ordnance	For priming if required.
Lanyards, friction tube, garrison, No. 3.	2 per mortar	
Linstocks	1 per battery for all ordnance	To hold lighted slow match.
Ordnance, S.P., Mortars 5½-inch...	As authorised.	
4⅖-inch...		
Plummets, mortar	1 per mortar	Used in pointing mortars.
Prickers, vent, 12-inch	1 per mortar	To clear the vent.
Rods, pointing mortars	1 set of 2 per mortar ...	Used in pointing mortars when under cover.

* *See* note *, page 788.
† Clinometers, Watkin, will replace quadrants.
‡ Holds 1½ lbs. of gunpowder, included in proportions at page 792.
§ Only to be used for sponges in transit, or where stores are damp.

Digitized by Google

Equipment of 5½ and 4⅘-inch Bronze Mortars—*continued.*

TABLE 10—*continued.*	Proportions.	Remarks.
Spikes, gun, common	2 per mortar	For disabling ordnance.
Sponges, S.B. { 5½ inch mortar	1 per 5½-inch mortar ...	
{ 4⅘-inch ,, ...	1 per 4⅘-inch mortar ...	
Sticks, portfire	2 per battery for all ordnance	To hold lighted portfires.
Straps, tube box, long	1 per tube box	
Vent-servers*	1 per mortar	To place in vent while loading.
Vocabulary Section V. (2).		
Boxes, tube, garrison	1 per mortar	For copper friction tubes.
Cartridges, S.B., empty, serge { 5½-inch, 7 oz. / { 4⅘-inch, 5 oz.	1 per round of ammunition	*See* para. 73.
Fuzes, time† { common, No. 32 ...	{ 1 to 4, 5½-inch shell ... / { 9 to 10, 4⅘-inch shell ...	
Fuzes, time† { mortar, small, No. 36‡ ...	{ 3 to 4, 5½-inch shell ... / { 1 to 10, 4⅘-inch shell ...	
Gunpowder { L.G. ... ... / { pistol, riflepistol, F.G., R.F.G. or R.F.G.² / { shell (L.G.)	Sufficient to fill cartridges and shells issued empty	For cartridges. / For powder horns. / For bursting charges.
Implements, fuze and shell { bits, hookborer ...	6 per 2 mortars.	
{ Cylinders, wood, common	1 ,, 2 ,,	
{ Handles, hookborer ...	1 ,, 2 ,,	
{ Hooks, hookborer ...	1 ,, 2 ,,	
{ Keys, fuze and plug, G.S.	1 ,, 2 ,,	
Match { quick ... ... lbs.	½ per work in tin cylinder	For general purposes.
{ slow ... ... ,,	1 per 100 rounds	For lighting portfires, &c.
Portfires, common	2 per 100 rounds	For general use.
Shells, S.B., empty, common, riveted§ { 5½-inch mortar. / { 4⅘-inch mortar.	100 per mortar.	
Tubes, friction, copper, solid drawn.	1 per round	Issued in cylinders containing 25.

* Whipcord should be demanded separately for making the lanyards.

† The designation number is shown on the label of the cylinder or other package in which the fuze is packed. The number stamped on the fuze itself, denotes the number of the thousand manufactured.

‡ The small mortar fuze when used in 4⅘-inch shells must be secured in the fuze hole (which is of larger diameter than the fuze) by means of tow or other substance wound round it, to form a packing.

§ Shells for these mortars must be carefully gauged in the pieces themselves, which are of exceptionally small calibre.

Digitized by Google

EQUIPMENT OF 4·7-INCH Q.F. GUNS.

TABLE 11.	Proportions.	Remarks.
Vocabulary Section II. (1).		
Lamps, tracing	1 per gun.	
Vocabulary Section II. (2).		
Carts, shot	1 per district ...	For moving projectiles.
Drugs, gun, 5-ton		For moving ordnance up to 5 tons.
Vocabulary Section III.		
Chests, tool, filled No. 3 D ...	As authorised by para.	For repair of carriages.
,, 11 A ...	1 per work	
Bars, crow, 6-feet	1 per work	For general use.
Cans, oil, lubricating, G.S... ...	1 per gun ...	For use of ordnance artificers.
Drivers, screw, G.S., 24-inch	1 per gun	For general use.
Hammers, claw, 28 ozs. ...		
Spanners, McMahon, 15-inch ...	1 per gun	For tightening nuts, &c.
Spanners, Ordnance 1½-inch and 1⅝-inch; Artificers, double-ended 1¼ ,, ,, 1⅜ ,, ; 1 ,, ,, ⅞ ,, ; ¾ ,, ,, ⅝ ,, ; ½ ,, ,, ⅜ ,,	1 per work ...	For adjusting and tightening up bolt and nuts.
TOOLS, ORDNANCE.		
Tools, cleaning, examining, painting, and lacquering rifled ordnance ... ... sets	1 per district	For detail, *see* table A, pages 616 to 619.
Vocabulary Section IV.		
Brushes, water, carriage	2 per gun	For cleaning purposes.
Candles, magazine* ... ... lbs.	1 per lantern.	
Oil, mineral ... ...galls.	As required	For hydraulic buffers.
Vocabulary Section V. (1).		
Boards, range, fuze scale	1 per 2 guns of same nature, or 1 per gun where mounted singly.	To be provided locally.
Boxes, grease, 3 lbs....	1 per 3 guns or less ...	For general purposes.
Brushes, piasaba, Q.F. 4·7-inch, bore.	1 per work.	
Buckets, sponge, garrison... ...	1 per gun	For general use.
Caps, sponge, No. 7†	1 per sponge where necessary.	
Carriages, garrison Q.F. 4·7-inch	As authorised.	

* Supplied by Army Service Corps.
†Only to be used for sponges in transit, or where stores are damp.

Digitized by Google

Equipment of 4·7-inch Q.F. Guns—*continued.*

TABLE 11—*continued.*	Proportions.	Remarks.
Carriages, Q.F. 4·7-inch — SPECIAL IMPLEMENTS.		
Drivers, screw, cradle, cover screws		
Eyes, lifting cradle		
Loops, lifting, worm, also withdrawing axles, roller		
Spanners — hydraulic buffer No. 57	1 per carriage ...	For nuts of piston rod.
Spanners — hydraulic buffer ,, 58		For piston rod, gland, plug, tank cleaning and ring packing.
Spanners — cradle, lubricators		
Wrenches — pivot, No. 9 ...		For fixing or removing screws of elevating arc.
Wrenches — socket, plunger, controlling, running out		
Clamps, tangent sight, automatic	1 per gun	For clamping tangent sights.
Covers, breech, and shield, B.L., Q.F. 4·7-inch	1 per gun.	
Filters, hydraulic jack	1 per work	For filling hydraulic jacks.
Frames, store, hydraulic jack, G.S.	1 per work or per 4 jacks	For keeping jacks under pressure.
Gyns, triangle, with appurtenances, light, tubular	1 per sub-district ...	For mounting ordnance, &c.
Handspikes, common, 6-feet ...	2 per gun ...	
Jacks, hydraulic, G.S., 10 tons lifting	1 per work ...	For general purposes.
Jacks, screw, Clerk's	2 per work ...	
Lanterns, fighting	As authorised.	
Measures, hydraulic buffer, filling	1 per work	For filling hydraulic buffers.
Ordnance, Q.F. 4·7-inch	As authorised.	
Ordnance, Q.F. 4·7-inch — SPECIAL IMPLEMENTS.		
Extractors, cartridge...		
Levers, lengthening cam lever	1 per gun.	
Wrenches A		
Wrenches B		
Sights, Q.F., 4·7-inch fore ...		
Sights, Q.F., 4·7-inch tangent ...	1 per gun.	
Sponges, B.L., bore		
Staves, end, B.L.	1 per gun	For sponge and piasaba brush.
Tampeons, B.L., L.S.	1 per gun.	
Vocabulary Section V. (2).		
Adapters	20 per gun.	For cartridges fired with percussion tubes.
Boxes, cartridge, Q.F. 4·7-inch ...	68 per gun.	

Digitized by Google

Equipment of 4·7-inch Q.F. Guns—*continued.*

TABLE 11—*continued.*	Proportions.	Remarks.
Cartridges. Q.F. 4·7-inch — empty, service ...	6 per gun	For testing electrical communications, &c.
Q.F. 4·7-inch — filled, service* ...	400 per gun.	
Primers, electric	200 per sub-district (1 box)	For testing purposes in empty service cartridges.
Fuzes — No. 9, percussion, base, Armstrong	1 per round common shell.	
Fuzes — time and percussion, short, No. 55	1 per Shrapnel shell.	
Fuzes — time, sensitive, middle, No. 24	20 per cent. spare for Shrapnel shell	For long ranges.
Gauges, shell ring, Q.F. — band, 4·7-in., high	1 per work.	
Gauges, shell ring, Q.F. — body, 4·7-in., low	1 per work.	
Implements, fuze and shell, Keys — fuze, universal ...	1 per gun.	
Implements, fuze and shell, Keys — fuze and plug, Armstrong	1 per 2 guns or less.	
Implements, fuze and shell, Keys — 4·7-inch, inserting primer	1 per 2 guns or less.	
Implements, fuze and shell, Keys — 4·7-inch, removing primer	1 per 2 guns or less.	
Plugs, fuze hole, G.S.	1 per Shrapnel shell.	
Primers, Shrapnel shell	1 per empty Shrapnel shell.	
Shells, filled, Q.F. 4·7-inch — common, forged steel	260 per gun.	
Shells, filled, Q.F. 4·7-inch — ,, iron	100 ,, ,,	
Shells, filled, Q.F. 4·7-inch — Shrapnel, forged steel	40 ,, ,,	
Tubes, vent — percussion	100 per gun.	
Tubes, sealing — percussion, drill ...	5 ,, ,,	
Vocabulary Section VII. (1).		
Stands, telescope, 2½-inch socket...	1 per telescope.	
Telescopes, 3-feet	1 per work.	

* Q.F. cartridges, after being fired, will be immersed as soon as possible in warm fresh water (with a little soda, about 1 lb. to 2 gallons of water, dissolved in it) for two or three hours, and then taken out and thoroughly dried.

The cases, when dry, are to be repacked in the boxes in which they were supplied, and returned to store. The fired cases are not, on any account, to be repacked in boxes containing unfired cartridges.

Digitized by Google

EQUIPMENT OF HOTCHKISS, Q.F., 6-PR. GUN, MARK I., ON ELASTIC STAND.

TABLE 12.	Proportions.	Remarks.
Vocabulary Section V. (1).		
Ordnance, Q.F., Hotchkiss, 6-pr., Mark I.	As authorised.	
SPARE PARTS.		
Buffer-tubes	1 to 10 guns or less per work.	
Bushes, plate, wedge...	2 per gun.	
Clamps, tangent, sight, automatic	1 per 5 guns or less per work.	
Cranks		
Crank handles	1 per 10 guns or less per work.	
Extractors	1 per gun.	
Hammers, firing		
Hooks, drill		
Pins, firing	6 ,,	
Plates, wedge	1 to every 5 or less number of wedges allowed, per sub-district	For guns fitted with interchangeable wedge plates.
Rocking-shafts	1 to 10 guns or less per work.	
Screws trigger guard, fixing ..	3 per gun.	
Screws trigger pivot	1 ,,	
Screws crank-handle, set	1 ,,	
Screws stop wedge	1 ,,	
Shoulder-pieces	1 to 10 guns or less per work.	
Sights fore	1 to 5 guns or less per work.	
Sights tangent (with range strip)	1 to 5 guns or less per work.	
Springs crank-handle	1 per gun.	
Springs main	4 ,, ,,	
Springs trigger-sear	2 ,, ,,	
Studs steadying shoulder-piece	1 to 10 guns or less per work.	
Studs fixing, shoulder-piece ...	1 to 10 guns or less per work.	
Triggers...	1 to 5 guns or less per work.	
Trigger-guards	1 per gun.	
Trigger-sears	1 to 10 guns or less per work.	
Wedges		
IMPLEMENTS.		
Brushes cleaning	2 per gun.	
Brushes sponge with rod ..	1 ,, ,,	
Brushes sponge without rod ...	2 ,, ,,	
Cans, oil	1 per gun.	
Drivers, screw		
Extractors, hand		
Tommies	... ...	For dismounting.
Boxes, for implements		
Pivots and sockets, consisting of—	1 per carriage.	
Pivot... ... ... metal		
Socket ... ... ,,		
Stands, elastic		
Shields, with fittings... ... steel		

Digitized by Google

EQUIPMENT OF HOTCHKISS, Q.F., 6-PR. GUN, MARK II., ON RECOIL CONE AND EMBRASURE MOUNTINGS.

TABLE 13.	Proportions.	Remarks.
Vocabulary Section V (1).		
Ordnance, Q.F., Hotchkiss, 6-pr., Mark II.	As authorised.	
SPARE PARTS.		
Bracket, trigger-piece	1 to 5 guns or less per work.	
Bushes, plate, wedge...	2 per gun.	
Clamps, tangent sight (automatic)	1 to 5 guns or less per work.	
Cranks		
Crank handles	1 to 10 guns or less per work.	
Extractors	1 per gun.	
Hammers, firing		
Hooks, drill		
Pins, firing	6 ,, ,,	
Plates, wedge	1 to every 5 or less number of wedges allowed, per sub-district	For guns fitted with interchangeable wedge plates
Rocking-shafts	1 to 10 guns or less per work	
Screws fixing bracket, trigger-piece.	3 per gun	
Screws pivot trigger-piece ...	1 ,, ,,	
Screws set, crank-handle		
Screws stop, wedge		
Sights fore	1 to 5 guns or less per work.	
Sights tangent (with range strip)		
Springs crank handle	1 per gun.	
Springs main	4 ,, ,,	
Springs trigger-sear	2 ,, ,,	
Studs steadying shoulder-piece	... ...	Not required with recoil cone mountings, but are supplied with the gun in case the gun should be mounted on a non-recoil mounting.
Studs fixing shoulder-piece ...		
Trigger-pieces	1 to 5 guns or less per work.	
Trigger-sears	1 per gun.	
Wedges	1 to 10 guns or less per work.	
IMPLEMENTS.		
Boxes, implements	1 per gun.	
Brushes cleaning	2 ,, ,,	
Brushes sponge without rod...	2 ,, ,,	
Brushes sponge with rod ...		
Cans, oil	1 ,, ,,	
Drivers, screw		
Extractors, hand		
Tommies...	... ...	For dismounting.
Carriages, Q.F., recoil, 6-pr., Hotchkiss (Embrasure).		
Pivots, consisting of—		
Crosshead ... ...metal		
Cradle ... ... steel		
Pivot ... ... ,,		
Shoulder-pieces	1 per carriage.	
Sockets ... ...metal		
Saddles ... ... steel		
Shields ... ... ,,		

Digitized by Google

Equipment of Hotchkiss, Q.F., 6-pr. Gun, Mark II., on Recoil Cone and Embrasure Mountings—*continued.*

TABLE 18—*continued.*	Proportions.	Remarks.
SPARE PARTS.		
Keys, split, round, loop head, $\frac{3}{8}$-in. × $2\frac{3}{4}$-in.	3 per carriage.	
Packings, leather, consisting of—		Diam. Hole.
Rings, leather, U section: gland, piston	4 per carriage	2·1 1·25 ·4 wide.
Rings, leather, U section: gland, ram, automatic.	2 ,, ,, ...	2·55 1·75 ·4 wide. ·125 leather.
Washers, leather: cap, cylinder	4 ,, ,, ...	4·55 3·8
Washers, leather: hole, filling and run off.	8 ,, ,, ...	1·25 ·8
	18=2 sets of 9.	
Plugs, filling hole, (2) with chain and loop, G.S.	1 per carriage.	
Screws: capsquare, crosshead ...	1 ,, ,,	
Screws: fixing transom	2 ,, ,,	
Springs: cylinder recoil	1 ,, ,,	
Springs: shoulder-piece	1 ,, ,,	
Strips, metal, cylinder, recoil ...	1 ,, ,,	
IMPLEMENTS.		
Boxes, implements, and spare parts	1 per carriage.	
Drifts, steel	1 ,, ,,	
Hammers	1 ,, ,,	
Handles, clamping screws, capsquares.	1 ,, ,,	
Measures, filling buffer with tube	1 ,, ,,	
Spanners: cap, cylinder, recoil, gland, and piston.	1 ,, ,,	
Spanners: plugs and screws, transom,	1 ,, ,,	
Spanners: nut, socket, and cone	1 ,, ,,	
Tommies, steel...	1 ,, ,,	
Carriages, Q.F., recoil, 6-pr., Hotchkiss (Cone).		
SPARE PARTS.		
Keys, split, round loop-head, $\frac{3}{8}$-in. × $2\frac{3}{4}$-in.	3 per carriage.	
Packings, leather, consisting of—		Diam. Hole.
Rings, leather, U section: gland, piston	4 per carriage	2·1 1·25 ·4 wide.
Rings, leather, U section: gland, ram, automatic.	2 ,, ,, ...	2·55 1·75 ·4 wide. ·125 leather.
Washers, leather: cap, cylinder	4 ,, ,, ...	4·55 3·8
Washers, leather: hole, filling and run off.	8 ,, ,, ...	1·25 ·8
	18=2 sets of 9.	

Digitized by Google

Equipment of Hotchkiss, Q.F., 6-pr. Gun, Mark II., on Recoil Cone and Embrasure Mountings—*continued.*

TABLE 13—*continued.*	Proportions.	Remarks.
Plugs, filling hole (2), with chain and loop, G.S.	1 per carriage.	
Screws { capsquare, crosshead ...	1 ,, ,,	
Screws { fixing, transom	2 ,, ,,	
Springs { cylinder, recoil	1 ,, ,,	
Springs { shoulder-piece	1 ,, ,,	
Strips, metal cylinder, recoil ...	1 ,, ,,	
IMPLEMENTS.		
Boxes, implements, and spare parts	1 per carriage.	
Drifts, steel	1 ,, ,,	
Hammers	1 ,, ,,	
Handles, clamping screws, capsquares.	1 ,, ,,	
Measures, filling buffer with tube	1 ,, ,,	
Spanners { cap, cylinder, recoil, gland, and piston.	1 ,, ,,	
Spanners { plug and screws, transom.	1 ,, ,,	
Spanners { nut, socket, and cone	1 ,, ,,	
Tommies, steel	1 ,, ,,	

Digitized by Google

EQUIPMENT OF NORDENFELT, Q.F., 6-PR. GUN, MARK III., ON RECOIL CONE AND EMBRASURE MOUNTINGS.

TABLE 14.	Proportions.	Remarks.
Vocabulary Section V. (1).		
Ordnance, Q.F., Nordenfelt, 6-pr., Mark III.	As authorised.	
SPARE PARTS.		
Brackets, trigger-piece	1 to 5 guns or less per work.	
Clamps, tangent, sight (automatic)		
Extractors		
Levers, trigger...		
Pins, firing	6 per gun.	
Screws, fixing { bracket, trigger-piece ...	2 ,,	
{ shield, loading	1 ,,	
Sights { fore	1 to 5 guns or less per work.	
{ tangent (with range strip)		
Springs { indicator, drill-stop ...	2 per gun.	
{ main	4 ,,	
{ trigger-piece	2 ,,	
Tappets, lever, trigger	1 to 5 guns or less per work.	
Trigger-pieces	1 per gun.	
IMPLEMENTS.		
Boxes, implements	1 per gun.	
Brushes { cleaning	2 ,,	
{ sponge { without rod	1 ,,	
{ with rod ...		
Cans, oil		
Drifts { brass	2 ,,	
{ steel		
Drivers, screw	1 ,,	
Hammers, handled, 28 oz.		
Carriages, Q.F., recoil, 6-pr. Nordenfelt (Embrasure.)		
Pivots, consisting of—		
Crosshead ... ... metal	1 per carriage.	
Cradle ... ... steel		
Pivot ... ... ,,		
Shoulder-pieces		
Saddles ... ... steel		
Sockets ... ... metal		
Shields ... ... steel		
SPARE PARTS.		
Keys, split, round loop head. $\frac{3}{8}$-in. × $2\frac{1}{4}$-in.	3 per carriage.	
Packings, leather, consisting of—		Diam. Hole.
Rings, leather, U section { gland, piston	4 ,, ,, ...	2·1 1·25 ·4 wide. ·125 leather.
{ gland ram, automatic	2 ,, ,, ...	2·55 1·75 ·4 wide. ·125 leather.
Washers, leather { cap, cylinder	4 ,, ,, ...	4·55 3·8
{ hole, filling and run off.	8 ,, ,, ...	1·25 ·8
	18 = 2 sets of 9.	
Plugs, filling, hole (2), with chain and loop, G.S.	1 per carriage	
Screws { capsquare, crosshead ...	2 ,, ,,	
{ fixing, transom	1 ,, ,,	

Digitized by Google

Equipment of Nordenfelt, Q.F., 6-pr. Gun, Mark III., on Recoil Cone and Embrasure Mountings—*continued.*

TABLE 14—*continued.*	Proportions.	Remarks.
Springs { cylinder recoil	1 per carriage.	
shoulder-piece	1 per carriage.	
Strips, metal, cylinder recoil ...	1 ,, ,,	
IMPLEMENTS.		
Boxes, implements and spare parts	1 per carriage.	
Drifts, steel	1 per carriage.	
Hammers	1 per carriage.	
Handles, clamping screws, cap-squares	1 per carriage.	
Measures, filling buffer, with tube	1 per carriage.	
Spanners { cap, cylinder, recoil, gland, and piston.	1 per carriage.	
plugs and screws, tramsom.	1 per carriage.	
nuts, socket and cone	1 per carriage.	
Tommies, steel...	1 per carriage.	
Carriages, Q.F., recoil, 6-pr. Nordenfelt (Cone.)		
SPARE PARTS.		
Keys, split, round loop-head, $\frac{3}{8}$-in. × $2\frac{3}{4}$-in.	3 per carriage.	
Packings, leather, consisting of—		Diam. Hole.
Rings, leather, U section { gland, piston	4 ,, ,, ...	2·1 1·25 ·4 wide. ·125 leather.
gland ram, automatic	2 ,, ,, ...	2·55 1·75 4 wide. ·125 leather.
Washers, leather { cap, cylinder	4 ,, ,, ...	4·55 3·8
hole filling and run off.	8 ,, ,, ...	1·25 ·8
	18=2 sets of 9.	
Plugs, filling hole (2), with chain and loop, G.S.	1 per carriage.	
Screws { capsquare, crosshead ...	1 per carriage.	
fixing, tramsom	2 ,, ,,	
Springs { cylinder. recoil	1 per carriage.	
shoulder-piece	1 ,, ,,	
Strips, metal cylinder recoil ...	1 per carriage.	
IMPLEMENTS.		
Boxes, implements and spare parts	1 per carriage.	
Drifts, steel	1 per carriage.	
Hammers	1 per carriage.	
Handles, clamping screws, cap-squares.	1 per carriage.	
Measures, filling buffer, with tube	1 per carriage.	
Spanners { cap, cylinder, recoil, gland and piston.	1 per carriage.	
plugs and screws, transom.	1 per carriage.	
nuts, socket and cone	1 per carriage.	
Tommies, steel...	1 per carriage.	

Digitized by Google

EQUIPMENT OF HOTCHKISS, Q.F., 3-PR. GUN, MARK II, ON TRAVELLING CARRIAGES.

TABLE 15.	Proportions.	Remarks.
Ordnance, Q.F., Hotchkiss, 3-pr., Mark II.	As authorised.	
SPARE PARTS.		
Bushes, plate, wedge	2 per gun.	
Clamps, tangent sight (automatic)	1 to 5 guns or less per work.	
Cranks		
Crank handles, ...	1 to 10 guns or less per work.	
Extractors	1 per gun.	
Hammers, firing		
Hooks, drill	1 per gun.	
Pins, firing	6 ,, ,,	
Plates, wedge	1 to every 5 or less number of wedges allowed.	For guns fitted with interchangeable wedge plates.
Rocking-shafts	1 to 10 guns or less per work.	
Screws — trigger, bracket, fixing ...	3 to 10 guns or less per work.	Not supplied with the gun when mounted on field carriage.
Screws — trigger pivot	1 per gun.	
Screws — crank handle, set	1 ,, ,,	
Screws — stop, wedge...		
Sights — fore	1 to 5 guns or less per work.	
Sights — tangent (with range strip)		
Springs — crank handle	1 per gun.	
Springs — main	4 ,, ,,	
Springs — trigger sear	2 ,, ,,	
Studs — steadying shoulder-piece ...	1 to 10 guns or less per work.	When mounted on side carriage only
Studs — fixing shoulder-piece ...		
Trigger-sears	1 per gun.	
Wedges	1 to 10 guns or less per work.	
IMPLEMENTS.		
Boxes, implements	1 per gun.	
Brushes, cleaning	2 ,, ,,	
Brushes, sponge — without rod ...	2 ,, ,,	
Brushes, sponge — with rod ...		
Cans, oil	1 ,, ,,	
Drivers, screw		
Extractors, hand		
Tommies	1 ,, ,, ...	For dismounting.
Carriages, travelling, Q.F., 3-pr.	1 per gun.	
Sockets, screw elevating carriage, travelling, Q.F., 3-pr.	1 per carriage.	

Digitized by Google

Equipment of Hotchkiss, Q.F., 3-pr. Gun, Mark II, on Travelling Carriages—*continued.*

TABLE 15—*continued.*	Proportions.	Remarks.
SPARE PARTS.		
Keys (split, round, loop head, $\frac{1}{4}$-in.)	2 per carriage.	
Keys (steel, hook, limber (with chain), $\frac{1}{16}$-in.)	1 per 5 carriages or less per work.	
Plugs, filling hole (with chain) ...		
Pins, linch, 3rd class	1 per carriage.	
Packings, leather, hydraulic buffer (set of 8) ... ... sets		
Pads, india rubber, for brake ...		
Pins, shaft, iron (with collar and split pin)	1 per 5 carriages or less per work.	
Screws, steel, capsquare		
Springs, spiral, hydraulic buffer ...		
Washers, drag...	1 per carriage.	
IMPLEMENTS.		
Drifts, steel	1 per carriage.	
Hammers, 28 oz.		
Spanners (cap and gland, hydraulic buffer and nuts, brake rod)		
Spanners (nuts, piston, and nuts, brake rod)		
Spanners (with tommy) (plugs, drain and filling, and screw, capsquare)		
Spanners, McMahon's, 12-in. ...		
Limbers, travelling, Q.F., 3-pr. ...	1 per carriage.	
Ropes, drag, light ... ... pairs	1 per gun.	

Digitized by Google

EQUIPMENT OF NORDENFELT, Q.F., 3-PR. GUN, ON TRAVELLING CARRIAGE.

TABLE 16.	Proportions.	Remarks.
Vocabulary Section V. (1).		
Ordnance, Q.F., Nordenfelt, 3-pr.	As authorised	With sights and fittings.
Lanyards, Q.F., 3-pr., Nordenfelt	2 per gun.	
SPARE PARTS.		
Brackets trigger	1 to 5 guns or less per work.	
Clamps, tangent sight (automatic)		
Extractors		
Lanyards	1 per gun.	
Levers, trigger...	1 to 5 guns or less per work.	
Pins, firing	6 per gun.	
Screws, fixing, bracket trigger ...	4 ,,	
Sights fore	1 to 5 guns or less per work.	
Sights tangent (with range strip)		
Springs indicator, drill stop ...	2 to 5 guns or less per work.	
Springs main	4 to 5 guns or less per work.	
Tappets, lever, trigger	1 to 5 guns or less per work.	
Triggers...	1 per gun.	
IMPLEMENTS.		
Boxes, implements	1 per gun.	
Brushes cleaning	2 ,,	
Brushes sponge without rod...	1 ,,	
Brushes sponge with rod ...		
Cans, oil		
Drifts brass		
Drifts steel		
Drivers, screw, double ended ...	1 ,,	
Hammers, handled		
Tommies, steel	1 ,,	
Carriages, travelling, Q.F., 3-pr....	1 ,,	
Handspikes, traversing	1 per carriage.	
SPARE PARTS.		
Keys split, round, loop-head $\frac{1}{4}$-in.	2 per carriage.	
Keys split, round, loop-head $\frac{7}{16}$-in.		
Keys steel, hook, limber (with chain)	1 per 5 carriages or less per work.	
Plugs, filling hole (with chain) ...		
Pins, linch, 3rd class	1 per carriage.	
Packings, leather, hydraulic buffer (set of 8) ... ... sets		
Pads, india rubber, for brake ...		
Pins, shaft, iron (with collar and split key)	1 per 5 carriages or less per work.	
Screws, steel, capsquare		
Springs, spiral, hydraulic buffers ...		
Washers, drag	1 per carriage.	

Digitized by Google

Equipment of Nordenfelt, Q.F., 3-pr. Gun, on Travelling Carriage—*continued.*

TABLE 16—*continued.*	Proportions.	Remarks.
IMPLEMENTS.		
Drifts, steel	1 per carriage.	
Hammers, 28 oz.		
Spanners { cap and gland, hydraulic buffer, and nuts, brake rod		
Spanners { nuts, piston, and nuts, brake rod		
Spanners, (with tommy) { plugs, drain and filling, and screw, capsquare		
Spanners, McMahon's, 12-in. ...		
Limbers, travelling, Q.F., 3-pr. ...	1 per carriage.	
Ropes, drag, light ... ... pairs	1 per gun.	

TOOLS, ORDNANCE.

TABLE 17.	Proportions.	Remarks.
Vocabulary Section III.		
TOOLS, ORDNANCE.		
Tools, examining ordnance, quick-firing ... ... sets	1 per district	For detail of tools, *see* pages 616 to 620.

Digitized by Google

AMMUNITION, &c., FOR HOTCHKISS AND NORDENFELT QUICK-FIRING ORDNANCE.

TABLE 18.	Proportions.	Remarks.
Vocabulary Section V. (2).		
Boxes { ammunition, quick-firing { 6-pr. 11 / 3-pr. 16	73 per gun. / 50 ,,	
Boxes { cartridge cases, quick-firing, saluting ‡ { 6-pr. ... / 3-pr. ...		
Boxes { cartridges, quick-firing, saluting, tools ‡ { 6-pr. ... / 3-pr. ...		
Cartridges, quick-firing† { 6-pr. { steel sheel ... / common shell	400 ,, / 400 ,,	
Cartridges, quick-firing† { 3-pr. { steel shell ... / common shell	400 ,, / 400 ,,	
Cartridges, quick-firing, saluting†† { Primers, 6-pr. or 3-pr.... ...	... ...	In boxes, tool.
Cartridges, quick-firing, saluting†† { Cases { 6-pr. ... ... / 3-pr.	... ...	Solid drawn, 20 in a box.
Cartridges, quick-firing, saluting†† { Shalloon, 6-pr. or 3-pr. ...		
Cartridges, quick-firing, saluting†† { Wads { felt { 6-pr. ... ... / 3-pr.	... ...	In boxes, tool.
Cartridges, quick-firing, saluting†† { Wads { paper { 6-pr. ... ... / 3-pr.	... ...	In boxes, tool.
Cases, powder, metal lined, half ‡ ...	... ...	To contain saluting cartridges.
Clips, cartridge, quick-firing { 6-pr. / 3-pr.	800 per gun. / 800 ,,	1 issued on the base of each cartridge.
Tools, cartridge, quick-firing, saluting ‡ { drivers, screw / primer / rods, 12·7-inch ...		

† Quick-firing cartridge cases, after being fired, will be immersed as soon as possible in warm fresh water (with a little soda dissolved in it, about 1 lb. to 2 gallons of water) for two or three hours, and then taken out and thoroughly dried.

The service cases, when dry, are to be repacked, together with the clips, in the boxes in which they were supplied, and returned into store. The fired cases are not, on any account, to be repacked in boxes containing unfired cartridges.

The saluting cases, after being dried, will be reprimed and replaced in the box.

‡ Saluting ammunition will only be used when specially authorised.

Note,—The above table applies to Mark III ammunition only.
6-pr. and 3-pr. ammunition will only be issued in complete boxes.
Boxes are on no account to be opened to make up issues.

Digitized by Google

MACHINE GUNS, GARDNER, 0·4-INCH AND 0·45-INCH NORDENFELT, 0·45-INCH; AND MAXIM, 0·45-INCH; ON PARAPET CARRIAGE AND INFANTRY CARRIAGE.

TABLE 10.	Proportions.	Remarks.
Guns, Gardner, 2-Barrel, 0·4-inch.	... ...	With 1 Cartridge-feeder, 60 Cartridge-holders in 3 Cartridge-holder Boxes, and 1 Stop-off Block, for parapet carriage.
SPARE PARTS.		
Barrels	1 per gun.	
Extractors	4 ,,	
Hammers	1 ,,	
Handles-crank		
Locks left		
Locks right		
Pins ... extractor	4 ,,	
Pins ... firing		
Sights fore	1 ,,	
Sights tangent, with fixing pin...		
Springs lock	4 ,,	
Springs tangent sight	1 ,,	
IMPLEMENTS.		
Drifts, copper and steel 6″ × 11/16″		
Drifts, copper and steel 6″ × 7/16″		
Drifts, copper and steel 6″ × 19/32″		
Plugs, clearing, Mark II.		
Punches 5/32″	1 per gun.	
Punches 3/16″		
Rods, cleaning		
Spanners		
Twisters, barrel		
Carriages, parapet*	... ...	With 1 small Tool case.
SPARE PARTS.		
Springs brake	2 per carriage.	
Springs traversing handle, with screw.	1 per carriage.	
Screws, clamping, with hand-nut...		
IMPLEMENTS.		
Spanners, shifting	1 per carriage.	
Tommies	2 ,,	
Guns, Gardner, 2-Barrel, 0·45-inch.	... ...	M.-H., with 1 Cartridge-feeder, 1 Stop-off block, and 96 Cartridge-holders (for carriage, field, infantry), and 60 cartridge holders, in 3 cartridge-holder boxes (for parapet carriages).
SPARE PARTS.		
Barrels	1 per gun.	
Extractors	4 ,,	
Hammers	1 ,,	
Handles, crank...		

* 1 pair of light drag ropes allowed for each mounting at Hong Kong.

Digitized by Google

Machine Guns—*continued.*

TABLE 19—*continued.*	Proportions.	Remarks.
Locks { left ... ... / right	1 per gun.	
Pins { extractor ... ... / firing ... ... / joint for crosshead	4 ,, / 1 ,, ...	For field carriages only.
,, ,, elevating screw ...	4 ,,	
Springs, { lock... ... ... / tangent sight	1 ,,	
Sights { fore ... ... / tangent, with fixing pin		
IMPLEMENTS.		
Drifts, copper and steel { 6″ × 11/16″ / 6″ × 7/16″ / 6′ × 9/32″		
Plugs, clearing, Mark II.	1 per gun.	
Punches { 5/32 ... ... / 3/16		
Rods, cleaning		
Spanners		
Twisters...		
Carriages, field infantry.	As authorised.	
SPARE PARTS.		
Cotters, each with 2 chains, 1 stud, and 1 split pin.	2 per carriage.	
Drag-washers	1 ,,	
Nuts for shaft bolts	2 ,,	
Pins { ammunition boxes, with chain, ring, and stud.	1 ,,	
Pins { linch, with leather thong ...	2 ,,	
Pins { split, for shaft-bolt	As authorised	With 1 tool case for axletree.
Carriages, parapet		
SPARE PARTS.		
Screws, clamping, with hand nut...	1 per carriage.	
Springs { brake	2 ,, ,,	
Springs { traversing handle, with screw.	1 ,, ,,	
IMPLEMENTS.		
Spanners, shifting	1 ,, ,,	
Tommies	2 ,, ,,	
Guns, Nordenfelt. 3-Barrel ...	... ...	M.H.C., with 1 Distributor, 1 Freed Guide, and 100 FeedBoxes(Paper), for carriage field Infantry.
SPARE PARTS.		
Barrels	1 per gun.	
Distributors		
Extractors	3 ,,	
Feed-guides	1 ,,	
Hammers	3 ,,	
Hand-levers	1 ,,	
Hopper-catches		
Pins, firing	3 ,,	
Sights { fore, with fixing screws / tangent with split pin ...	1 per gun.	
Springs { lock	6 ,,	
Springs { sight tangent	1 ,,	
Springs { trigger comb	2 ,,	

Digitized by Google

Machine Guns—*continued*

TABLE 10—*continued.*	Proportions.	Remarks.
IMPLEMENTS.		
Cans, oil	1 per gun.	
Drifts, brass wire	2 ,,	
Screw-drivers, for extractor	} 1 ,,	
Plugs, clearing		
Rods, cleaning		
Boxes, spare parts, &c.		
Guns, Maxim, 0·45-inch	... ...	M.-H., with 4 Feed Belts in 4 Ammunition Boxes, for parapet carriage.
SPARE PARTS.		
Handles, crank	1 per gun.	
Feed-blocks, complete	1 ,,	
Gibs	2 ,,	
Levers, extractor — right	1 ,,	
Levers, extractor — left	1 ,,	
Locks, complete	1 ,,	
Pins — axis — trigger	2 ,,	
Pins — axis — sear	2 ,,	
Pins — axis — lock, spring	2 ,,	
Pins — axis — tumbler	4 ,,	
Pins — firing	2 ,,	
Pins — fixing — axis pins	24 ,,	
Pins — fixing — extractor spring	4 ,,	
Pins — joint — crosshead	1 ,,	
Pins — joint — elevating screw	1 ,,	
Sears	1 ,,	
Sights — fore	1 ,,	
Sights — tangent, complete	1 ,,	
Springs — fusee, complete, with fittings.	2 ,,	
Springs — trigger bar	2 ,,	
Springs — shutter	2 ,,	
Springs — safety catch	2 ,,	
Springs — buffer	4 ,,	
Springs — cover, lock	2 ,,	
Springs — cover	4 ,,	
Springs — ejecting tube	2 ,,	
Springs — extractor	2 ,,	
Springs — feed block	4 ,,	
Springs — feed block slide	4 ,,	
Springs — gib	2 ,,	
Springs — lock	4 ,,	
Springs — rod, connecting	2 ,,	
Springs — sear	2 ,,	
Springs — side plate	2 ,,	
Springs — tangent sight slide	2 ,,	
Springs — tangent sight	2 ,,	
Tumblers	1 ,,	
Triggers	1 ,,	
Boxes, spare parts, &c.	1 ,,	
IMPLEMENTS.		
Balance, spring	1 ,,	
Drivers, screw	3 ,,	
Funnels	1 ,,	
Keys, gib	1 ,,	
Pliers, cutting	1 prs.	
Plugs, clearing, Maxim, M.-H. chamber.*	1 ,,	

* A certain number of the earlier issues of these guns are allowed two cleaning plugs. One of Mark I and one of Mark II. Those of later issues are supplied with the Mark II only.

Digitized by Google

Machine Guns—*continued.*

TABLE 10—*continued.*	Proportions.	Remarks.
Punches (Nos. 1, 2, 3 and 4) ...	4 per gun.	
Rods, cleaning	1 ,,	
Spanners, shifting	1 ,,	
Tools, belt, repairing...	1 ,,	
Water-bags	1 ,,	
Water vessels, brass...	1 ,,	
Wrenches, pin...	1 ,,	
ARTICLES FOR REPAIR.		
Boxes, strip, eyelet, &c.	2 ,,	
Eyelets, for repairing feed belts ...	500 ,,	
Strips { long	50 ,,	
Strips { short	100 ,,	
Packing, { 11 inches long ...pieces	2 ,,	
Asbestos { 5 yards long ... ,,	1 ,,	
Carriages { parapet, machine gun, Maxim / field, infantry ...	As authorised.	
SPARE PARTS.		
Bolts, with nuts, securing top shield.	1 per carriage.	
Nuts, 1-inch, bolt, bracket pivot ...		
Pins { connecting, gun		
Pins { linch, 3rd class		
Pins { split ·2″ × 1·75″ ...		
Pins { split ·25″ × 2·5″ ...		
Pins { loop-head ·15″ × 1·75′ ...	2 ,,	
Pins { loop-head ·1875″ × 1·75″...		
Pins { taper ... ·1575″ × 1·625″		
Pins { taper ... ·2″ × 2″... ...		
Shafts { off, with propstick ...	1 per 4 carriages.	
Shafts { near, with propstick, slat, and pin, and chain for securing slat		
Springs { flat, clamp gear, traversing	1 per carriage.	
Springs { catch, securing carrier...		
Washers, drag, 3rd class		
IMPLEMENTS.		
Spanners, McMahon's 12-inch ...	1 ,,	

AMMUNITION FOR 0·4-INCH AND 0·45-INCH GARDNER GUN AND 0·45-INCH MAXIM GUN.

TABLE 20.	Proportions.	Remarks.
Cartridges, machine gun, ball, 0·4-inch	10,000 per gun.	
Cartridges, small-arm, ball, M.-H. rifle, solid case (0·45-inch M.-H. chambered guns)		

Digitized by Google

(Eq. R.)

EQUIPMENT OF GUNS AND HOWITZERS FOR MOVABLE ARMAMENTS.

TABLE 21.

	Proportions (per piece).														Remarks.
	B.L. Guns.		R.B.L. Guns.				R.M.L. Guns.					R.M.L. Howitzers.			
												8-inch.			
	5-inch.	4-inch.	40-pr.	20-pr.	12-pr.	9-pr.	40-pr.	25-pr.	16-pr.	13-pr.	9-pr.	70-cwt.	48-cwt.	6·6-inch.	6·3-inch.	
Vocabulary Section II. (1).																
Buckets, water, G.S., leather	1	1	1	1	1	1	1	1	1	1	1	1	1	1	1	To hold water for damping the sponge.
Colours { camp	2	2	2	2	2	2	2	2	2	2	2	2	2	2	2	For laying out the line of fire.
Colours { camp, Cases	2	2	2	2	2	2	2	2	2	2	2	2	2	2	2	
Lamps, tracing	2	2	...	...	...	...	2	2	...	...	...	2	2	2	2	
Vocabulary Section II. (2).																
Carts* { hand, common	*e*	*e*	*e*	*e*	*e*	*e*	*e*	*e*	*e*	*e*	*e*	*e*	*e*	*e*	*e*	For supply of ammunition.
Carts* { trench	*f*	*f*	*f*	*f*	*f*	*f*	*f*	*f*	*f*	*f*	*f*	*f*	*f*	*f*	*f*	For supply of projectiles, &c.
Jacks, lifting, general service	...	...	...	...	*a*	*a*	...	...	*a*	*a*	*a*	...	...	...	...	
Limbers, sling wagon, 6 tons	...	...	...	...	...	...	...	...	...	...	...	*g*	*g*	*g*	*g*	
Wagons, sling, 6 tons	...	...	...	...	...	...	...	...	...	...	...	*g*	*g*	*g*	*g*	

a. 1 per 2 pieces or less number.
e. 1 ,, piece for extended positions up to 400 yards.
f. 1 per piece for extended positions.
g. 1 ,, district if necessary.
* Where these are not available other means of transport will be adopted.

Digitized by Google

Equipment of Guns and Howitzers for Movable Armaments—*continued.*

TABLE 21—*continued.*

	Proportions (per piece).														Remarks.
	B.L. Guns.		R.B.L. Guns.				R.M.L. Guns.					R.M.L. Howitzers.			
												8-inch.			
	5-inch.	4-inch.	40-pr.	20-pr.	12-pr.	9-pr.	40-pr.	25-pr.	16-pr.	13-pr.	9-pr.	70-cwt.	46-cwt.	6·6-inch.	6·3-inch.	
Vocabulary Section III.																
Chests, tool, empty (with tools, shown in Appendix) — facing — 40-pr.	...	...	*g*	...	...	...	...	...	...	...	...	...	...	...	...	For repairing guns.
Chests, tool, empty (with tools, shown in Appendix) — R.B.L. — 20-pr.	...	...	...	*g*	...	...	...	...	...	...	...	...	...	...	...	For repairing guns.
Chests, tool, empty (with tools, shown in Appendix) — guns — 12 or 9-pr.	...	...	...	...	*g*	*g*	...	...	...	...	...	...	...	...	...	For repairing guns.
Chests, tool, empty (with tools, shown in Appendix) — special, repairing R.B.L. guns, land service	...	...	*i*	*i*	*i*	*i*	...	...	...	...	...	...	...	...	...	For repairing guns.
Chests, tool, filled — No. 3 E.	...	*g*	*g*	...	...	...	...	*g*	*g*	*g*	*g*	*g*	*g*	*g*	*g*	*See* pages 715 to 720.
Chests, tool, filled — „ 3 G.	...	...	...	*g*	*g*	*g*	*g*	...	...	...	...	...	...	...	...	*See* pages 715 to 720.
Axes — felling, curved helve	...	1	1	...	...	...	...	1	1	1	1	1	1	1	1	
Axes — pick — heads, 6½ lbs.	...	1	1	1	1	1	1	1	1	1	1	1	1	1	1	
Axes — pick — helves, 34½ inches	...	1	1	1	1	1	1	1	1	1	1	1	1	1	1	
Bits, vent, Armstrong	...	...	...	*c*	*c*	*c*	*c*	...	...	...	...	...	...	...	...	For removing irregularities in the vent.
Cans, oil, lubricating — G.S.	...	*a*	*a*	*a*	*a*	*a*	*a*	*a*	*a*	*a*	*a*	...	...	...	...	
Cans, oil, lubricating — smith's	...	...	...	...	...	...	...	...	...	...	...	*d*	*d*	*d*	*d*	
Drivers, screw, general service, 6-inch		1	1	1	...	...	...	...	...	...	...	1	1	1	1	For general use.
Files, second cut, half round, 8-inch	...	1	1	1	...	...	...	...	...	...	...	1	1	1	1	For general use.
Hammers, claw — 28-oz.	...	1	1	1	1	...	...	1	1	...	...	...	...	...	...	For general use.
Hammers, claw — 20-oz.	...	...	...	...	...	...	...	...	...	1	1	...	...	...	...	For general use.
Hammers, claw — 14-oz.	...	...	...	...	1	1	...	...	...	...	...	...	...	...	...	For general use.
Handles, file, small	...	1	1	1	...	...	...	...	...	...	...	1	1	1	1	
Hooks, bill	...	1	1	1	1	1	1	1	1	1	1	1	1	1	1	
Knives, clasp	...	1	1	1	1	1	1	1	1	1	1	1	1	1	1	
Levels, F.S., 4 feet, Mark II.	...	*b*	*b*	*b*	...	...	*b*	*b*	...	...	...	*b*	*b*	*b*	*b*	
Lines, carpenters	...	1	1	1	...	...	...	1	1	...	...	...	1	1	1	1	

Digitized by Google

Pincers, carpenters ... ... pairs	1	1	1	1	1	1	1	1	1	1	1	1	1	1	1	
Punches, R.B.L. guns, steel { 7 inches ...	...	...	1	...	...	...	...	...	...	...	...	...	...	...	...	For removing keep-pins, &c.
{ 6 ,, ...	...	...	...	...	1	1	...	...	...	...	...	...	...	...	...	
Rammers, earth	...	...	2	...	...	...	2	2	...	...	...	...	...	...	...	For use in laying Clerk's platforms.
Reels, carpenters line	1	1	1	...	...	...	1	1	...	...	...	1	1	1	1	
Shovels, universal	1	1	1	1	1	1	1	1	1	1	1	1	1	1	1	
Spades, N.P.	1	1	1	1	1	1	1	1	1	1	1	1	1	1	1	
Spanners, McMahon, 15-inch	1	1	1	1	1	1	1	1	1	1	1	1	1	1	1	For tightening nuts, &c.
TOOLS, ORDNANCE.																
Tools, cleaning, examining, painting, and lacquering rifled ordnance... sets	*g*	*g*	*g*	*g*	*g*	*g*	*g*	*g*	*g*	*g*	*g*	*g*	*g*	*g*	*g*	According to the nature of ordnance in the district. For detail *see* pages 616 to 619, Table A.
Vocabulary Section IV.																
Blocks, wood, snatch, 10-inch	...	...	*b*	...	...	...	...	...	...	...	...	*b*	*b*	*b*	*b*	
Brushes, water, carriage	2	2	2	2	2	2	2	2	2	2	2	2	2	2	2	1 for cleaning the sponge, and 1 for cleaning projectiles.
Chalk, white ... ... oz.	4	4	4	...	...	...	4	4	...	...	...	4	4	4	4	
Cordage { hawser, 3-strand, tarred, 1½-inch ... ... fms.	12	12	12	...	...	...	12	12	...	...	...	12	12	12	12	For lashing skids, &c.
{ tarred, spun yarn, hemp, 2 thread ... ... lbs.	2	2	2	...	...	...	2	2	...	...	...	2	2	2	2	General purposes.
Flags, signal, Army... ... { blue, 3 feet square ...	...	...	...	...	...	...	...	...	...	...	...	...	...	...	...	2 per group of guns.
{ white with stripe, 3 feet square	...	...	...	...	...	...	...	...	...	...	...	...	...	...	...	2 per group of guns.
{ Poles	...	...	...	...	...	...	...	...	...	...	...	...	...	...	...	4 per group of guns.
Lanterns, bull's-eye	*a*	*a*	*a*	*a*	*a*	*a*	*a*	*a*	*a*	*a*	*a*	*a*	*a*	*a*	*a*	
Lines, Hambro'	1	1	1	1	1	1	1	1	1	1	1	1	1	1	1	
Locks, pad, iron, small	...	...	...	...	1	...	...	...	...	...	...	...	...	...	...	For axletree box.
Marline ... ... lbs.	1	1	1	1	1	1	1	1	1	1	1	1	1	1	1	

a. 1 per 2 pieces or less number.
b. 1 ,, 3 do. do.
c. 1 ,, 4 do. do.
d. 1 per 6 pieces or less number.
g. 1 ,, district if necessary.
i. 1 ,, work or battery.

Digitized by Google

Equipment of Guns and Howitzers for Movable Armaments—*continued.*

TABLE 21—*continued.*

	Proportions (per piece).														Remarks.
	B.L. Guns.		R.B.L. Guns.				R.M.L. Guns.					R.M.L. Howitzers.			
												8-inch.			
	5-inch.	4-inch.	40-pr.	20-pr.	12-pr.	9-pr.	40-pr.	25-pr.	16-pr.	13-pr.	9-pr.	70-cwt.	46-cwt.	6·6-inch.	6·3-inch.	
Oil, mineral ... ...galls.	...	...	...	...	...	...	...	...	...	...	...	...	...	...	...	Sufficient to fill hydraulic buffer.
Silk, twist ... ... oz.	...	...	...	...	...	...	...	...	...	...	...	1	1	1	1	
Tarpaulins, 20 feet × 10 feet	...	...	...	...	...	...	...	...	...	...	...	...	...	...	...	2 per group of guns.
Twine, packing, small ... ... lbs.	1	1	1	1	1	1	1	1	1	1	1	1	1	1	1	
Wick { common ... ...yards	...	...	...	...	...	...	...	...	...	...	...	...	...	...	...	4 per group of guns.
Wick { round, 1½-inch ... ... ,,	...	...	...	...	...	...	...	...	...	...	...	...	...	...	...	10 per group of guns.
MISCELLANEOUS.																
Handbooks { for ordnance	1	1	1	1	1	1	1	1	1	1	1	1	1	1	1	
Handbooks { for range-finder	*d*	*d*	*d*	*d*	*d*	*d*	*d*	*d*	*d*	*d*	*d*	*d*	*d*	*d*	*d*	
Vocabulary Section V. (1).																
Arms, radial, pivot, double-decked platforms	1	1	...	...	...	...	...	...	...	...	...	...	...	...	...	
Bags, extractor, projectile, 9-inch ...	...	...	...	...	...	...	...	...	...	...	...	*b*	*b*	*b*	*b*	To cover the head.
Bearers, shot, { 8-inch howitzer ...	...	...	...	...	...	...	...	...	...	...	...	1	1	...	...	For carrying projectiles.
R.M.L. { 6·6-inch ,, ...	...	...	...	...	...	...	...	...	...	...	...	...	...	1	...	
Bits, vent, 20-inch	1	1	...	...	...	...	...	...	...	...	...	...	...	...	...	
Boxes { grease, 3-lb.	*b*	*b*	*b*	*b*	*b*	*b*	*b*	*b*	*b*	*b*	*b*	*b*	*b*	*b*	*b*	
Boxes { lantern, bull's-eye	1	1	...	...	...	...	1	1	...	...	...	1	1	1	1	
Boxes { limber, siege	1	1	...	...	...	...	...	...	...	...	...	1	1	1	1	Per limber.
Boxes { obturating pads { 5-inch ...	1	...	...	...	...	...	...	...	...	...	...	...	...	...	...	
Boxes { obturating pads { 4 ,, ...	...	1	...	...	...	...	...	...	...	...	...	...	...	...	...	

Digitized by Google

| | | |

Equipment of Guns and Howitzers for Movable Armaments—*continued.*

TABLE 21—*continued.*

	Proportions (per piece).														Remarks.
	B.L. Guns.		R.B.L. Guns.				R.M.L. Guns.					R.M.L. Howitzers.			
												8-inch.			
	5-inch.	4-inch.	40-pr.	20-pr.	12-pr.	9-pr.	40-pr.	25-pr.	16-pr.	13-pr.	9-pr.	70-cwt.	46-cwt.	6·6-inch.	6·3-inch.	
Clamps, tangent sight { automatic A	1	1	...	...	...	...	...	...	...	...	...	...	...	...	...	
B	...	...	...	...	...	...	...	...	...	...	...	2	1	2	1	
D	...	...	...	...	...	...	2	2	...	...	...	...	...	...	...	
E	...	...	...	...	...	...	...	...	...	...	...	...	1*	...	1*	
Clinometers, Watkin	1	1	1	1	1	1	1	1	1	1	1	1	1	1	1	For measuring angles of slopes.
Clippers, portfire	...	...	...	...	...	...	*i*	*i*	*i*	*i*	*i*	*i*	*i*	*i*	*i*	To cut lighted portfires.
Coatings, sponge, R.B.L....	...	...	†	†	...	...	...	...	...	...	...	...	...	...	...	Spare for sponge head.
Coins, hand { No. 4	...	...	...	...	...	...	1	1	...	...	...	...	...	...	...	
„ 7	...	...	...	...	...	...	1	1	...	...	...	...	...	...	...	
Covers { breech	1	1	...	...	...	...	...	...	...	...	...	...	...	...	...	
vent, R.B.L.	...	...	1	1	1	1	...	...	...	...	...	...	...	...	...	To protect vent slots and sights.
Cups, R.B.L. guns { 40-pr.	...	...	‡	...	...	...	...	...	...	...	...	...	...	...	...	
40-pr., side closing ...	...	...	*k*	...	...	...	...	...	...	...	...	...	...	...	...	
20-pr.	...	...	...	‡	...	...	...	...	...	...	...	...	...	...	...	
12-pr.	...	...	...	...	‡	‡	...	...	...	...	...	...	...	...	...	
Extractors { projectile, R.M.L. ...	...	...	...	...	...	...	...	...	...	...	...	*b*	*b*	*b*	*b*	
tin cup { crosshead ...	...	...	1 *l*	...	...	...	...	...	...	...	...	...	...	...	...	
hook ...	...	...	1§	1§	1§	1§	...	...	...	...	...	...	...	...	...	
tube { P. ...	1	1	...	...	...	...	...	...	...	...	...	...	...	...	...	
P. special	*a*	*a*	...	...	...	...	...	...	...	...	...	...	...	...	...	
Gyns, triangle, with appurtenances, light, tubular	...	...	...	...	...	...	...	...	...	...	...	...	...	...	...	1 per group of guns and howitzers, except field guns.
Handspikes, common { 7-ft.	...	...	...	...	...	...	...	...	...	...	...	5	5	...	...	
6 „	5	5	5	...	...	...	5	5	...	...	...	...	...	5	5	

Digitized by Google

Handspikes, traversing, field	R.B.L.	...	...	...	1	1	1	...	...	...	...	...	...	...	...	...	...	
	R.M.L.	...	...	...	...	...	...	...	...	...	1	1	1	...	...	...	...	
Horns, powder¶		...	...	...	...	...	...	...	...	...	...	...	...	*i*	*i*	*i*	*i*	For priming guns if required.
Jacks, lifting, screw, Clerk's ...		...	*a*	*a*	*a*	*a*	...	...	*a*	*a*	...	...	...	*a*	*a*	*a*	*a*	For general use.
Keys, tampeon, B.L., small ...		...	*a*	*a*	...	...	...	...	...	...	...	...	...	...	...	...	...	
Lanyards, friction tube	field	...	...	...	...	3	3	...	...	3	3	3	...	...	...	...	...	
	siege No. 1	...	...	...	3	3	...	...	3	3	...	...	...	3	3	3	3	
	siege ,, 2	...	3	3	...	...	...	...	...	...	...	...	...	...	...	...	...	
Levers { iron shod, crow, 7-ft. ...		...	*i*	*i*	*i*	...	...	...	*i*	*i*	...	...	...	*i*	*i*	*i*	*i*	For drawing bolts, &c.
12-ft.		...	...	...	...	...	...	...	...	...	...	...	...	*a*	*a*	*a*	*a*	
8 ,, ...		...	...	...	*a*	*a*	...	...	...	...	...	...	...	...	...	...	...	
Limbers { field	R.B.L.	...	...	...	...	1	1	1	...	...	...	...	...	...	...	...	...	
	R.M.L.	...	...	...	...	...	...	...	...	1	1	1	1	...	...	...	...	
siege	B.L.	...	1	1	...	...	...	...	...	...	...	...	...	...	...	...	...	1 per two guns.
	R.B.L.	...	...	...	1	...	...	...	...	...	...	...	...	...	...	...	...	
	R.M.L.	...	...	...	...	...	...	...	1	...	...	...	...	1	1	1	1	
Linstocks		...	*i*	*i*	*i*	*i*	*i*	*i*	*i*	*i*	*i*	*i*	*i*	*i*	*i*	*i*	*i*	To hold lighted slow match.
Loops, breech, top carriage, R.M.L.		...	...	...	...	...	...	...	1	1	...	...	...	...	...	...	...	
Manls, sabicu		...	1	1	1	...	...	...	1	1	...	...	...	1	1	1	1	
Measures, hydraulic buffer, filling		...	*i*	*i*	...	...	...	...	...	...	...	...	...	*i*	*i*	*i*	*i*	For filling the hydraulic buffer.
Ordnance { B.L.		...	1	1	...	...	...	...	...	...	...	...	...	...	...	...	...	
Special Implements.																		
Wrenches, breech action		1	1	...	...	...	...	...	...	...	...	...	...	...	...	...	...	
R.B.L.		...	...	1	1	1	1	...	...	...	...	...	...	...	...	...	...	
Fittings.																		
Bolts, eye, elevating		...	...	...	1	1	1	...	...	...	...	...	...	...	...	...	...	
R.M.L.		...	...	...	...	...	...	1	1	1	1	1	1	1	1	1	1	
Fittings.																		
Bolts, cascable, elevating		...	...	...	...	...	...	...	...	1	1	1	...	...	...	...	...	

a. 1 per 2 pieces or less number.
b. 1 ,, 3 do. do.
i. 1 ,, work or battery.
k. 1 ,, round.
l. Side closing guns only.

* If centre sighted.
† 1 per 100 rounds of ammunition.
‡ With practice ammunition only.
§ For practice guns only.
¶ Contains 1½ lb. gunpowder.

Digitized by Google

Equipment of Guns and Howitzers for Movable Armaments—*continued.*

TABLE 21—*continued.*

	Proportions (per piece).														Remarks.
	B.L. Guns.		R.B.L. Guns.				R.M.L. Guns.					R.M.L. Howitzers.			
												8-inch.			
	5-inch.	4-inch.	40-pr.	20-pr.	12-pr.	9-pr.	40-pr.	25-pr.	16-pr.	13-pr.	9-pr.	70-cwt.	46-cwt.	6·6-inch.	6·3-inch.	
Pins, linch { 1st Class, steel	1	1	1	...	...	...	1	...	...	...	...	1	1	1	1	Spare.
2nd „ „	1	1	1	1	1	1	1	2	1	1	1	1	1	1	1	Spare.
Planks { moving guns { half { 6 ft. × 12 ins. ...	...	...	2	...	...	...	2	2	...	...	...	...	...	...	...	For Clerk's platforms.
half { 6 „ × 12 „ ...	1	1	1	...	...	...	1	1	...	...	...	1	1	1	1	} For moving and mounting guns.
half { 4 „ × 12 „ ...	1	1	1	...	...	...	1	1	...	...	...	1	1	1	1	
whole, 10 „ × 17 „ fir	2	2	2	...	...	...	2	2	...	...	...	2	2	2	2	
trail, siege, Mark II.	1	1	...	...	...	...	...	...	...	...	...	1	1	1	1	
Plates { pivot, double decked platform	1	1	...	...	...	...	...	...	...	...	...	1	1	1	1	With under plates and bolts.
wheel, platform, siege ...	2	2	...	...	...	...	...	...	...	...	...	2	2	2	2	
Platforms, { Clerk's	...	...	1	...	...	...	1	1	...	...	...	...	...	...	...	
siege { double decked "C" pivot	1	1	...	...	...	...	...	...	...	...	...	1	1	1	1	**
Plugs { pivot, No. 17	...	...	...	...	...	...	...	...	...	...	...	1	1	1	1	
vent	...	...	...	...	...	...	...	...	...	...	...	1	1	1	1	To protect the vent at home stations and in cold climates.
Plummets, howitzer	1	1	1	...	...	...	1	1	...	...	...	1	1	1	1	For laying.
Rockets { fuze and hook borer... ...	1	1	1	1	1	1	1	1	1	1	1	...	...	...	...	
tin cup	...	...	1	1	1	1	...	...	...	...	...	...	...	...	...	
tube { land service... ...	...	...	1	1	1	1	1	1	1	1	1	1	1	1	1	
tube { vent sealing... ...	1	1	...	...	...	...	...	...	...	...	...	...	...	...	...	For percussion vent sealing tubes.
Posts { picket, 5 feet	2	2	2	...	...	...	2	2	...	...	...	2	2	2	2	
„ 2 „ 6-inches ...	...	...	2	...	...	...	2	2	...	...	...	...	...	...	...	For Clerk's platforms.
Prickers { 12-inch	...	...	1*a*	...	...	...	1	1	...	...	...	1	1	1	1	} To clear the vent.
7½ „	...	...	...	...	...	...	...	...	1	1	1	...	...	...	...	
Punches, vent { 12-inch	...	...	...	...	...	...	...	...	...	...	...	...	1	...	...	
8 „	...	...	1*a*	...	...	...	1	1	1	1	1	1	...	1	1	
Rammers { B.L.	1	1	...	...	...	...	...	...	...	...	...	...	...	...	...	
R.B.L.	...	...	1	1	1	1	...	...	...	...	...	...	...	...	...	
R.M.L.	...	...	...	...	...	...	1†	1†	*	*	*	1	1	1	*	

Digitized by Google

Range-finders, field, Watkin, large			...	...	...	...	...	...	...	...	...	...	...	...	...	...	...	...	1 per group of guns.
Rimers, vent, axial			1	1	...	...	...	...	...	...	...	...	...	...	...	...	...	...	
Rods, vent, 20-inch			1	1	...	...	...	...	...	...	...	...	...	...	...	...	...	...	
Rollers	ground	3 ft. × 6 ins. diameter	1	1	1	...	...	...	1	1	...	...	...	1	1	1	1		For mounting and dismounting, &c.
		2½ ,, × 5 ,, ,,	...	...	...	...	...	...	...	...	...	...	...	2	2	2	...		
		Sabieu 20 ins. × 5 ,, diameter	...	...	...	...	...	...	...	...	...	...	...	2	2	...	...		For shifting to platform wagon.
		14 ,, × 5 ,, ,,	...	...	...	...	...	...	...	...	...	...	...	...	...	1	...		
	shifting	No. 3	...	...	...	...	...	...	...	...	...	...	...	1	...	...	...		
		,, 4	...	...	...	...	...	...	...	...	...	...	...	...	...	1	1		
		,, 5	...	...	...	...	...	...	1	...	...	...	...	...	...	...	...		
		,, 6	...	...	...	...	...	...	...	1	...	...	...	...	...	...	...		
Ropes ...	drag	heavy ... ... pairs	1	1	1	1	...	...	1	1	...	...	...	1	1	1	1		
		light ... ... ,,	...	...	...	...	1	1	...	...	1	1	1	...	...	...	...		
	parbuckling, 12 fathoms		...	...	*b*	...	...	...	...	...	...	...	...	*b*	*b*	*b*	*b*		
Scotches	large		4	4	4	...	...	...	4	4	...	...	...	4	4	4	4		For general purposes.
	medium		4	4	4	...	...	...	4	4	...	...	...	4	4	4	4		
	small		4	4	4	...	...	...	4	4	...	...	...	8	8	8	4		
Selvagees, ordinary			1	1	1	...	...	...	1	1	...	...	...	1	1	1	1		
Shoes, drag, No. 1			1	1	1	...	...	...	1	...	...	...	...	1*	1*	1	1		*2 per carriage for China, Malta, and Gibraltar.
Shot ...	B L., case		10	10	...	...	...	...	...	...	...	...	...	...	...	...	...		
	R.B.L., case		...	...	10	10	4	4	...	...	...	...	...	...	...	...	...		
	R.M.L., ,, ...		...	...	...	...	...	...	10	10	4	4	4	10	10	10	10		
Sights	B.L. ...	fore E	1	1	...	...	...	...	...	...	...	...	...	...	...	...	...		
		tangent	1	1	...	...	...	...	...	...	...	...	...	...	...	...	...		
		telescopic	1	1	...	...	...	...	...	...	...	...	...	...	...	...	...		
	R.B.L.	fore	...	...	2	2	2	2	...	...	...	...	...	...	...	...	...		
		tangent	...	...	2	2	2	2	...	...	...	...	...	...	...	...	...		
	R.M.L.	crossbar, fore ...	...	...	...	...	...	...	1	1	...	...	...	2	2	2	2		
		crossbar, tangent ...	...	...	...	...	...	...	1	1	...	...	...	2	2	2	2		
		fore ... B	...	...	...	...	...	...	1	1	...	...	...	...	...	...	...		
		fore ... 16-pr. ...	...	...	...	...	...	...	...	...	2	...	...	...	...	...	...		
		fore ... muzzle ...	...	...	...	...	...	...	...	...	...	1	1	...	...	...	...		
		tangent	...	...	...	...	...	...	1	1	2	2†	2‡	...	...	...	...		
Skids	3 ft. × 9 ins. × 6 ins.		...	...	...	...	...	...	...	...	...	...	...	...	...	...	...	6	
	3 ,, × 6 ,, × 5 ,, ...		...	...	...	...	...	...	...	...	...	...	...	...	...	...	...	6	
	3 ,, × 6 ,, × 3 ,, ...		...	...	...	...	...	...	...	...	...	...	...	...	...	...	...	6	per group of guns. For mounting and dismounting, &c.
	3 ,, × 5 ,, × 4 ,, ...		...	...	1§	...	...	...	1§	1§	...	...	...	...	...	...	...	6	
	dismounting	14 ft. × 8 ins. sq. prs.	...	...	...	...	...	...	...	...	...	...	...	...	...	...	...	2	
		14 ,, × 5½ ,, ,, ,,	...	...	...	...	...	...	...	...	...	...	...	...	...	...	...	2	

** To be kept in Ordnance Store charge, and demanded and laid by R.E. as required. Should accommodation exist in the works in which they would have to be laid, arrangements should be made to have them stored there, and taken charge of for Ordnance Store Department by the Master Gunner.

a. Side closing guns only.

b. 1 per 3 pieces or less number.

* Rammers are on the sponge stave, and are fitted with worms.

† Jointed if with top carriage.

‡ 1 long and 1 short.

Digitized by Google

Equipment of Guns and Howitzers for Movable Armaments—*continued.*

TABLE 21—*continued.*

	Proportions (per piece).														Remarks.
	B.L. Guns.		R.B.L. Guns.				R.M.L. Guns.					R.M.L. Howitzers.			
												8-inch.			
	5-inch.	4-inch.	40-pr.	20-pr.	12-pr.	9-pr.	40-pr.	25-pr.	16-pr.	13-pr.	9-pr.	70-cwt.	46-cwt.	6·6-inch.	6·3-inch.	
Spanners, hydraulic buffer... No. 1	*d*	*d*	...	...	...	...	...	...	...	...	...	*d*	*d*	*d*	*d*	To tighten glands and caps of buffers.
,, 6	*b*	*b*	...	...	...	...	...	...	...	...	...	*b*	*b*	*b*	*b*	To remove screw plug.
Spikes, gun common	2	2	2 *l*	...	...	...	2	2	2	2	2	2	2	2	2	
spring C	...	...	...	...	...	...	...	...	...	...	...	1	1	...	...	
spring D	...	...	...	...	...	...	1	1	1	...	...	...	...	1	1	
spring E	...	...	...	...	...	...	...	...	...	1	1	...	...	...	...	
Sponges B.L. 5-inch bore	1	...	...	...	...	...	...	...	...	...	...	...	...	...	...	
B.L. 4-inch 22-cwt. bore	...	1	...	...	...	...	...	...	...	...	...	...	...	...	...	
R.B.L.	...	...	1	1	1	1	...	...	...	...	...	...	...	...	...	
R.M.L.	...	...	...	...	...	...	1*	1*	1	1	1	1	1	1	1	
Staves, end, B.L.	1	1	...	...	...	...	...	...	...	...	...	...	...	...	...	
Sticks, portfire	...	...	...	...	...	...	*i*	*i*	*i*	*i*	*i*	*i*	*i*	*i*	*i*	To hold lighted portfire.
Straps lifting projectile R.B.L. 40-pr.	...	...	10	...	...	...	12	...	...	...	...	...	...	...	...	
lifting projectile R.M.L., 25-pr.	...	...	...	...	...	...	...	18	...	...	...	...	...	...	...	
tube box, long	1	1	1	1	1	1	1	1	1	1	1	1	1	1	1	
Swingletrees No 1	3	3	3	...	...	...	1	...	...	...	...	3	3	3	3	
,, 2	...	...	...	1	1	1	...	1	1	1	1	...	...	...	...	
Tackles, luff, 14 fathoms	2	2	2	...	...	...	2	2	...	...	...	2	2	2	2	For shifting the gun, &c.
Tampeons B.L.	1	1	...	...	...	...	...	...	...	...	...	...	...	...	...	
R.B.L. breech	...	...	1	1	...	...	...	...	...	...	...	...	...	...	...	
R.B.L. muzzle	...	...	1	1	1	1	...	...	...	...	...	...	...	...	...	
R.M.L.	...	...	...	...	...	...	1	1	1	1	1	1	1	1	1	
Ties, linch pin	20	20	20	20	20	20	20	20	20	20	20	20	20	20	20	
Vent servers†	...	...	2 *l*	...	...	...	2	2	...	...	...	2	2	2	2	To place in the vent while loading.
Wadhooks, R.M.L. 40-pr.	...	...	...	...	...	...	*m*	...	...	...	...	...	...	...	...	For drawing the charge and searching the bore.
8-inch, 70 cwt., howitzer	...	...	...	...	...	...	...	...	...	...	...	*m*	...	...	...	
8-inch, 46 cwt., ,,	...	...	...	...	...	...	...	...	...	...	...	...	*m*	*m*	*m*	

Digitized by Google

Wagons	ammunition and store, R.A.†	*h*	...	...	...	...	...	...	...	...	...	...	...	...	...	...	...	1 per group of howitzers.
	platform, gun, R.M.L., 6·6-inch	...	1	1	...	...	...	1	...	...	...	...	1	1	1	1	1	Spare.
Washers	drag { 1st Class B	...	1	1	...	1	1	...	1	1	1	...	1	1	...	...	...	Do.
	{ 2nd Class B	...	1	1	...	...	...	1	...	...	...	...	...	...	1	1	1	Do.
	loop, 2nd Class B	...	...	...	...	...	...	...	*m*	*m*	*m*	*m*	...	...	...	...	...	For drawing the charge and searching the bore.
Worms, wadhook, No. 5		...	...	...	...	...	...	*a*	*a*	...	...	...	*a*	*a*	*a*	*a*	*a*	
Wrenches	pivot { No. 4	...	...	...	...	...	...	...	...	...	...	...	...	...	...	...	...	
	{ No. 5	*a*	*a*	...	...	...	...	...	...	...	...	...	...	...	...	...	...	
	sight, R.M.L. { muzzle	...	...	...	...	...	...	...	...	...	...	1	1	...	...	...	...	
	{ 16-pr.	...	...	...	...	...	...	...	1	...	...	...	...	...	...	...	...	

Vocabulary Section V. (2).

Bags, burster, common	B.L. { 5-inch	...																
	{ 4 ,,	...																
	R.B.L. 40-pr.	...																
	R.M.L. { gun { 40-pr.	...																
	{ 25 ,,	...																
	{ 16 ,,	...																
	{ howitzer { 8-in.	...																
	{ 6·6 ,,	...																
	{ 6·3 ,,	...																
Bags, powder, 15 lb.		...	...	...	...	...	...	...	...	...	...	...	1	1	1	1	1	
Cartridges	B.L., 5-inch, 7¾ lb. S.P.	...																
	filled 4 ,, 12	...																
	R.B.L., filled, 40-pr., 5 lb. R.L.G.[2]																	
	{ 20 ,, 2½ ,,																	
	silk cloth { 12 ,, 1½ ,,																	
	{ 9 ,, 1⅛ ,,																	

2 per round of ammunition.

1 per round of ammunition.

1 per empty common shell.

a. 1 per 2 pieces or less number.
b. 1 ,, 3 pieces or less number.
d. 1 ,, 6 pieces or less number.
h. 1 ,, piece for extended positions over 400 yards.
i. 1 ,, work or battery.
l. Side closing guns only.
m. 1 per 3 pieces or less number. If more are required for drill they must be collected from other pieces.

* Wire rope stave if used with top carriage.
† Whipcord should be demanded separately for making the lanyards.
‡ Where these are not available, other means of transport will be adopted.
§ For Clerk's platforms.

Digitized by Google

Equipment of Guns and Howitzers for Movable Armaments—*continued.*

TABLE 21—*continued.*

		Proportions (per piece).														Remarks.
		B.L. Guns.	R.B.L. Guns.				R.M.L. Guns.					R.M.L. Howitzers.				
		5-inch.	4-inch.	40-pr.	20-pr.	12-pr.	9-pr.	40-pr.	25-pr.	16-pr.	13-pr.	9-pr.	8-inch. 70-cwt.	8-inch. 46-cwt.	6·6-inch.	6·3-inch.	
Cartridges	R.M.L., filled, silk cloth	8-inch 11½ lb. R.L.G.[2]															An equal number of each charge per howitzer will be maintained.
		8-inch 10 " "															
		8-inch 7 " "															
		8-inch 5 " "															
		8-inch 3½ " "															
		8-inch 2½ " "															
		6·6-inch 5 " "															
		6·6-inch 3 " "															
		6·6-inch 2 " "															
		6·3-inch 4 " "															
		6·3-inch 2 " "															
		40-pr., 6¼ lb. R.L.G.[2]															
		25 " 4½ " "															
		16 " 3 " " 3 oz. R.L.G.[4]															
		13 " 3¼ " R.L.G.[4]															
		9 " 1¼ " R.L.G.[2]															
Cases, powder, metal lined, Keys																	As required.
Covers, cartridge, paper, R.M.L.																	
Fuzes	percussion	breechloading, plain, No. 2	45		45	50	50										5
		direct action, No. 3															5
		R.L., No. 7			45				45	45	24	24					5
		small, No. 8	45														1
	time	Armstrong, E, No. 22			45												1
		sensitive long, No. 23															1
		sensitive middle, No. 24															1
		15 seconds, M.L., No. 41															5
		15 seconds, with special priming, No. 24															

1 per round of ammunition.

Digitized by Google

*Fuzes, time	tor, No. 43																
	and percussion: middle, No. 54	45	...	...	...	...	...	...	...	...	...	...	...	...	...	1	in a tin cylinder.
	and percussion: short, No. 55	...	45	...	...	...	...	...	...	...	...	...	...	...	...	1	
Gas-checks, R.M.L.		...	...	...	...	...	...	†	...	...	...	...	†	†	†	†	
Implements, fuze and shell: Bits, hook borer, Mark III.		...	...	6	...	6	6	6	6	6	6	6	6	6	6	6	
Cylinders, common		...	...	1	...	1	1	1	1	1	1	1	1	1	1	1	
Drifts, G.S.		...	...	...	*a*	*a*	*a*	...	...	...	*a*	*a*	...	...	...	...	
Drivers, screw, Shrapnel, large		*a*	...	...	...	...	...	*a*	*a*	*a*	*a*	*a*	*a*	*a*	*a*	*a*	
Extractors, fuze, small, rifled		...	...	*a*	...	*a*	*a*	*a*	*a*	*a*	*a*	*a*	*a*	*a*	*a*	*a*	
Handles, hook borer		...	...	1	...	1	1	1	1	1	1	1	1	1	1	1	
Hooks: G.S. wad		...	...	...	*a*	*a*	*a*	...	...	..	*a*	*a*	...	...	...	...	
Hooks: hook-borer		...	...	1	...	1	1	1	1	1	1	1	1	1	1	1	
Keys: fuze and plug, G.S.‡		...	...	1	1	1	1	1	1	1	1	1	...	...	...	...	
Keys: fuze, universal		...	2	1	...	...	...	...	...	...	...	...	2	2	2	2	The second key required when the Mark III Direct Action fuzes are used.
Pincers, Shrapnel primer		...	*a*	...	...	...	...	...	*a*	*a*	*a*	*a*	*a*	*a*	*a*	*a*	
Rectifiers, gas-check, R.M.L., 13-pr.		...	...	...	...	...	...	...	...	...	...	*a*	...	...	...	...	
Spanners, gas-check plug		...	...	...	...	...	...	1	...	...	...	...	...	1	...	1	
Wrenches, base plug		...	...	...	...	...	...	1	...	...	...	...	1	1	1	1	
Match: quick	lbs.	...	...	...	...	...	...	...	...	...	...	...	½	½	½	½	For general use.
Match: slow	,,	...	...	...	...	...	...	...	...	...	...	...	...	...	...	...	1 per 100 rounds. For lighting portfires, &c.
Plugs, wood, covered with serge		...	...	...	45	46	46	...	...	...	...	...	...	...	...	...	1 per segment shell.
Portfires, common		...	...	...	...	...	...	...	...	...	...	...	...	...	...	...	2 per 100 rounds, for R.M.L. guns and howitzers only.
Primers: Shrapnel shell		...	...	...	...	...	...	...	...	...	...	...	...	...	...	...	1 per empty shrapnel shell.
Primers: vent piece		...	...	*d*	...	...	...	...	...	...	...	...	...	...	...	...	
Rockets: signal, 1 lb., service		...	...	...	...	...	...	...	...	...	...	...	...	...	...	...	20 per group of guns.
Rockets: sticks, 8 ft. 2 in.		...	...	...	...	...	...	...	...	...	...	...	...	...	...	...	1 per signal rocket.
Scales, weighing, powder, 8 lb.		...	...	...	...	...	...	...	...	...	...	...	*b*	*b*	*b*	*b*	

a. 1 per 2 pieces or less number.
b. 1 ,, 3 pieces or less number.
d. 1 ,, round.
k. 1 ,, round.

* The designation number is shown on the label of the cylinder or other package in which the fuze is packed. The number stamped on the fuze itself denotes the number of the thousand manufactured.
† 1 per shell, except star shell. For fixing on the base of projectile.
‡ Will be replaced by the "Key, fuze, universal," as the present store becomes used up.

Digitized by Google

Equipment of Guns and Howitzers for Movable Armaments—*continued.*

TABLE 21—*continued.*

		Proportions (per piece).													Remarks.
		B.L. Guns.		R.B.L. Guns.				R.M.L. Guns.					R.M.L. Howitzers.				
													8-inch.				
		5-inch.	4-inch.	40-pr.	20-pr.	12-pr.	9-pr.	40-pr.	25-pr.	16-pr.	13-pr.	9-pr.	70-cwt.	46-cwt.	6·6-inch.	6·3-inch.	
Shells*	B.L., filled common	45	45	...	...	...	...	...	...	...	...	...	...	...	...	...	Per 100 rounds.
	B.L., filled Shrapnel	45	45	...	...	...	...	...	...	...	...	...	...	...	...	...	
	R.B.L., filled common	...	...	45	45	50	50	...	...	...	...	...	...	...	...	...	
	R.B.L., filled segment	...	...	45	45	46	46	...	...	...	...	...	...	...	...	...	
	R.M.L., filled common	...	...	...	...	...	...	45	45	24	24	24	40	40	40	80	
	R.M.L., filled Shrapnel	...	...	...	...	...	...	45	45	72	72	72	40	40	40	...	
	R.M.L., filled star	...	...	...	...	...	...	...	...	...	...	...	10	10	10	10	
Tubes	friction, copper, solid drawn	...	...	*k*	*k*	*k*	*k*	*k*	*k*	*k*	*k*	*k*	*k*	*k*	*k*	*k*	
	vent sealing, percussion	*k*	*k*	...	...	...	...	...	...	...	...	...	...	...	...	...	
Wads, fuze hole, G.S.		...	...	...	...	...	...	...	...	...	...	...	...	...	...	...	1 per empty common shell, not taking bag.
Vocabulary Section VI.																	
Brooms, bass	heads	1	1	1	...	...	...	1	1	...	...	...	1	1	1	1	For sweeping platforms.
	handles	1	1	1	...	...	...	1	1	...	...	...	1	1	1	1	
Lanterns, bull's-eye		1	1	...	...	...	...	1	1	...	...	...	1	1	1	1	
Weights *b*	brass, 8 ounces	...	...	...	...	...	...	...	...	...	...	...	*b*	*b*	*b*	*b*	
	gunmetal 7 lbs.	...	...	...	...	...	...	...	...	...	...	...	*b*	*b*	*b*	*b*	
	gunmetal 4 ,,	...	...	...	...	...	...	...	...	...	...	...	*b*	*b*	*b*	*b*	
	gunmetal 2 ,,	...	...	...	...	...	...	...	...	...	...	...	*b*	*b*	*b*	*b*	
	gunmetal 1 ,,	...	...	...	...	...	...	...	...	...	...	...	*b*	*b*	*b*	*b*	
Vocabulary Section VII. (1).																	
Stands, telescope	2½-inch socket	...	...	...	...	...	...	...	...	...	...	...	...	...	...	...	1 per group of guns.
	signalling	...	...	...	...	...	...	...	...	...	...	...	...	...	...	...	
Tapes, measuring, 50 feet		...	...	...	...	...	...	...	...	...	...	...	...	...	...	...	
Telescopes	3 feet	...	...	...	...	...	...	...	...	...	...	...	...	...	...	...	
	signalling	...	...	...	...	...	...	...	...	...	...	...	...	...	...	...	

b. 1 per 3 pieces or less number.
k. 1 ,, round.

* All shells in R.A. charge will be kept filled as far as store accommodation will admit.

Digitized by Google

EQUIPMENT OF SIEGE TRAIN COMPANIES, 40-PR. AND 25-PR. R.M.L. GUNS, 8-INCH AND 6·6-INCH R.M.L. HOWITZERS.

TABLE 22.

	Gun.		Howitzer.		Carts, trench.	Wagons.				No. per Battery.
							Platform.			
	40-pr. R.M.L.	25-pr. R.M.L.	8-inch, 70 cwt.	6·6-inch.		Ammunition and store.	Gun.	Gyns.	Store, R.A., and limber.	
Vocabulary Section II. (1).										
Boxes, globular lanterns	...	...	...	...	...	...	...	...	1	1
Buckets, water, G.S., leather... ...	2	2	2	2	...	2	2	2	2	18
Colours, camp	3	3	3	3	...	...	...	...	...	12
Kettles, camp, oval, 12 quarts ...	2	2	2	2	...	2	2	2	2	18
Lamps, tracing	...	...	...	...	...	...	...	...	...	4
Lanterns, brass, globular	...	...	...	...	...	...	...	...	2	2
Stools, camp, folding	...	...	...	...	...	...	...	...	1	1
Vocabulary Section II. (2).										
Carts, trench	...	...	...	...	2	...	...	...	...	2
Jacks, lifting, G.S.	...	1	...	...	...	...	...	...	...	1
Vocabulary Section II. (3).										
HARNESS AND SADDLERY.										
Couples, trace	2	2	2	2	...	2	...	...	2	14
Vocabulary Section III.										
Chests, tool, filled { No. 11B	...	...	...	...	...	...	...	...	...	1
{ ,, 3E ...	...	...	...	...	...	...	...	...	...	1
Axes { felling, curved helve	1	1	1	1	...	1	...	...	1	7
{ Helves, 36 inches (spare) ...	...	...	...	...	...	...	...	...	...	2
{ pick { Heads, 6½ lbs.	1	1	1	1	...	1	...	...	1	7
{ pick { Helves, 34½ inches ...	...	...	...	...	...	...	...	...	...	14*
Bars, crow, 5 feet 6 inches	...	...	...	...	...	...	...	...	...	1
Cases, saw, hand	1	1	1	1	...	...	...	...	...	4
Drivers, screw, G.S., 6-inch	1	1	1	1	...	...	...	...	...	4
Files, second cut, half round, 8-inch...	1	1	1	1	...	...	...	...	...	4
Hammers, claw, 28-oz.	1	1	1	1	...	...	...	...	...	4
Handles, file, middling	1	1	1	1	...	...	...	...	...	4
Hooks, bill	1	1	1	1	...	1	...	...	1	7
Knives, clasp	1	1	1	1	...	...	...	...	...	4
Levels, F.S., 4 feet	...	...	...	...	...	...	...	...	...	2
Lines, carpenters	1	1	1	1	...	...	...	...	...	4
Pincers, carpenters ... ... pairs	1	1	1	1	...	...	...	...	...	4
Rammers, earth	...	...	...	...	...	...	...	...	...	10
Reels, carpenters line	1	1	1	1	...	...	...	...	...	4

* Also for mauls.

Digitized by Google

Equipment of Siege Train Companies, 40-pr. and 25-pr. R.M.L. Guns, 8-inch and 6·6-inch R.M.L. Howitzers—*continued.*

TABLE 22—*continued.*

	Guns.		Howitzer.			Wagons.				
	40-pr. R.M.L.	25-pr. R.M.L.	8-inch, 70 cwt.	6·6-inch.	Carts, trench.	Ammunition and store.	Platform. Gun.	Platform. Gyns.	R.A., Store, and limber.	No. per Battery.
Saws, cross cut, Blades, 6 feet 6 inches	...	...	...	...	...	...	...	...	1	1
Saws, cross cut, Handles...	...	...	...	...	...	...	...	...	2	2
Saws, hand, 26-inch	1	1	1	1	...	...	...	...	...	4
Saws, pit, Blades, 6 feet	...	...	...	...	...	...	...	...	1	1
Saws, pit, Boxes	...	...	...	...	...	...	...	...	1	1
Saws, pit, Tillers	...	...	...	...	...	...	...	...	1	1
Saws, pit, Handles	...	...	...	...	...	...	...	...	1	1
Scissors, laboratory	1	1	1	1	...	...	...	...	...	4
Shovels, universal...	1	1	1	1	...	1	...	...	1	7
Spades, N.P.	1	1	1	1	...	1	...	...	1	7
Spanners, McMahon, 15-inch	1	1	1	1	...	...	...	...	...	4
Spikes, marline, iron, 11-inch	...	...	...	...	...	...	...	...	...	1
Vocabulary Section IV.										
Baskets, tin oil bottle, 5 gallons ...	...	...	...	...	...	...	...	...	...	2
Books, signalling, message forms ...	...	...	...	...	...	...	...	...	...	5
Bottles, tin, oil, 4 gallons	...	...	...	...	...	...	...	...	...	2
Brushes, water, carriage	2	2	2	2	...	1	1	1	1	13
Bungs, tin oil bottle, 5 gallons ...	...	...	...	...	...	...	...	...	...	4
Cans, oil, feeding, 1 pint	...	...	1	1	...	...	...	...	...	2
Cases, message book	...	...	...	...	...	...	...	...	...	2
Chalk, white ... ... ozs.	4	4	4	4	...	...	...	...	...	16
Cordage, hawser, 3-strand, tarred, 2½-inch fm.	...	...	...	...	...	...	...	...	...	56
Cordage, hawser, 3-strand, tarred, 1½-inch fm.	...	...	...	...	...	...	...	...	...	56
Cordage, spunyarn, hemp ... lbs.	2	2	2	2	...	...	...	...	...	8
Drums, oil, 3 gallons	...	...	...	...	...	...	...	...	...	2
Flags, signal, Army, blue, 3 feet square ...	...	...	...	...	...	...	...	...	...	6
Flags, signal, Army, white, with stripe, 3 feet square	...	...	...	...	...	...	...	...	...	6
Flags, signal, Army, Poles, 5 feet 6 inches...	...	...	...	...	...	...	...	...	...	12
Irons, branding, letters, 2 letter (R.A.) ...	...	...	...	...	...	...	...	...	...	1
Lines, Hambro'	...	...	1	1	...	...	...	...	...	2
Marline ... ... lbs.	...	...	3	3	...	...	...	...	...	6
Oil, colza† ... ... qrts.	4	4	4	4	...	...	...	...	...	16
Oil, mineral ... ... gals.	...	...	7	7	...	...	...	...	...	14
Rope, cotton, white, 2-inch, 3-strand, lbs.	...	...	4	4	...	...	...	...	...	8
Tarpaulins, 20 ft. × 10 ft.	...	...	...	...	...	...	...	...	...	2
Twine, whipping ... ... lbs.	1	1	1	1	...	...	...	...	...	4
Wax, bees ... ... ozs.	4	4	4	4	...	...	...	...	...	16
Wick†, common... ... ... lbs.	1	1	1	1	...	...	...	...	...	4
Wick†, flat, ⅝-inch ... ... yds.	...	...	...	...	...	...	...	...	4	4

† Supplied by Army Service Corps.

Digitized by Google

Equipment of Siege Train Companies, 40-pr. and 25-pr. R.M.L. Guns, 8-inch and 6·6-inch R.M.L. Howitzers—*continued.*

TABLE 22—*continued.*

	Gun.		Howitzer.			Wagons.				
	40-pr. R.M.L.	25-pr. R.M.L.	8-inch, 70 cwt.	6·6-inch.	Carts, trench.	Ammunition and store.	Platform. Gun.	Platform. Gyns.	Store, R.A., and limber.	No. per Battery.
Vocabulary Section V. (1).										
Arcs, elevating, carriage, R.M.L. — field, R.M.L., 25-pr.	...	1	...	...	...	...	...	...	...	1
siege, R.M.L. — 8-inch, 70 cwt., howitzer	...	...	1	...	...	...	...	...	...	1
siege, R.M.L. — 40-pr.	1	...	...	1	...	...	...	...	...	2
siege, R.M.L. — top 40 pr.	1	...	...	...	...	...	...	...	...	1
siege, R.M.L. — top 25-pr.	...	1	...	...	...	...	...	...	...	1
Bags, extractor, projectile, 9-inch	...	...	1	1	...	...	...	...	...	2
Bearers, shot, R.M.L. — 8-inch howitzer	...	...	1	...	...	...	...	...	...	1
Bearers, shot, R.M.L. — 6·6-inch ,,	...	...	...	1	...	...	...	...	...	1
Bits, vent, 17-inch	1	1	1	1	...	...	...	...	...	4
Blocks, brake, R.M.L., 8-inch, 70 cwt., howitzer (spare.)	...	...	2	...	...	...	...	...	...	2
Bolts, $\frac{3}{4}$-inch	8	5	...	...	...	...	...	...	...	13
Boxes — grease 14 lbs.	...	...	...	...	...	...	...	...	...	1
Boxes — grease 3 ,,	1	1	1	1	1	2	1	1	1	10
Boxes — lantern, bullseye, for laying back	1	1	1	1	...	...	...	...	...	4
Boxes — stationery, store wagon, R.A.	...	...	...	...	...	...	...	...	1	1
Brushes, piasaba, R.M.L. — 8-inch, 70 cwt., howitzer	...	...	1	...	...	...	...	...	...	1
Brushes, piasaba, R.M.L. — 6·6-inch howitzer	...	...	...	1	...	...	...	...	...	1
Brushes, piasaba, R.M.L. — 40-pr.	1	..	...	...	...	...	...	...	...	1
Brushes, piasaba, R.M.L. — 25-pr.	...	1	...	...	...	...	...	...	...	1
Cans, lubricating, No. 5	1	1	1	1	...	...	...	...	...	4
Caps, sponge* — No. 5	...	1	...	...	..	...	...	...	...	1
Caps, sponge* — ,, 7	1	...	...	...	...	...	...	...	...	1
Caps, sponge* — ,, 9	...	...	...	1	...	...	...	...	...	1
Caps, sponge* — ,, 10	...	...	1	...	...	...	...	...	...	1
Carriages, siege, R.M.L. — 8-inch, 70 cwt., howitzer	...	...	1	...	...	...	...	...	...	1
Carriages, siege, R.M.L. — 6·6-inch howitzer	...	...	...	1	...	...	...	...	...	1
Carriages, siege, R.M.L. — 40-pr. top, overbank	1	...	...	...	...	...	...	...	...	1
Carriages, siege, R.M.L. — Spanners lock nut	1	1	...	...	...	...	...	...	...	2
Carriages, siege, R.M.L. — Spanners small	1	1	...	...	...	...	...	...	...	2
Carriages, siege, R.M.L. — 25-pr. top, overbank	...	1	...	...	...	...	...	...	...	1
Cartouches, R.M.L. — 40-pr.	2	...	...	...	...	...	...	...	...	2
Cartouches, R.M.L. — 25-pr.	...	2	...	...	...	...	...	...	...	2
Cases — packing for top carriage	1	1	...	...	...	...	...	...	...	2
Cases — packing small, containing parts for siege carriage only.	1	1	...	...	...	...	...	...	...	2
Cases — cartridge No. 2	...	...	2	...	...	...	...	...	...	2
Cases — cartridge ,, 4	2	2	...	2	...	...	...	...	...	6
Clinometers, garrison	1	1	1	1	...	...	...	...	...	4
Cocks, hydraulic buffer, metal, siege R.M.L. howitzer.	...	...	...	...	...	...	...	...	...	1
Extractors, projectile, R.M.L. — 8-inch gun	...	...	1	...	..	...	...	...	...	1
Extractors, projectile, R.M.L. — 6·6-inch howitzer	...	...	...	1	.	...	...	...	...	1

* Only to be used for sponges in transit or where stores are damp, or when kept in the open.

Digitized by Google

Equipment of Siege Train Companies, 40-pr. and 25-pr. R.M.L. Guns, 8-inch and 6·6-inch R.M.L. Howitzers—*continued.*

TABLE 22—*continued.*

	Gun.		Howitzer.			Wagons.				
	40-pr. R.M.L.	25-pr. R.M.L.	8-inch, 70 cwt.	6·6-inch.	Carts, trench.	Ammunition and store.	Platform. Gun.	Platform. Gyns.	Store, R.A., and limber.	No. per Battery.
Gyns, triangle, light, tubular, with appurtenances.	...	...	...	...	...	...	...	1	...	
Handspikes common 7 ft.	...	...	8	...	...	...	...	...	...	8
Handspikes common 6 ft.	8	8	...	8	...	...	...	...	...	24
Handspikes traversing, field R.M.L. 25-pr.	...	2	...	...	...	...	...	...	...	2
Horns, powder	...	...	...	...	...	...	...	...	...	1
Jacks, lifting, screw, Clerk's	1	...	1	1	...	...	...	...	...	3
Lanyards, friction tube, siege, No. 1	3	3	3	3	...	...	...	...	...	12
Lashings, tarred, 1-inch 24 feet	...	...	...	...	...	...	...	1	...	1
Lashings, tarred, 1-inch 20 ,,	...	...	...	...	...	2	3	8	...	15
Lashings, tarred, 1-inch 16 ,,	...	...	...	...	...	...	...	1	...	1
Lashings, tarred, 1-inch 10 ,,	...	...	...	...	...	1	...	10	...	12
Leathers, gland, hydraulic buffer (spare.)	...	...	1	1	...	...	...	...	...	2
Levers, 12-ft.	...	...	1	...	...	...	...	...	...	2
Limbers field, R.M.L. 25-pr.	...	1	...	...	...	...	...	...	...	1
Limbers siege, R.M.L. 40-pr. howitzer, siege train.	1	...	...	...	...	...	...	...	...	1
Limbers siege, R.M.L. 40-pr. howitzer, siege train.	...	...	1	1	...	...	...	...	...	2
Limbers wagon, store, R.A.	...	...	...	...	...	...	...	...	1	1
Loops, breech, top 40-pr.	1	...	...	...	...	...	...	...	...	1
carriage, R.M.L. 25-pr.	...	1	...	...	...	...	...	...	...	1
Mauls, iron hooped	1	1	1	1	...	1	...	...	1	7
Measures, hydraulic buffer, filling	...	...	1	1	...	...	...	...	...	2
Ordnance, R.M.L. 8-inch howitzer, 70 cwt.	...	...	1	...	...	...	...	...	...	1
Ordnance, R.M.L. 6·6-inch howitzer	...	...	...	1	...	...	...	...	...	1
Ordnance, R.M.L. 40-pr.	1	...	...	...	...	...	...	...	...	1
Ordnance, R.M.L. 25-pr.	...	1	...	...	...	...	...	...	...	1
Pins keep, box lock	2	2	1	1	...	...	...	...	...	6
Pins linch 1st class, steel (spare)	1	...	1	1	...	...	...	...	...	3
Pins linch 2nd ,, ,, ,,	1	2	1	1	1	1	1	1	1	10
Pivots, elevating B	1	...	1	1	...	...	...	...	...	3
Pivots, elevating C	...	1	...	...	...	...	...	...	...	1
Planks moving on guns half... 6 ft. × 12 in.	...	...	...	...	...	...	...	...	...	6
Planks moving on guns half... 4 ,, × 12 ,,	...	...	...	...	...	...	...	...	...	3
Planks moving on guns whole, 10 ., × 17 ,, fir	...	...	...	...	...	...	...	...	...	10
Planks moving on guns whole, 10 ., × 17 ,, oak	...	...	...	...	...	...	...	...	...	3
Planks trail, siege, Mark II	...	...	1	...	...	...	...	...	...	1
Plates, wheel, platform, siege... sets	...	...	1	1	...	...	...	...	..	2
Platforms, siege Clerk's	1	1	...	...	...	...	...	...	...	2
Platforms, siege double decked	...	...	1	1	...	...	...	...	...	2
Plugs, filling hole (spare)	...	...	1	1	...	...	...	...	...	2
Plummets, howitzer	1	1	1	1	...	...	...	...	...	4
Pockets fuze and hook borer	1	1	1	1	...	...	...	...	...	4
Pockets tube, land service	1	1	1	1	...	...	...	...	...	4
Posts, picket, 5 ft.	...	...	...	...	...	...	...	...	...	10
Pickers, vent 17-in.	...	...	2	...	...	...	...	...	...	2
Pickers, vent 12 ,,	2	2	...	2	...	...	...	...	...	6

Digitized by Google

Equipment of Siege Train Companies, 40-pr. and 25-pr. R.M.L. Guns, 8-inch and 6·6-inch R.M.L. Howitzers—*continued.*

TABLE 22—*continued.*

		Gun.		Howitzer.			Wagons.				
		40-pr. R.M.L.	25-pr. R.M.L.	8-inch, 70 cwt.	6·6-inch.	Carts, trench.	Ammunition and store.	Platform. Gun.	Platform. Gyns.	Store, R.A., and limber.	No. per Battery.
	8-inch howitzer, 70 cwt.	...	...	2	...	...	...	...	...	...	2
	6·6-inch howitzer	...	...	...	2	...	...	...	...	...	2
Rammers, R.M.L.	40-pr.	1	...	...	...	...	...	...	...	...	1
	25-pr.	...	1	...	...	...	...	...	...	...	1
	jointed 40-pr.	1	...	...	...	...	...	...	...	...	1
	jointed 25-pr.	...	1	...	...	...	...	...	...	...	1
Range-finders, siege		...	...	...	...	...	...	...	...	...	1
Rollers ground	3 ft. × 6 in. diameter	...	...	...	...	...	...	...	...	...	4
	2½ ,, × 5 ,, ,,	...	...	...	...	...	...	3	3	...	6
	20 in. × 5 in. ,,	...	...	...	...	...	...	1	1	...	2
shifting	No. 3	...	...	1	...	...	...	...	...	...	...
	No. 4	...	...	...	1	...	...	...	...	...	...
Ropes	drag, heavy ... pairs	1	1	1	1	...	1	1	1	1	9
	parbuckling, 18 fms., 4-in.	...	...	...	...	...	...	...	2	...	2
Scotches	large	...	...	...	...	...	...	...	...	...	10
	medium	...	...	...	...	...	...	...	...	...	10
	small	...	...	...	...	...	...	...	...	...	10
Selvagees, ordinary		2	2	2	2	...	...	...	...	...	8
Shot, R.M.L., case	40-pr.	4	...	...	...	...	...	...	...	...	4
	25-pr.	...	4	...	...	...	...	...	...	...	4
Sights, R.M.L.	crossbar fore	1	1	2	2	...	...	...	...	...	...
	crossbar tangent	1	1	2	2	...	...	...	...	...	...
	fore B	1	1	...	...	...	...	...	...	...	...
	tangent	1	1	...	...	...	...	...	...	...	...
Skids	3 ft. × 6 in. × 5 in.	...	...	...	...	...	...	...	...	...	5
	3 ,, × 4 ,, × 5 ,,	...	...	...	...	...	...	...	...	...	5
	3 ,, × 9 ,, × 6 ,,	...	...	...	...	...	...	...	...	...	5
	3 ,, × 6 ,, × 3 ,,	...	...	...	...	...	...	...	...	...	5
	dismounting 14 ft. × 8 in. square prs.	...	...	...	...	...	...	...	...	...	1
	dismounting 14 ft. × 5½ in. square prs.	...	...	...	...	...	...	...	...	...	1
Spanners, hydraulic buffer	No. 1	...	...	...	...	...	...	...	...	...	1
	,, 6	...	...	...	...	...	...	...	...	...	1
Spikes, gun	common	2	2	2	2	...	...	...	...	...	8
	spring C	...	...	1	...	...	...	...	...	...	1
	spring D	1	1	...	1	...	...	...	...	...	3
Sponges, R.M.L.	8-inch, 70 cwt., howitzer	...	...	2	...	...	...	...	...	...	2
	6·6 inch howitzer	...	...	...	2	...	...	...	...	...	2
	40-pr. wire rope stave	1	...	...	...	...	...	...	...	...	1
	40-pr. wood stave	1	...	...	...	...	...	...	...	...	1
	25-pr. wire rope stave	...	1	...	...	...	...	...	...	...	1
	25-pr. wood stave	...	1	...	...	...	...	...	...	...	1
Sticks, portfire		1	1	1	1	...	...	...	...	...	4
Straps	lifting R.B.L., 40-pr.	12	...	...	...	...	...	...	...	...	12
	projectiles R.M.L., 25-pr.	...	13	...	...	...	...	...	...	...	18
	tube box, long	2	2	2	2	...	...	...	...	...	8
	securing, 1 inch × 44 inches	...	...	...	...	...	...	...	...	...	18

Digitized by Google

Equipment of Siege Train Companies, 40-pr. and 25-pr. R.M.L. Guns, 8-inch and 6·6-inch R.M.L. Howitzers—*continued.*

TABLE 22—*continued.*

	Gun.		Howitzer.			Wagons.				
	40-pr. R.M.L.	25-pr. R.M.L.	8-inch, 70 cwt.	6·6-inch.	Carts, trench.	Ammunition and store.	Platform. Gun.	Platform. Gyns.	Store, R.A., and limber.	No. per Battery.
Swingletrees { No. 1 ... (spare)	1	...	1	1	...	...	1	1	...	5
,, 2	...	1	...	...	...	1	...	...	1	4
Tackles, luff, 14 fathoms	2	2	2	2	...	...	...	2	...	10
Tampeons, R.M.L. { 8-in., 70-cwt. howitzer	...	...	1	...	...	...	...	...	...	1
6·6-in.	...	...	...	1	...	...	...	...	...	1
40-pr.	1	...	...	...	...	...	...	...	...	1
25 ,, ...	...	1	...	...	...	...	...	...	...	1
Vent servers, with lanyard	2	2	2	2	...	...	...	...	...	8
Wadhooks, R.M.L. { 8-in., 70-cwt. howitzer	...	...	1	...	...	...	...	...	...	1
,, 46 ,, ,,	...	...	...	1	...	...	...	...	...	...
40-pr.	1	...	...	...	...	...	...	...	...	1
Wagons { ammunition and store, R.A.	...	...	...	...	...	2	...	...	...	2
platform ... { gun, R.M.L., 6·6-in.	...	...	...	...	...	...	1	...	...	1
platform ... { gyns	...	...	...	...	...	...	...	1	...	1
store, R.A.	...	...	...	...	...	...	...	...	1	1
Washers { drag { 1st class (spare)	1	...	1	1	...	...	...	...	...	3
drag { 2nd ,,	...	1	...	...	1	1	1	1	1	7
loop, 2nd class ,,	1	...	1	1	...	...	...	...	...	3
Worms, wadhook, No. 5	...	1	...	...	...	...	...	...	...	1
Wrenches ... { knock-up, carriage, siege-top.	1	1	...	...	...	...	...	...	...	2
pivot, No. 4	1	1	1	1	...	...	...	...	...	4
Vocabulary Section V. (2.)										
Boxes, stars, incendiary	...	...	7	2	...	...	...	...	...	9
Cartridges, drill, R.M.L. { 8-in., 11½-lb.	...	...	1	...	...	...	...	...	...	1
6·6-in., 5 ,, ...	...	...	...	1	...	...	...	...	...	1
40-pr., 6½ ,, ...	1	...	...	...	...	...	...	...	...	1
25 ,, 4½ ,, ...	...	1	...	...	...	...	...	...	...	1
Cartridges, R.M.L., filled, silk cloth { 40-pr., 6½ lbs. R.L.G.[4] ...	100	...	...	...	...	...	...	...	...	100
25 ,, 4½ ,, ,, ...	...	100	...	...	...	...	...	...	...	100
8-in. 11½ lbs. R.L.G.[2] ...	...	...	40	...	...	...	...	...	...	40
8-in. 7 ,, ,, ...	...	...	30	...	...	...	...	...	...	30
8-in. 3½ ,, ,, ...	...	...	30	...	...	...	...	...	...	30
6·6-in. 5 ,, ,, ...	...	...	...	40	...	...	...	...	...	40
6·6-in. 3 ,, ,, ...	...	...	...	35	...	...	...	...	...	35
6·6-in. 2 ,, ,, ...	...	...	...	25	...	...	...	...	...	25
Cases, powder, metal-lined { whole	6	5	9	4	...	...	...	...	...	24
quarter	...	...	...	...	...	...	...	...	...	1
Keys	1	1	1	1	...	...	...	...	...	4
Fuzes* { percussion { direct action, No. 3 ...	...	...	78	78	...	...	...	...	...	156
percussion { direct action, delay, No. 10.	...	...	39	39	...	...	...	...	...	78
percussion { R.L., No. 7	60	60	...	...	...	...	...	...	...	120
time, sensitive { long, No. 23	...	...	10	10	...	...	...	...	...	20
time, sensitive { middle, No. 24 ...	36†	36‡	10	10	...	...	...	...	...	92

* Sections of each of the above-named fuzes to be issued.
† Any 15 sec. with detonators on charge will first be used up.
‡ Any 15 sec M.L. on charge will first be used up.

Digitized by Google

Equipment of Siege Train Companies, 40-pr. and 25-pr. R.M.L. Guns, 8-inch and 6·6-inch R.M.L. Howitzers—*continued.*

TABLE 22—*continued.*

	Gun.		Howitzer.			Wagons.				
	40-pr. R.M.L.	25-pr. R.M.L.	8-inch, 70 cwt.	6·6-inch.	Carts, trench.	Ammunition and store.	Platform. Gun.	Platform. Gyns.	Platform. Store, R.A., and limber.	No. per Battery.
Fuzes,* time, 15 sensitive, middle special priming, No. 42.	...	...	2	2	...	...	...	...	...	4
Gas checks, R.M.L. 8-in. howitzer, 70 cwt.	...	...	99	...	...	...	...	...	...	99
Gas checks, R.M.L. 6·6-in.	...	...	...	99	...	...	...	...	...	99
Gas checks, R.M.L. 40-pr.	97	...	...	...	...	...	...	...	...	97
Gunpowder, shell (F.G.) ... lbs.	...	...	...	...	...	...	...	...	...	20
Handles, light, G.S.	1	1	1	1	...	...	...	...	...	4
Implements, fuze and shell — Bits, hook borer ...	6	6	6	6	...	...	...	...	...	24
Implements, fuze and shell — Cylinders, common ...	1	1	1	1	...	...	...	...	...	4
Implements, fuze and shell — Drivers, screw, shrapnel, large.	1	1	1	1	...	...	...	...	...	4
Implements, fuze and shell — Extractors, fuze, small, rifled.	1	1	1	1	...	...	...	...	...	4
Implements, fuze and shell — Handles, hook borer ...	1	1	1	1	...	...	...	...	...	4
Implements, fuze and shell — Hooks, hook borer ...	1	1	1	1	...	...	...	...	...	4
Implements, fuze and shell — Keys, fuze, universal...	1	1	2	2	...	...	...	...	...	6
Implements, fuze and shell — Spanners, gas check plug, 40-pr.	1	...	...	...	...	...	...	...	...	1
Lights, long, G.S....	8	8	8	8	...	...	...	...	...	32
Match, slow... ... ... lbs.	...	...	1	1	...	...	...	...	...	2
Plugs, fuze-hole — drill, G.S.	2	2	...	...	...	...	...	...	...	4
Plugs, fuze-hole — G.S.	96	96	100	100	...	...	...	...	...	392
Portfires, common	2	2	2	2	...	...	...	...	...	8
Primers, light, G.S.	8	8	8	8	...	...	...	...	...	32
Rockets, signal, 1-lb.	10	10	10	10	...	...	...	...	...	40
Shells, R.M.L., filled — common — 8-in., 70-cwt. howitzer.	...	...	78	...	...	...	...	...	...	78
Shells, R.M.L., filled — common — 6·6-in. howitzer	...	...	...	78	...	...	...	...	...	78
Shells, R.M.L., filled — common — 40-pr.	60	...	...	...	...	...	...	...	...	60
Shells, R.M.L., filled — common — 25 ,, ...	...	60	...	...	...	...	...	...	...	60
Shells, R.M.L., filled — Shrapnel — 8-in., 70-cwt. howitzer.	...	...	20	...	...	...	...	...	...	20
Shells, R.M.L., filled — Shrapnel — 6·6-in. howitzer	...	...	...	20	...	...	...	...	...	20
Shells, R.M.L., filled — Shrapnel — 40-pr.	36	...	...	...	...	...	...	...	...	36
Shells, R.M.L., filled — Shrapnel — 25 ,, ...	...	36	...	...	...	...	...	...	...	36
Shells, R.M.L., filled — star ... 8-in.	...	...	2	...	...	...	...	...	...	2
Shells, R.M.L., filled — star ... 6·6-in.	...	...	...	2	...	...	...	...	...	2
Stars, incendiary	...	...	700	200	...	...	...	...	...	900
Tubes, friction — copper, solid drawn ...	125	125	125	125	...	...	...	...	...	500
Tubes, friction — drill	1	1	1	1	...	...	...	...	...	4
Vocabulary Section VI.										
Barrows, hand, single	...	...	...	...	...	...	...	...	...	2
Brooms, bass — Heads, common ...	1	1	1	1	...	...	...	...	...	4
Brooms, bass — Handles	1	1	1	1	...	...	...	...	...	4
Lanterns, bull's-eye	2	2	2	2	...	...	...	...	...	8
Scissors, lamp ... ... pairs	...	...	...	...	...	...	...	...	...	2

* Sections of each of the above-named fuzes to be issued.

Digitized by Google

Equipment of Siege Train Companies, 40-pr. and 25-pr. R.M.L. Guns, 8-inch and 6·6-inch R.M.L. Howitzers—*continued.*

TABLE 22—*continued.*	Gun.		Howitzer.			Wagons.				No. per Battery.
							Platform.			
	40-pr. R.M.L.	25-pr. R.M.L.	8-inch, 70-cwt.	6·6-inch.	Carts, trench.	Ammunition and store.	Gun.	Gyns.	Store, R.A., and limber.	
Vocabulary Section VII. (1.)										
Binoculars	...	...	...	...	...	...	...	...	...	1
Cases { binocular ...	...	...	...	...	...	...	...	...	...	1
Cases { telescope, 4 feet ...	...	...	...	...	...	...	...	...	...	1
Chains, measuring, 66 feet ...	...	...	...	...	...	...	...	...	...	1
Rods, measuring, common, 6 feet ...	...	...	...	...	...	...	...	...	...	1
Sextants, pocket	...	...	...	...	...	...	...	...	...	1
Stands, telescope, $2\frac{3}{4}$-in. socket ...	...	...	...	...	...	...	...	...	...	1
Tapes, measuring, 50 feet	...	...	...	...	...	...	...	...	...	1
Telescopes { 4 feet	...	...	...	...	...	...	...	...	...	1
Telescopes { signalling	...	...	...	...	...	...	...	...	...	2

The ammunition for the Battery stationed at Woolwich will be stored at Chatham, with the ammunition for the siege train.

Tools, Painting Carriages.

Brushes, paint { Ground 000	1	Triennial supply during peace only.	
Brushes, paint { Sash tool { No. 2	2		
Brushes, paint { Sash tool { ,, 4	1		
Brushes, paint { Sash tool { ,, 6	1		
Brushes, paint { Sash tool { ,, 8	1		
Brushes, sable, writing, duck, large	2		
Cans, paint ... { $7\frac{1}{2}$ inches diameter	1		
Cans, paint ... { 7 ,, ,, ...	1		

MAGAZINE STORES.

Armaments

Only such stores as are sufficient to maintain one laboratory in each Royal Artillery sub-district will be allowed, except on special authority.

Where a laboratory building does not exist, a tent will be used for making up cartridges and filling shells. In such cases, there being no means of upending heavy R.M.L. shells, an extemporised tripod of 12-feet levers (or other suitable spars) will be used, a leading block for the fall of the tackle being made fast to a holdfast (2 pickets will suffice) inside the base of the tripod. A Gibraltar gyn would, if available, equally answer the purpose.

Digitized by Google

Magazine Stores—*continued.*

In laboratories of light structure, where the roof is not strong enough to hold a tackle, the foregoing arrangements will also be adopted, but the feet of the tripod should be secured by cleats nailed to the floor, and an eye-bolt let in as a holdfast for the leading block.

TABLE 23.	Proportions.	Remarks.
Vocabulary Section II. (1).		
Tent Mallets	2 per shell filling room	For rifled ordnance only.
Vocabulary Section III.		
Adzes, coopers, magazine ...	2 per cartridge filling room and 1 per shell filling room.	For opening and heading powder barrels.
Brushes, paint, sash tool, No. 4	2 per shell filling room	1 for stencilling shells, and 1 for cleaning the top of tute of Shrapnel shell after filling or emptying
Drivers, coopers, socket, metal	1 per cartridge filling room, and 1 per shell filling room.	Used with the adze.
Needles, magazine, 4-inch ... nickel silver $1\frac{3}{4}$,, ...	As required ...	For sewing up cartridges filled with grain powder.
Prickers, cartridge, bronze, handled.	As required	For use with the $1\frac{3}{4}$-inch needle when choking cartridges filled with prism powder.
Scissors, magazine ... pairs	2 per cartridge filling room.	Cutting off choke of filled cartridges, &c.
Vocabulary Section IV.		
Blocks, wood, snatch, 8-inch...	1 per shell lift for 7-inch R.B.L. guns.	For changing the lead of the fall.
Brushes, water, carriage ...	2 per shell filling room	For cleaning shells, &c.
Candles, magazine*	1 lb. per lamp	Same as for fighting lanterns.
Cans, oil, feeding, 1 pint ...	1 per work	For feeding the lantern.
Methylated Spirits ... pints	As required	For shellac cement.
Pulleys, differential	3 per 17·72-inch R.M.L. gun.	For shell stores (2 for use, and 1 spare).
Shellac ... ... ozs.	As required	For cement, for affixing tables, tape bands, &c.
Silk Twist ... ... ,,	As required	For making up cartridges.
Tape, white $2\frac{1}{4}$-inch ... ... yds.	As required	For sealing cartridge cylinders.
Tape, white $1\frac{1}{4}$,, ... ,,	As required ...	For sealing tin cylinders.
Tape, white $\frac{7}{8}$,, ... ,,	As required ...	For sealing tin cylinders.
Tape, white $\frac{11}{20}$,, ... ,,	As required	For sealing tin cylinders and boxes.
Tape, white $\frac{1}{4}$,, ... ,,	As required	For sealing tin cylinders.
Travellers, overhead†	3 per 17·72-inch R.M.L. gun.	2 per shell store and spare, for carrying differential pulleys.

* Supplied by Army Service Corps.
† R.E. Stores.

Digitized by Google

Magazine Stores—*continued.*

TABLE 23—*continued.*	Proportions.	Remarks.
Vocabulary Section V. (1).		
Barrows: magazine, single	1 per main magazine ...	For transporting powder within magazine.
Barrows: magazine lamps	1 per work ... }	For conveying the lamps.
Barrows: ,, ,, Trays ...	3 per barrow ... }	
Barrows: projectile	1 per gun, B.L. 12-inch, and R.M.L. 12·5-inch and 12-inch 35 tons.	For service between the laboratory, shell store and shell lift.
Barrows: projectile, No. 10 ...	1 per shell filling room, B.L. 12-inch, and R.M.L. 12·5-inch, and 12-inch 35-ton guns.	For service in the laboratory.
Barrows: projectile	1 per gun, B.L. 8-inch to 10-inch, and R.M.L. 7-inch up to 12-inch 25 tons; also 8-inch and 6·6-inch howitzers.	For service between the laboratory, shell store and shell lift.
Barrows: projectile, No. 11 ...	1 per shell filling room, for B.L. 8-inch to 10-inch and R.M.L. 7-inch to 12-inch 25-ton guns, also 8-inch and 6·6-inch howitzers and 7-inch R.B.L.	For service in the laboratory.
Bolts, eye, lifting projectiles ...	6 per 17·72-inch and 16-inch guns.	Fo lifting projectiles.
Clips, lifting projectiles, 7-inch to 12·5-inch.	2 per shell lift	R.M.L. ordnance only.
Levers, extracting, eye bolt ...	2 per 17·72-inch and 16-inch R.M.L. guns.	For removing eye-bolts and raising projectiles.
Magazines, portable, with trucks	According to circumstances.	Where there are no expense magazines; but metal-lined cases serve the same purpose.
Plates, stencil: Bag	1 per shell filling room	For marking all rifled filled shells which have their bursting charges enclosed in bags.
Plates, stencil: Figures, block, sets	1 per shell filling room	For marking month and year of filling on filled shells.
Plates, stencil: P	1 per shell filling room	For marking shells filled with P and F.G. powder.
Plates, stencil: W, 1½-inch	1 per work	For marking Palliser shot, formerly termed shell, when weighted up with sand.
Plates, stencil: Copper, circular, ½-inch	1 per shell filling room	For stencilling white band round head of steel shells.
Plates, stencil: Copper, circular, ½-inch	1 per shell filling room	For stencilling red band round head of filled shells.

Digitized by Google

Magazine Stores—*continued.*

TABLE 28—*continued.*	Proportions.	Remarks.
Slings, rope, 4-inch, 4 feet long†	1 per shell filling room	B.L. and R.M.L. ordnance, except 17·72-inch.
Stamps, steel, W., ½-inch ...	1 per work	For stamping base plugs of Palliser shot, formerly termed shell, when weighted up with sand.
Tackles, shell room	1 per shell filling room	B.L. and R.M.L. ordnance, except 17·72-inch.
Trolleys, magazine	1 per 17·72-inch R.M.L. gun.	For moving shells.
Vocabulary Section V. (2).		
Apparatus, filling cartridges...	1 per cartridge filling room per nature of cartridge.	For R.M.L. 17·72-inch, 16-inch, 12·5-inch Mark I, 12·5-inch Mark II, and 10·4-inch; also 12·5-inch and 12-inch with stick, and all B.L. 6-inch and upwards.
Blocks, wood, or shell holder...	1 per shell filling room where common shells are filled.	To be made locally when required.
Boots, magazine, leather, pairs	2 per magazine... ...	For wear over the ordinary boots or shoes by inspecting officers, &c.
Boxes, plug and wad, rectangular	1 to 5 guns supplied with diaphragm Shrapnel shell.	For the papier mâché wads and spare loading hole plugs of the shell.
Brushes, cement...	2 per cartridge filling room.	For applying shellac cement.
Cages — cartridge cylinder, A, B, *or* C.	1 per cartridge lift ...	B.L. 6-inch and upwards, and R.M.L. 7-inch guns and upwards, except 17·72-inch guns.
Cages — cartridge cylinder — Ropes — wire (*a*) ...	1 per cartridge lift for B.L. 12-inch and R.M.L. 12·5-inch guns.	In demands, the total length of wire rope should be stated.
Cages — cartridge cylinder — Ropes — hemp* (*a*)	1 per cartridge lift for B.L. 6-inch to 10-inch and R.M.L. guns from 7-inch to 12-inch 35 tons, and 1 per cartridge or shell lift for 7-inch R.B.L. guns.	To be demanded separately and made up locally according to length required. (*a*) To lift cages or cartridge cases.
Cages — cartridge cylinder — Counterweights, Hooks, Thimbles		
Cages — projectile, B.L., 6-inch	1 per circular shell lift	For raising the projectiles.
Cages — shell, R.B.L. 7-inch ...	1 per shell lift for 7-inch R.B.L. gun.	For raising the projectile.

* In cartridge or shell lifts, where there are evident signs of damp, the hoisting rope is to be kept in a dry store, and not reeved until required.

† As these slings become unserviceable they will be replaced by "Selvagees, projectile," which will be made locally.

Digitized by Google

Magazine Stores—*continued.*

TABLE 23—*continued.*	Proportions.	Remarks.
Cases, powder: cylindrical; metal lined*: whole, half, quarter	In proportion to cartridges to be filled and friction tubes to be maintained.	
Cases, powder: metal lined*: Keys ...	3 per cartridge filling room and 1 per magazine or cartridge store where metal-lined cases are stored.	For opening ammunition barrels and metal-lined cases.
Discs, base plug: large	1 per empty common shell with O.P. base plugs 12-inch B.L. Marks I and II, 9·2-inch B.L. Marks I and II, and 6-inch B.L. Marks I V and V.	To be fixed over head of plug after shell is filled.
Discs, base plug: small	1 per empty common shell with O.P. base plugs 6-inch B.L. Marks I, II and III, and 5-inch B.L. Marks I and II.	To be fixed over head of plug after shell is filled.
Discs, wood, for building up cartridge	1 per shell filling room	For 17·72-inch R.M.L. guns. (To be made locally).
Funnels, cartridge	3 per cartridge filling room.	For filling cartridges, except those of prism powder.
Gauges, cartridge: length, universal ...	1 per cartridge filling room, for B.L., R.B.L. and R.M.L. ordnance.	To gauge the length.
Gauges, cartridge: ring	1 per cartridge filling room, for each nature.	Except for mortars and carronades.
Hides, powder	As may be considered necessary by Officer Commanding R.A., according to description of work.†	Hides, with wadmiltilts over, are placed on the floor when barrels or cases are moved or opened.
Implements, fuze and shell‡: Blocks, riveting ...	1 per shell filling room.	For S.B. ordnance, except mortars.
Implements, fuze and shell‡: Chisels, metal... ...	1 per shell filling room	For removing discs and rings from base of B.L. shells.
Implements, fuze and shell‡: Drifts: common	1 per shell filling room.	For S.B. ordnance, except mortars.
Implements, fuze and shell‡: Drifts: diaphragm Shrapnel: large	2 per shell filling room.	For S.B. ordnance, except mortars.
Implements, fuze and shell‡: Drifts: diaphragm Shrapnel: small	1 per shell filling room.	For S.B. ordnance, except mortars.

* Zinc cylinders are employed instead for the filled cartridges of R.M.L. guns, 7-inch and over.

† But in no case to exceed 3 per magazine. For use in laboratories only.

‡ When shell-filling rooms are used in common for both rifled and smooth-bore ordnance, a double supply of the implements which are used with both should not, except under very special circumstances, be demanded.

Digitized by Google

Magazine Stores—*continued.*

TABLE 23—*continued.*

		Proportions.	Remarks.
Implements, fuze and shell*	Drifts, G.S.	1 per shell filling room	For rifled ordnance where the bursting charges are not contained in bags.
	Drivers, screw, Shrapnel: large	1 per shell filling room	For all rifled and S.B. ordnance above 18-pr. with Shrapnel shells.
	Drivers, screw, Shrapnel: small	1 per shell filling room	For S.B. ordnance, 18-pr. and under, with Shrapnel shells.
	Extractors, fuze, small: rifled	1 per shell filling room	For rifled ordnance with time fuzes.
	Extractors, fuze, small: S.B.	1 per shell filling room	For S.B. ordnance with time fuzes, except cast-iron mortars.
	Funnels, shell: copper: large ...	1 per shell filling room, for shells for 16-inch R.M.L. guns and upwards.	
	Funnels, shell: copper: small ...	1 per shell filling room, for shells under 16-inch and which contain their bursting charges in bags.	For use with the brass rods for filling shells.
	Funnels, shell: leather: common, large	2 per shell filling room, for shells which have no bags.	For all ordnance, but only one allowed where there is S.B. only.
	Funnels, shell: leather: diaphragm Shrapnel: large ...	1 per shell filling room	For S.B. ordnance above 18-pr., with Shrapnel shells.
	Funnels, shell: leather: diaphragm Shrapnel: small ...	1 per shell filling room	For S.B. ordnance, 18-pr. and under, with Shrapnel shells.
	Hammers: riveting	1 per shell filling room	For S.B. ordnance, except mortars.
	Hammers: metal ...	1 per shell filling room	For removing discs and rings from base of B.L. shells.
	Holders, shell... ...	1 per shell filling room, for each nature of shell.	For B.L. 6-inch and over and R.M.L. 80-pr. guns and over, and 6·6-inch howitzer, also 4·7-inch Q.F. gun.
	Hooks, G.S. wad ...	1 per shell filling room, for shells for rifled guns.	For removing wad when examining shells.
	Keys, fuze and plug, G.S.†	2 per shell filling rooms	For all ordnance, except cast-iron mortars, but only 1 allowed where there is none but S.B.
	Keys, fuze and plug, G.S.†	1 per expense shell store.	For all ordnance except mortars; to loosen plugs previous to issue of shell.

* When shell-filling rooms are used in common for both rifled and smooth-bore ordnance, a double supply of the implements which are used with both should not, except under very special circumstances, be demanded.

† Will be replaced by the "Key, fuze, universal," as the present store becomes used up.

Digitized by Google

Magazine Stores—*continued.*

TABLE 23—*continued.*

		Proportions.	Remarks.
Implements, fuze and shell*	Keys, 4·7-inch: inserting primer	1 per 2 guns or less.	
	Keys, 4·7-inch: removing primer		
	Mallets: common (and diaphragm Shrapnel)	1 per shell filling room	For S.B. ordnance, except cast-iron mortars.
	Mallets: mortar	1 per shell filling room	For cast-iron mortars.
	Pincers: fuze, Armstrong	1 per laboratory, at such stations only as are supplied with presses for pressing lead cap on to Armstrong base percussion fuze for 4·7-inch Q.F. gun.	For extracting lead cap of Armstrong base percussion fuze.
	Pincers: Shrapnel pimer pairs	1 per shell filling room, for rifled Shrapnel shells	For removing primers when examining shells.
	Prickers, wax	1 per shell filling room.	
	Punches, riveting ...	1 per shell filling room.	For S.B. ordnance, except mortars.
	Rectifiers, rivet hole...	1 per shell filling room.	
	Rods, filling shell: large ...	1 per shell filling room, for 16-inch R.M.L. guns and upwards.	
	Rods, filling shell: small ...	1 per shell filling room, for shells under 16-inch, and which contain their bursting charges in bags.	For use with the copper funnels, for filling shells with bags.
	Scrapers, shell: 17·72-in. / 12·5 ,, / 9 ,, / 64-pr.	As required	To search interior of shells.
	Spanners: box	1 per shell filling room	For S.B. ordnance, except mortars.
	Spanners: gas check: nut, 7-in.	1 per shell filling room	For 9-inch R.M.L. guns and over, except 17·72-inch R.M.L.
	Spanners: gas check: plug,‡ 64-pr.	1 per shell filling room	For 8-inch, 46 cwt. and 6·3-inch howitzers only.
	Wrenches, base plug	1 per shell filling room	For projectiles having base plugs.
Lamps, magazine	partition / passage / wall	According to the construction of the magazine.§	These lamps burn the same pattern candles as the fighting lanterns.
Lanterns, hand, magazine ...		1 per work‖	Fitted with oil lamp.¶
Luting ... ... lbs.		As required	For closing lids of cartridge cases, &c.

* When shell-filling rooms are used in common for both rifled and smooth-bore ordnance, a double supply of the implements which are used with both should not, except under very special circumstances, be demanded.

‡ This wrench is not to be used for tightening fuze hole plugs.

§ 2 passage and 35 wall lamps per work are allowed for 17·72-inch guns.

‖ 4 per work for 17·72-inch R.M.L. guns at Gibraltar and Malta.

¶ Colza oil and wick for these are supplied by the Army Service Corps.

Digitized by Google

Magazine Stores—*continued.*

TABLE 28—*continued.*	Proportions.	Remarks.
Measures, powder (12 oz. 3 oz.; 10 ,, 2½ ,,; 8 ,, 2 ,,; 7 ,, 1 ,,; 5 ,, ½ ,,; 4 ,, ¼ ,,)	1 of each per laboratory or cartridge filling room, as may be required, according to nature of armament in the district.	For measuring bursting charges, &c.
Rings, base plug (large ...)	1 per empty cast steel common shell with adapter or large base plug, 13·5-inch and 12-inch B.L.	To seal joint between adapter or plug and shell, after shell is filled.
Rings, base plug (small ...)	1 per empty cast steel common shell with adapter or large base plug, 10-inch and 9·2-inch B.L.	To seal joint between adapter or plug and shell, after shell is filled.
Scales, weighing powder (28 lbs. ...)	1 per cartridge filling room, for 9-inch guns and over.	To weigh the heaviest charges.
Scales, weighing powder (8 ,, ...)	1 per cartridge filling room, for lighter natures.	May also be demanded, where required, for mortar batteries.
Scoops, powder, 8½-inch ...	2 per cartridge and shell filling rooms.	For all ordnance.
Shoes, magazine ... pairs*	1 per shell or cartridge lift.	For B.L. 12-inch, and R.M.L. 12·5-inch guns, 2 pair per lift.
	2 per shell or cartridge store.	
	6 or less per laboratory or magazine.	Or tent where no laboratory is provided.
Shovels, copper, small	1 per magazine or laboratory.	A hand brush will be supplied by the Barrack Department on inventory.
Stages, magazine...	1 per cartridge store where required.	
Straps, removing lids of cartridge cylinders ... pairs	1 per cartridge store of each nature.	Opening zinc cylinders of the first patterns only for 7-, 9-, and 10-inch R.M.L. guns.
Wadmilltilts	As may be considered necessary by O.C. R.A., according to description of work.†	For protecting ammunition, or placing on the floor over hides when barrels or cases are moved or opened.
Vocabulary Section VI.		
Corkscrews	1 per laboratory for 8-inch mortars.	For removing the cork plug.
Scissors, lamp ... ... pairs	1 per work	For trimming wicks.
Weights, gunmetal (14, 7, 4, 2, and 1 lb.)	1 of each per powder weighing scale, 28 lbs.	
Weights, gunmetal (7, 4, 2, and 1 lb. ...)	1 of each per powder weighing scale, 8 lbs.	
Vocabulary Section VII (1).		
Thermometers (common ...)	1 per magazine containing gunpowder.	For use in ventilating magazines.
Thermometers (wet and dry bulb, common)	1 or more per S.D.	For use in ventilating magazines.

* 24 pairs per work for 17·72-inch guns.

† But in no case to exceed 3 per magazine. For use in laboratories only, for 7·72-inch, 3 per work.

Digitized by Google

TABLE 24. Army Books and Forms for Armaments.

Army No.	Subject.	Description.
Books.		
195, 196	Equipment	Receipt journal. / Issue journal.
211	,, ...	Distribution book for Master Gunners.
101	,, ...	Register of district store vouchers.
Forms.		
G 800	Stores for existing armaments	Annual estimate.
G 801	Stores for other than existing armaments.	
G 908	Equipment of garrison ordnance ...	Statement.
G 908A	Equipment of forts and batteries ...	Annual account.
G 932	Equipment of garrison ordnance amendment	Statement.
G 875	Ordnance which have fired the prescribed number of rounds	
G 1029	Stores expended in cleaning, painting, &c.	
G 905	Ammunition expended in firing salutes	
G 869	S.B. Ordnance	Annual return.
G 872	R.M.L. Ordnance	
G 925	B.L., R.B.L. and Q.F. Ordnance ...	
G 885	Ordnance and general stores	Annual account.
G 844	Mounted ordnance	Annual return.
MS.	Dismounted ordnance	
G 887	Ordnance and stores in charge of O.S.D.	
G 889	Rifled Field ordnance equipped	
G 909	Machine guns	
G 819	Changes in armaments	Monthly return.
G 865	Gunpowder on charge	Half yearly return.
G 862	Gunpowder expended	
G 864	Gunpowder, examination of	Report.
G 877	Regulations for lighting magazines ...	Regulations.
G 948	Return of quick-firing and machine guns	Monthly.
G 899	Directions for making up cartridges for M.L. and B.L. rifled ordnance	Regulations.
G 910	Instructions for the preparation of shells and fuzes, rifled ordnance	
G 907	Lubrication of carriages and slides ...	
G 980, F 754	Stores	Carrier's note. / Convoy note.
G 997, G 1033, P 1925	Equipment in general (*blank*)	Requisition. / Receipt and issue voucher. / Expense voucher.
G 1027	Equipment in general materials for repair	Requisition.
G 888	Ordnance stores	
O 1677	Cleaning and painting guns, &c... ...	Working pay list.
G 1049	Ammunition and stores	Transfer, conversion, and expenditure voucher.
G 849	History sheet, depression range finder	Record.
G 879	Magazine, &c., care of	Regulations.
G 883, G 882	Ordnance and stores, siege train ...	Requisition. / Receipt and issue voucher.
G 944, G 945	Thermometers { wet and dry bulb ... / common	Daily record.
G 968	Camp equipment, regular services ...	Requisition.

Digitized by Google

2. GENERAL LISTS OF COMPONENT AND SPARE PARTS

CONTENTS.

	PAGE
Fittings and component and spare parts for Land Service B.L. guns	840
Fittings and component and spare parts for Land Service R.M.L. guns and howitzers	852
Fittings, and component and spare parts for Land Service R.B.L. and S.B.B.L. guns	858
Spare B.L. carriages, and component and spare parts	862
Garrison B.L. slides, and component and spare parts for same	900
Spare iron garrison sliding carriages, and component and spare parts for the same	918
Spare iron traversing slides, L., and component and spare parts for the same	942
Spare beds and carriages for medium ordnance, and component and spare parts for the same	974
Spare Moncrieff wrought-iron garrison carriages, and component and spare parts for the same	996
Spare platforms, ground, and slides, L., for medium, rifled and S.B. ordnance, with component and spare parts for the same	1008
Fittings, component and spare parts of ordnance, quick-firing, 4·7-inch, Mark I. and II.	1018
Spare parts for 4·7-inch Q.F. mountings	1019
Leathers for 4·7-inch Q.F. mountings	1021
Spare stores allowed for working guns which form the armament of districts, and for magazines	1021

Digitized by Google

FITTINGS AND COMPONENT AND SPARE PARTS FOR LAND SERVICE B.L. GUNS (12-INCH TO 4-INCH).

Articles.	Ordnance, B.L. — Component Parts.												Spare.	
	12-inch, Mark I and IA.	12-inch, Mark VI and VII.	10-inch, Mk. I.	10-inch, Mark II, III.	9·2-inch, Mark I, U.C.	9·2-inch, Mark I, C.	9·2-in., Mk. IV, IV A.U.C., and VI B.	9·2-inch, Mark IV C, VI.	8-inch, Mark VII.	6-inch, Mark II, P.	6-inch, Mark IV and VI.	6-inch, Mk. V.	5-inch, Mark IV and V.	4-inch, Mk. IV.	Per gun.	No. of guns or less in a Fort or Battery.
Vocabulary Section V. (1).																
FITTINGS.																
Ordnance, B.L.																
bolts { stop, steel, for breech screw	1	1	1	...	...	1	1	1	...	...	1	...	1	1	...	1 to 10
bolts { vent, with spring and nut	...	...	...	...	...	...	...	...	1	...	...	...	...	...	1	...
boxes, slide, steel { in halves, with right and left hand keys, 2 keep pins, lanyard bolt, nut and spiral spring	...	...	1	...	...	...	...	...	...	1	1	1	1	1	...	1 to 10
elevating { in 2 parts	1	1	...	1	1	1	1	1	...	...	...	...	...	...	1 to 10	...
elevating { bronze, with 2 studs, 2 keep pins, and 6 fixing screws	1	1	...	...	...	...	...	...	...	...	...	...	...	...	...	...
elevating { bronze, with 2 pivots, 2 keep pins, 5 hexagon-headed, and 1 flat-headed fixing screw	...	...	...	...	...	...	...	...	1	...	...	...	...	...	...	...
foresight, land, bronze, { right	...	...	1	...	...	...	1	1	...	1	...	...	...	...	...	...
foresight, land, bronze, { left	...	...	1	...	...	...	1	1	...	1	...	...	...	...	...	...
with fixing screws	...	...	...	...	...	...	...	...	...	...	...	1	...	...	...	...
brackets { retaining carrier, steel (open), with 4 fixing screws	...	...	...	...	...	...	...	...	...	...	...	...	...	...	1 to 5	...
brackets { spindle worm, bronze, with 4 fixing screws ...	...	...	...	...	...	1	...	...	...	...	...	...	...	...	...	...
tangent, sight { left, bronze, with 4 fixing screws...	...	...	1	...	...	...	1	1	...	...	...	...	...	...	...	...
tangent, sight { right, bronze, with 4 fixing screws, 1 special left top	...	...	1	...	...	...	1	1	...	...	...	...	...	...	...	...

Digitized by Google

Ordnance, B.L., carriers	bronze, with hinge bolt (bearing collar for 8-in. Mk. VII guns only), washer and keep pin; lever retaining carrier open, with axis pin, washer, keep pin, flat spring, and fixing screw; lever retaining carrier closed, with axis pin, washer, and keep pin	flat spring and 2 fixing screws, and stop for breech screw, with spiral spring, lever, axis pin, washer, and keep pin plunger and spiral spring	...	...	...	...	...	...	1	...	...	...	...	...	1 to 10
	bronze, with cover, washer, and fixing screw; lever, retaining carrier (closed), with axis pin, flat spring, and 2 fixing screws; stop for breech screw, with spiral spring, lever, directing stop, with axis pin		...	...	...	...	...	...	1	...	...	...	...	...	1 to 10
	bronze, with hinge bolt, washer, rack pinion, worm wheel, collar, and 2 fixing screws; clutch with handle, hinge roller and axis pin bearing, roller (cone) with axis pin, 4 rollers for breech screw, with axis pins; cover plate, fixing screw, and washer; stop for breech screw, with spiral spring; lever directing stop, and axis pin; lever, retaining carrier (closed), flat spring, and 2 fixing screws; stop retaining carrier (open), with spiral spring, spindle, releasing handle and keep pin, collar and keep pin and lever, directing stop (retaining carrier open), chain and stop pin		...	...	...	...	1	...	...	...	...	...	...	1 to 5
	bronze, complete, with hinge bolt and washer, hinge roller and axis pin, bearing roller (cone), with axis pin; 4 rollers for breech screw, with axis pins; cover plate, fixing screw, and washer: stop for breech screw, with spiral spring; lever, directing stop, and axis pin; lever retaining carrier (closed), flat spring, and 2 fixing screws; stop retaining carrier (open), with spiral spring, spindle releasing handle and keep pin, collar and keep pin, and lever, directing stop retaining carrier (open)		...	...	...	...	1	...	...	...	...	...	...	1 to 5

NOTE.—*a* denotes the guns to which the articles shown as allowed spare belong. 1 spare gun will be allowed, if available, for 20 pieces or less of the same nature in each district abroad.

Digitized by Google

Fittings and Component and Spare Parts for Land Service B.L. Guns (12-inch to 4-inch)—*continued.*

Ordnance, B.L.	Articles.	Component Parts.												Spare.	
		12-inch, Mark I and I A.	12-inch, Mark VI and VII.	10-inch, Mk. I.	10-inch, Mark II, III.	9·2-inch Mark I, U.C.	9·2-inch Mark I, C.	9·2-in., Mk. I V, IV A, U.C., and VI II.	9·2-inch Mark IV C, VI.	8-inch, Mark VII.	6-inch, Mark II, P.	6-inch, Mark IV and VI.	6-inch, Mk. V.	5-inch, Mark IV. and V.	4-inch, Mk. IV.	Per gun.	To No. of guns or less in a Fort or Battery.
Ordnance, B.L.	clips, retaining carrier (bronze, with spring)	...	...	...	...	...	...	...	...	...	1	...	...	...	...	...	...
	electric, aluminium bronze, consisting of stud bracket with insulating bush, 2 washers, retaining screw and 2 fixing screws, 2 cover plates and 2 fixing screws	...	...	...	1	...	1	...	...	...	...	...	...	...	...	...	1 to 5
	contacts { electric frame fixed, aluminium bronze, with insulating bush and washer; washer, case, retaining nut and fixing screw, and lead	1	...	1	...	...	...	1	1	...	...	...	...	...	...	1	..
	contacts { lock electric B, aluminium bronze, consisting of block with 2 terminal points, insulating bush and washer, washer and retaining nut and lead; contact upper, with insulating bush and washer, case nut, and spiral spring	*a*	*a*	*a*	*a*	*a*	*a*	*a*	*a*	...	...	...	...	...	...	6	...
	cover, lead bronze, with 2 fixing screws*	1	1	...	1	...	...	1	1	...	...	...	...	...	...	...	...
	cups, obturating { large, steel	...	...	...	...	...	...	...	...	*a*	*a*	*a*	...	...	...	2	...
	cups, obturating { small, steel	...	...	...	...	...	...	...	...	1	1	1	...	...	...	2	...
	discs { bolt, vent, brass	...	...	...	...	...	...	...	...	3	...	*a*	*a*	*a*	...	18	...
	discs { cup, brass, adjusting, obturating cup	...	...	...	...	...	...	...	...	*a*	*a*	*a*	*a*	*a*	...	3	...
	discs { adjusting, steel	2	2	2	2	2	2	2	2	...	...	...	...	...	2	2½	...
	discs { pad, obturating { protecting, tin, 2 to a set, front and rear	1	1	1	1	1	1	1	1	...	...	...	2	1	1	5‖	...
	firing pin, lock, percussion D, steel	*a*	*a*	...	*a*	*a*	*a*	*a*	*a*	...	...	...	...	...	...	10	...
	extractors, lock, electric B, steel, with axis pin, spiral spring and lanyard (and for locks, percussion D)	*a*	*a*	...	*a*	*a*	*a*	*a*	*a*	...	...	...	...	...	...	2††	...
	guide for lock, steel, with spiral spring and set screw ...	...	...	...	...	...	...	...	...	...	...	...	1	...	...	...	...

Digitized by Google

Ordnance, B.L.	holders, tube	electrical, steel, vent sealing tube, with screw and nut	...	...	...	...	...	...	...	...	1	...	...	...	...	...	1	...
		mechanical, steel, vent sealing tube, with needle, spring, and screw nut	...	...	...	...	...	...	...	...	1	...	...	...	...	...	1	...
	lanyard bolts, steel, with nut and spiral spring		...	...	a	...	...	...	...	...	...	a	a	a	a	a	1	...
	lever, cam, steel, with hinge bolt	and keep pin, and catch and spiral spring (for breech screw)	...	...	...	...	...	...	...	...	...	...	a	...	...	...	...	1 to 10
		and nut (for breech screw†)	...	...	...	...	...	...	...	...	a	...	...	a	...	...	...	1 to 10
		nut and keep pin	a	a	a	a	a	a	a	a	...	...	...	...	...	...	...	1 to 10
		and keep pin	...	...	...	...	...	...	...	...	...	...	...	...	a	a	...	1 to 10
		collar and keep pin	...	...	...	...	...	...	...	...	...	a	...	...	...	...	...	1 to 10
	levers	cocking, lock, percussion D, steel, with axis pin ...	a	a	...	a	a	a	a	a	...	...	...	...	...	...	2	...
		ratchet, breech screw, steel, with removable plate and 3 fixing screws; axis pin, washer, and keep pin; ratchet wheel, with tappet and fixing screw; pawl, with axis pin and handle (and nut for 12-inch Mark I and Mark IA guns only), pin directing, pawl, with spiral spring; link for ratchet, link for sliding block, with hinge bolt and sliding block with gudgeon (catch retaining ratchet lever complete, 9·2-inch U.C. only, and 10-inch on H.P. carriages)	1	1	1	1	1	1	1	1	...	...	...	...	...	...	...	1 to 10
		spindle, worm, steel, gear controlling, breech screw	...	...	1	a	...	a	...	a	...	...	...	...	...	...	...	1 to 5
	locks	electric B, steel (for wired tubes), consisting of frame, block with 2 terminal points, insulating bush and washer; washer and retaining nut, lead and retaining cap; contact upper insulating bush and washer; washer, case, and nut, spiral spring and cap retaining contact; cover for lead; guide bolt with spiral spring handle, and keep pin; extractor, with axis pin, spiral spring, and lanyard	1	1	...	1	1	1	1	1	...	...	...	...	...	...	1	...
		percussion, steel, with lock frame, guide bolt, spiral spring, head and keep pin; hammer, hinge pin, and flat spring; trigger, axis pin, flat spring, and fixing screw; trigger-guard and fixing screw; hammer-guard, flat spring, and fixing screw; striker, spiral spring, and securing nut, with set screw	...	...	1	...	...	...	...	...	...	1	1	1	1	1	1	...

* 3 screws for 10-inch and 4 for 12-inch. † With washer for 6-inch. § 2 per gun, 6-inch, 5-inch, and 4-inch.
‖ 3 per gun, 6-inch, 5-inch, and 4-inch. †† For each lock.

Digitized by Google

Fittings and Component and Spare Parts for Land Service B.L. Guns (12-inch o 4-inch)—*continued.*

Ordnance, B.L.	Articles.	Component Parts. 12-inch, Mark I and I A.	12-inch, Mark VI and VII.	10-inch, Mk. I.	10-inch, Mark II, III.	9·2-inch, Mark I, U.C.	9·2-inch, Mark I, C.	9·2-in., Mk. IV, A.U.C., IV and VI B.	9·2-inch, Mark IV C, VI.	8-inch, Mark VII.	6-inch, Mark II, P.	6-inch, Mark IV and VI.	5-inch, Mark IV and V.	6-inch, Mk. V.	4-inch, Mk. IV.	Spare. Per gun.	Spare. To No. of guns or less in a Fort or Battery.
	percussion D, steel, consisting of frame, striker with fixing pin, spindle, keep pin and spiral spring, and retaining cap; cocking lever with axis pin; trigger with axis pin, and spiral spring; guide bolt with spiral spring, handle, and keep pin; extractor with axis pin, spiral spring, and lanyard	1	1	...	1	1	1	...	1	...	...	...	...	...	...	1	...
	needles, steel, striking tube	...	1	1	1	1	1	1	1	a	...	1	1	1	1	3	...
	pads, obturating, asbestos, canvas covered, annular ...	...	...	1	a	a	a	a	a	...	...	...	...	...	...	3	...
	pinions, rack, steel, gear controlling, breech screw...	...	...	a	...	...	...	...	a	a	a	a	a	a	...	...	1 to 10
locks	carrier, steel, split	...	...	...	...	...	...	...	...	a	...	...	...	...	...	2	...
	lever, steel, split	...	...	...	...	...	...	...	...	a	...	...	...	...	...	2	...
	cam, steel, bulb-head, length 4·2 in (for 12-in gun)	...	...	...	...	...	...	...	...	a	...	...	...	...	...	2	...
pins, keep	bolt, hinge	a	...	...	...	...	...	...	...	...	...	...	...	...	a	2	...
	ring carrier, length 6 inches ...	...	...	...	...	...	...	...	...	...	...	...	...	...	a	2	...
	steel, bulb-head, 4 ,, ...	...	...	...	...	...	...	...	...	...	...	...	...	...	...	2	...
	,, 3·5 ,, ...	...	...	...	...	...	...	...	...	...	...	...	...	...	...	2	...
	guide for lock	...	...	a	...	...	...	...	...	...	...	...	...	...	...	4	...
	keys, length 1·9 inches ...	...	...	...	...	...	...	...	...	...	...	...	...	...	a	4	...
	box ,, 1·25 ,, ...	...	...	...	...	...	...	...	...	...	...	...	...	a	...	4	...
	slide, ,, 1·425 ,, ...	...	...	...	...	...	...	...	...	...	...	...	a	...	...	4	...
	steel ,, 1·2 ,, ...	...	...	...	...	...	...	...	...	...	...	a	...	...	...	4	...
	nut, bolt, hinge, carrier, ring, steel, split ...	...	...	a	a	...	...	...	...	...	...	...	...	...	...	2	...

Digitized by Google

Ordnance, B.L.	pins, keep	nut	bolt, hinge, lever, cam	steel, split (also pin, axis, lever, ratchet, except 12-inch)	a	a	a	a	a	a	a	a	...	...	...	...	...	...	4	...
				steel, bulb-head ...	...	...	...	...	...	...	...	...	...	a	...	...	a	a	2	...
			latch, carrier ring, steel, taper ...	...	...	...	a	a	...	...	a	a	...	...	...	...	...	...	2	...
			spindle worm, steel, split for lever ...	...	...	...	a	a	...	a	..	a	...	...	...	...	...	...	2	...
		pin, axis	hammer, firing, steel, split ...	...	...	...	...	...	...	...	...	...	a	...	...	...	...	..	2	...
			ratchet, steel, split ...	a	a	...	a	a	a	...	...	...	...	...	...	...	...	...	2	...
			lever, retaining	closed, steel, split, carrier	...	...	...	...	a	a	...	...	a	...	...	...	...	...	2	...
				open, steel, split, carrier	...	...	...	...	a	a	...	...	a	...	...	...	...	...	2	...
				safety slide, steel, split ...	...	...	...	...	...	...	...	...	a	...	...	...	...	...	2	...
				stop, breech screw, steel, split...	...	...	...	...	...	...	...	...	a	...	...	...	...	...	2	...
		pivot, bracket, elevating, steel ...	...	...	...	...	...	...	...	...	...	...	a	...	...	...	...	...	4	...
		screw, pivot, latch carrier ring, bulb-head, 3·5 in.	...	...	...	a	..	...	a	a	...	...	...	...	...	...	...	...	2	...
		stud, elevating, steel, taper, length 7 inches ...	a	a	...	...	...	...	...	...	...	...	...	...	...	...	...	...	4	...
		worm spindle, steel, split ...	...	...	a	a	...	...	...	a	...	...	...	...	...	...	...	...	2	...
	plates	hinge, steel, with 3 fixing screws (and hinge pin for 6-in. II, P.)	...	...	...	...	1	1	...	...	...	1	...	...	...	...	...	...	...	1 to 5
		preserving, sight, tangent* ...	...	...	...	...	...	...	...	...	...	...	...	...	...	...	1	1	...	...
	plugs, preserving, sight, fore* ...	...	...	...	...	...	...	...	...	...	...	...	...	...	...	...	1	1	...	...
	racks, breech screw, steel, gear controlling, breech screw...	...	...	a	a	...	a	...	a	...	...	...	...	...	...	...	...	...	...	1 to 10
	rings, carrier	bronze, with hinge bolt (collar and 2 fixing screws, clutch with handle for 9·2-inch IV C and VI), nut and keep pin, distance piece (10-inch only), rack pinion, worm wheel, worm spindle, with worm, keep pin, 4 washers, lever nut, and keep pin; roller frame, with 7 coned rollers, 2 bearing plates, and washers; clip, carrier ring, with axis pin and flat spring; latch carrier ring, with spiral spring, nut, and keep pin; lever with axis pin and keep pin; link with nut and keep pin; and handle, retaining latch, with keep pin	...	...	a	1	...	...	...	1	...	...	...	...	...	...	...	...	1 to 10

* For guns fitted with telescopic sights.

Digitized by Google

Fittings and Component and Spare Parts for Land Service B.L. Guns (12-inch to 4-inch)—*continued.*

Articles.		Ordnance, B.L. Component Parts. 12-inch, Mark I and IA.	12-inch, Mark VI and VII.	10-inch, Mk. I.	10-inch, Mark II, III.	9·2-inch, Mark I, U.C.	9·2-inch, Mark I, C.	9·2-in., Mk. I V, IV A.U.C., and VI B.	9·2-inch, Mark IV C, VI.	8-inch, Mark VII.	6-inch, Mark II, P.	6-inch, Mark IV and VI.	6-inch, Mk. V.	5-inch, Mark IV and V.	4-inch, Mk. IV.	Spare. Per Gun.	To No. of guns or less in a Fort or Battery.
Ordnance, B.L.	rings, carrier	bronze, with hinge bolt, washer, and keep pin; roller frame, with 7 coned rollers and 2 bearing plates, clip carrier ring, with axis pin and flat spring; catch cam lever down, with lever, axis pin, and spiral spring, latch carrier ring, with spiral spring, collar, and keep pin; lever, link, nut, and keep pin, pivot screw and keep pin	...	...	...	...	...	1	...	...	...	...	...	...	...	...	1 to 10
		steel, with hinge bolt and keep pin; hinge roller and axis pin; 2 bearing rollers, with axis pin and blocks; clip retaining axis pin and flat spring; guide for lock, with fixing screw; and roller frame with 7 coned rollers	1	...	...	...	...	...	...	...	...	...	...	...	...	...	1 to 10
		steel, with hinge bolt and keep pin; retaining clip axis pin and flat spring; retaining latch, axis pin, stud, and spiral spring; guide for lock (for 6-inch, Mark IV, in 2 parts), with spiral spring and bolt	...	...	...	...	...	...	...	...	...	...	1	1	...	1 to 10
		bronze, with hinge bolt, 4 bearing rollers, with blocks; clip retaining with axis pin and flat spring; roller frame with 7 coned rollers, 2 bearing plates, and washer	1	1	...	...	...	...	...	...	...	...	...	...	...	...	1 to 10
	rings, obturating, copper	... ...	...	...	...	...	...	...	...	...	a	a	a	...	...	2	...
	screws, bracket, elevating { fixing	... ...	a	a	...	...	...	...	...	...	...	...	...	...	...	2	...
	screws, bracket, elevating { preserving	... ...	6	6	...	...	...	...	...	...	...	...	...	3	...	...	...

Digitized by Google

| | | |

Fittings and Component and Spare Parts for Land Service B.L. Guns (12-inch to 4-inch)—*continued.*

Articles.	Ordnance. B.L. Component Parts. 12-inch, Mark I and I A.	12-inch, Mark VI and VII.	10-inch, Mk. I.	10-inch, Mark II, III.	9·2-inch, Mark I, U.C.	9·2-inch, Mark I, C.	9·2-in., Mk. IV. IV A.U.C., and VI B.	9·2-inch, Mark IV C. VI.	8-inch, Mark VII.	6-inch, Mark II, P.	6-inch, Mark IV and VI.	6-inch, Mk. V.	5-inch, Mark IV and V.	4-inch, Mk. IV.	Spare. Per gun.	To No. of guns or less in a Fort or Battery.
Ordnance, B.L. screws, bracket elevating fixing ...	*a*	*a*	...	...	...	...	...	...	*a*	...	...	...	...	...	2	...
Ordnance, B.L. screws, bracket elevating preserving ...	6	6	...	...	...	...	...	...	6	...	...	...	3	...	...	...
Ordnance, B.L. screws, bracket fore sight fixing ...	..	...	...	...	...	...	...	...	...	*a*	...	...	...	...	2	...
Ordnance, B.L. screws, bracket fore sight preserving ...	...	...	...	...	...	...	...	...	...	6	...	...	...	...	...	...
Ordnance, B.L. spindles, worm, steel, gear controlling, breech screw, with worm, keep pin, 4 washers and nut	...	...	1	1	...	1	...	1	...	...	...	...	...	...	...	1 to 10
Ordnance, B.L. springs bolt, vent, annular ...	...	...	...	...	...	...	...	...	*a*	...	...	...	...	...	6	...
Ordnance, B.L. springs catch, cam lever steel, spiral ...	...	...	*a*	...	...	...	...	...	*a*	*a*	...	*a*	...	...	6	...
Ordnance, B.L. springs catch, cam lever down, steel, spiral ...	*a*	*a*	...	*a*	*a*	*a*	*a*	*a*	...	...	*a*	...	...	...	6	...
Ordnance, B.L. springs catch, cam lever up, steel flat ...	*a*	*a*	...	*a*	*a*	*a*	*a*	*a*	...	...	...	...	...	...	6	...
Ordnance, B.L. springs clip, carrier ring (steel, flat, retaining carrier ring closed)	*a*	*a*	*a*	*a*	...	...	*a*	*a*	...	...	*a*	...	*a*	*a*	6	...
Ordnance, B.L. springs extractor, lock, electric B, steel, spiral, also for lock, percussion D	*a*	*a*	...	*a*	*a*	*a*	*a*	*a*	...	...	...	...	...	...	5*	...
Ordnance, B.L. springs guide bolt steel, spiral, percussion, lock ...	...	*a*	...	...	...	...	...	...	...	*a*	*a*	*a*	*a*	*a*	6	...
Ordnance, B.L. springs guide bolt lock, electric B, also for lock. percussion D	*a*	*a*	...	*a*	*a*	*a*	*a*	*a*	...	...	...	...	...	...	6*	...
Ordnance, B.L. springs guide for lock, steel, spiral ...	...	...	...	...	...	...	...	...	...	...	*a*	*a*	*a*	*a*	6	...
Ordnance, B.L. springs hammer, steel, flat, percussion lock ...	...	...	*a*	...	...	...	...	...	...	*a*	*a*	*a*	*a*	*a*	6	...
Ordnance, B.L. springs hammer guard, steel. flat, percussion lock ...	...	...	*a*	...	...	...	...	...	...	*a*	*a*	*a*	*a*	*a*	6	...
Ordnance, B.L. springs lanyard bolt, steel, spiral ...	...	...	*a*	...	...	...	...	...	...	*a*	*a*	*a*	*a*	*a*	6	...
Ordnance, B.L. springs latch, carrier ring, steel, spiral, retaining carrier ring, open	...	...	*a*	*a*	...	...	*a*	*a*	...	...	*a*	...	*a*	*a*	6	...

Digitized by Google

Ordnance, B.L.																																
lever, retaining, carrier	closed, steel	flat, with 2 screws	...	...	...	...	...	...	...	...	...	...	...	...	...	...	...	...	...	...	...	...	...	...	...	...	...	...	...	...	...	...
		spiral	...	...	...	...	...	...	...	...	...	...	...	...	...	...	...	...	...	...	...	...	...	...	...	...	...	...	...	...	...	...
	open, steel	flat, with 2 fixing screws	...	...	...	...	...	...	...	...	...	...	...	...	...	...	...	...	...	...	...	...	...	...	...	...	...	...	...	...	...	...
		flat	...	...	...	...	...	...	...	...	...	...	...	...	...	...	...	...	...	...	...	...	...	...	...	...	...	...	...	...	...	...
springs	needle, steel, spiral ...		...	...	...	...	...	...	...	...	...	...	...	...	...	...	...	...	...	...	...	...	...	...	...	...	...	...	...	...	...	...
	pawl, pin, steel, spiral, ratchet lever ...		...	...	...	...	...	...	...	...	...	...	...	...	...	...	...	...	...	...	...	...	...	...	...	...	...	...	...	...	...	...
	plunger for catch, steel, spiral, cam lever		...	...	...	...	...	...	...	...	...	...	...	...	...	...	...	...	...	...	...	...	...	...	...	...	...	...	...	...	...	...
	retaining hammer, steel, annular ...		...	...	...	...	...	...	...	...	...	...	...	...	...	...	...	...	...	...	...	...	...	...	...	...	...	...	...	...	...	...
	safety, steel, spiral		...	...	...	...	...	...	...	...	...	...	...	...	...	...	...	...	...	...	...	...	...	...	...	...	...	...	...	...	...	...
	stop	breech screw, steel, spiral, in carrier...	...	...	...	...	...	...	...	...	...	...	...	...	...	...	...	...	...	...	...	...	...	...	...	...	...	...	...	...	...	...
		lever, steel, flat, in breech screw	...	...	...	...	...	...	...	...	...	...	...	...	...	...	...	...	...	...	...	...	...	...	...	...	...	...	...	...	...	...
		pin, steel, spiral, in breech screw	...	...	...	...	...	...	...	...	...	...	...	...	...	...	...	...	...	...	...	...	...	...	...	...	...	...	...	...	...	...
		retaining carrier, open	...	...	...	...	...	...	...	...	...	...	...	...	...	...	...	...	...	...	...	...	...	...	...	...	...	...	...	...	...	...
	striker	lock, percussion D... ...	...	...	...	...	...	...	...	...	...	...	...	...	...	...	...	...	...	...	...	...	...	...	...	...	...	...	...	...	...	...
		percussion lock	...	...	...	...	...	...	...	...	...	...	...	...	...	...	...	...	...	...	...	...	...	...	...	...	...	...	...	...	...	...
	trigger	lock, percussion D... ...	...	...	...	...	...	...	...	...	...	...	...	...	...	...	...	...	...	...	...	...	...	...	...	...	...	...	...	...	...	...
		steel, flat, percussion lock ...	...	...	...	...	...	...	...	...	...	...	...	...	...	...	...	...	...	...	...	...	...	...	...	...	...	...	...	...	...	...
	vent, axial, steel, spiral ...		...	...	...	...	...	...	...	...	...	...	...	...	...	...	...	...	...	...	...	...	...	...	...	...	...	...	...	...	...	...
strikers, steel	lock, percussion D, with spindle and keep pin ...		...	...	...	...	...	...	...	...	...	...	...	...	...	...	...	...	...	...	...	...	...	...	...	...	...	...	...	...	...	...
	percussion lock		...	...	...	...	...	...	...	...	...	...	...	...	...	...	...	...	...	...	...	...	...	...	...	...	...	...	...	...	...	...
studs	catch	No. 1	retaining carrier	open...	...	...	...	...	...	...	...	...	...	...	...	...	...	...	...	...	...	...	...	...	...	...	...	...	...	...	...	...
		No. 2		closed	...	...	...	...	...	...	...	...	...	...	...	...	...	...	...	...	...	...	...	...	...	...	...	...	...	...	...	...
	catch, steel	apparatus, withdrawing breech screw			1	1	...	...	...	...	...	...	...	...	...	...	...	...	...	...	...	...	...	...	...	...	...	...	...	...	...	...
		retaining carrier closed (with 1 fixing screw only for 8-inch)			...	...	...	...	...	...	...	...	...	...	...	...	...	...	...	...	...	...	...	...	...	...	...	...	...	...	...	...
	elevating, steel				...	a	...	...	...	...	...	...	...	...	...	...	...	...	...	...	...	...	...	...	...	...	...	...	...	...	1 to 5	...
	steadying, steel, apparatus, withdrawing breech screw				1	1	...	...	...	...	...	...	...	...	...	...	...	...	...	...	...	...	...	...	...	...	...	...	...	...	1 to 5	...
triggers	steel, with axis pin, percussion lock ...				...	...	a	...	...	...	...	...	...	...	...	...	...	...	...	...	...	...	...	...	...	...	...	...	...	...	...	...	...
	lock, percussion D, steel, with axis pin ...				...	a	...	a	...	...	...	...	...	...	...	...	...	...	...	...	...	...	...	...	...	...	...	...	...	...	...	...
trigger-guards, steel, with screw, percussion lock ...					...	...	a	...	a	...	...	...	...	...	...	...	...	...	...	...	...	...	...	...	...	...	...	...	...	...	...	...
vents, axial, with spurn spring, nut and washer steel					...	1	1	1	1	...	...	...	...	...	...	...	...	...	...	...	...	...	...	...	...	...	...	...	...	...	...	...
	with washer				...	...	...	...	...	...	...	...	...	...	...	...	...	...	...	...	...	...	...	...	...	...	...	...	...	...	...	...
	... ...				...	...	...	...	...	...	...	...	...	...	...	...	...	...	...	...	...	...	...	...	...	...	...	...	...	...	...	...

* For each lock.

Digitized by Google

Fittings and Component and Spare Parts for Land Service B.L. Guns (12-inch to 4-inch)—*continued.*

Articles.	Ordnance, B.L. Component Parts. 12-inch, Mark I and IA.	12-inch, Mark VI and VII.	10-inch, Mk. I.	10-inch, Mark II, III.	9·2-inch, Mark I, U.C.	9·2-inch, Mark I, C.	9·2-in., Mk. IV, IV A. U.C., and VI B.	9·2-inch, Mark IV C. VI.	8-inch, Mark VII.	6-inch, Mark II, P.	6-inch, Mark IV and VI.	6-inch, Mk. V.	5-inch, Mark IV and V.	4-inch, Mk. IV.	Spare. Per gun.	To No. of guns or less in a Fort or Battery.
SPECIAL IMPLEMENTS.																
Bolts, eye, breech screw	*a*	*a*	*a*	...	...	...	...	...	...	...	...	...	...	...	...	1 per work
Levers, lengthening, cam lever	...	...	...	...	...	...	...	...	1	...	1	1	...	...	...	
Tommies	...	...	...	1	1	1	1	1	...	...	...	1	...	...	...	
Trays { cartridge { bronze, loading ...	...	...	...	...	...	...	...	...	1	...	...	...	...	...	1 to 5	
{ wood and bronze, loading ...	...	...	...	...	...	...	...	...	1	...	...	1	...	...	1 to 2	
{ shot loading	1	1	...	1	1	1	1	...	...	1	1	1	...	...	1 to 2	
a	...	...	...	...	...	...	...	...	1	...	...	...	...	...	...	
b	...	...	...	...	...	...	...	...	1	...	...	...	...	...	...	
c	...	...	...	...	...	...	...	...	1	...	...	...	...	...	...	
d	...	...	...	...	...	...	...	...	1	...	...	...	...	...	...	
bracket, elevating, steel, for fixing screws	...	...	...	...	...	...	...	...	1	...	...	1	...	...	1 to 5	
Wrenches breech action, percussion lock ...	...	...	1	...	...	...	...	...	...	1	1	1	1	1	...	
breech mechanism	...	...	...	...	...	...	...	...	1	...	...	...	...	...	...	
end plate, steel, for fixing screws ...	...	...	...	...	...	...	...	...	...	...	...	1	...	...	...	
firing mechanism	...	1	...	1	1	1	1	1	...	...	1	...	...	...	1 to 5	
nut, vent, steel, axial vent	1	1	1	1	1	1	1	1	1	...	1	...	...	...		
pivot, elevating	...	...	...	...	...	...	...	...	1	...	...	...	...	...		
stud and screw, No. 1, steel, in 6 parts (A to F), with tommy; for elevating pivots and fixing screws	1	1	1	1	1	1	1	1	...	...	...	...	...	...		

Digitized by Google

| Appurtenances. | | |

FITTINGS AND COMPONENT AND SPARE PARTS

Articles.	Ordnance, R.M.L. Guns. 12·5-in., Mark I.	12·5-in., Mark II.	12-in., 35 ton.	12-in., 25 ton.	11-in.	10·4-in.	10-in.	9-in.	8-in.	7-in., 7 ton.
Vocabulary Section V. (1).										
Clamps, tangent sight { A	3	3	3	...	...	...	2	...	2	2
B	...	...	...	...	...	...	...	...	...	...
C	...	...	...	2	2	...	...	2	...	...
D	...	...	...	...	...	...	...	...	...	...
special	...	...	...	...	...	2	...	...	...	...
Derricks, loading, muzzle, bronze, with band, 2 hinge screws, and fixing screws	1	...	1	...	1*	...	1	1	...	...
Extractors, tube { V.M.	...	1	...	...	...	1	...	...	...	...
F special	...	*a*	...	...	...	...	...	...	...	...
Lanyard-guides, wrought-iron guns	1	...	1	1	1	...	1	1	1	1
Ordnance, R.M.L. { Fittings.										
bolts { cascable elevating, with washer and keep pin	...	...	...	...	...	...	...	...	...	...
eye, trunnion	...	...	...	...	...	...	...	...	...	*p*2†
boxes, slide, in 3 parts	...	...	...	...	...	1	...	...	...	...
brackets { arc, graduated, with fixing screws, bolt, washer, and keep pin	...	...	...	...	...	...	...	...	...	...
fore sight with fixing screws	...	...	...	...	...	2	...	...	...	...
tangent sight	...	...	...	...	...	2	...	...	...	...
cascables, slinging	...	*b*	...	...	...	*b*	...	...	...	...
collars, cascable, elevating (2 to a set) ...	...	...	...	...	...	...	...	‡2†	...	...
contacts, electric, aluminium, with insulated bush, case, 2 washers, and nut, cylinder for contact, and spiral spring, bracket, insulating plate, and 2 fixing screws with insulating bushes, socket for lead, with lead and cap	...	...	...	...	...	1	...	...	...	...
discs, pad obturating { adjusting	...	...	...	...	...	2	...	...	...	...
protecting (2 to a set, front and rear)	...	...	...	...	...	1	...	...	...	...
holders { tube, with extractor and spring vent, axial (with cam lever, hinge bolt, set screw, and link)	...	3	...	...	...	...	...	...	...	...
	...	...	...	...	...	1	...	...	...	...

* Mark II. gun.
† When mounted on counterweight carriage Mark II only.
‡ 1 left and 1 right.

Digitized by Google

FOR LAND SERVICE R.M.L. GUNS AND HOWITZERS.

Ordnance, R.M.L.												Remarks.
Guns.								Howitzers.				
7-in., 6½ ton.	6·6-in.	80-pr.	64-pr., 71 cwt.	64-pr., 64 cwt.	64-pr., 58 cwt.	40-pr.	25-pr.	8-in., 70 cwt.	8-in., 46 cwt.	6·6-in.	6·3-in.	
2	...	...	...	...	...	...	...	...	...	...	...	
...	2	2	2	2	...	...	...	2	1	2	1	1 to 10 or less number of clamps of the same nature.
...	...	...	...	...	...	...	...	...	...	...	...	
...	...	...	...	...	...	2	2	...	...	...	...	
...	...	...	...	...	...	...	...	...	...	...	...	
...	...	...	...	...	...	...	...	...	...	...	...	The hinge screws of the 12-in. 35 ton and 11-in. have loops. 2 of the fixing screws of the 12·5-in. and 10-in. have loops. Derricks are only required for guns mounted in open works, and not behind shields.
...	...	...	...	...	...	...	...	...	...	...	...	2 per gun spare.
...	...	...	...	...	...	...	...	...	...	...	...	*a* 1 to every 5 guns spare.
1	...	1	1	1	1	...	...	...	...	...	...	
...	...	...	...	...	...	...	1	...	...	...	...	
...	...	...	...	...	*p*2†	...	...	...	...	...	...	*p* 1 to every 5 guns spare.
...	...	...	...	...	...	...	...	...	...	...	...	1 to 5 spare.
1*i*	...	...	...	...	...	...	...	...	...	...	...	*i* When mounted on wrought-iron sliding garrison carriage.
...	...	2‡	2‡	...	1	...	...	...	...	...	...	
...	...	...	...	...	...	...	...	...	...	...	...	
...	...	...	...	...	...	...	...	...	...	...	...	*b* 1 per fort.
...	...	...	...	...	...	...	...	...	...	...	...	
...	...	...	...	...	...	...	...	...	...	...	...	1 per gun spare.
...	...	...	...	...	...	...	...	...	...	...	...	2 per gun spare.
...	...	...	...	...	...	...	...	...	...	...	...	3 per gun spare.
...	...	...	...	...	...	...	...	...	...	...	...	
...	...	...	...	...	...	...	...	...	...	...	...	1 to every 5 guns spare.

NOTE.—Fixing screws are supplied in the proportion of 1 to every 5 or less number of screws of the same nature per gun. 1 spare gun or howitzer will be allowed, if available, for 20 pieces or less of the same nature in each district abroad.

Digitized by Google

Fittings and Component and Spare Parts for

Articles.	Ordnance, R.M.L. Guns. 12·5-in., Mark I.	12·5-in., Mark II.	12-in., 35 ton.	12-in., 25 ton.	11-in.	10·4-in.	10-in.	9 in.	8-in.	7-in., 7 ton.
Ordnance, R.M.L. — levers, cam	...	...	...	...	...	*a*	...	...	...	...
locks, electric, steel, consisting of frame with contact, and terminal with insulating bushes and nut, guide bolt and spiral spring, earth terminal with nut, and extractor (in two parts) with spiral spring	...	...	...	...	...	1	...	...	...	...
pads, obturating	...	...	...	...	...	1	...	...	...	...
plates — elevating — with pivot, keep pin, and fixing screws	2§	2§	2‖	2‡	2‡	1	‡2*n*	2‡	2‡	2‡
plates — elevating — with washer, retaining screw, and fixing screws	...	...	...	...	...	...	...	...	...	...
plates — elevating — counterweight, with bolt, keep pin, washer, and fixing screws, carriage, Mark II.	...	...	...	...	...	...	...	2†	...	1†
plates — elevating — overbank carriage, with bolt, keep pin, washer, and fixing screws	...	...	...	...	...	...	...	...	...	...
plates — index, with reader, yard scale plate, and fixing screws	1	...	1	1	1	...	1	1	...	...
plates — trunnion	...	...	...	...	...	...	...	1†	...	1†
screws — bracket — arc, graduated preserving	...	...	...	...	...	...	...	...	...	...
screws — bracket — fore sight, preserving	...	...	...	...	...	16	...	...	...	...
screws — bracket — reflecting sight, preserving — upper	...	...	...	...	...	...	...	4†	...	3†
screws — bracket — reflecting sight, preserving — fore	...	...	...	...	...	...	...	...	...	4*c*
screws — bracket — reflecting sight, preserving — hind	...	...	...	...	...	...	...	...	...	3*c*
screws — eye-bolt, trunnion, preserving	...	...	...	...	...	...	...	...	...	2†
screws — plate — elevating, preserving	12§	12§	8	8	8	4	8	8	8	8*o*
screws — plate — elevating, preserving, counterweight, carriage	...	...	...	...	...	...	...	...	...	...
screws — plate — elevating, preserving, overbank, carriage	...	...	...	...	...	...	...	...	...	...
screws — plate — trunnion — fixing	...	...	...	...	...	...	...	...	...	...
screws — plate — trunnion — preserving	...	...	...	...	...	...	...	...	...	...
screws — shutter frame, preserving	...	6	...	...	...	...	...	...	...	...
screws — stud, trunnion, preserving	...	...	...	...	...	...	...	2†	...	...
shutters, consisting of frame with 6 fixing screws, spring retaining wires, with 2 fixing screws, guide pulley with axis pin; shutter, with hinge bolt and 2 fixing screws, 2 latches, with 2 studs, and 2 spiral springs, handle with 2 pivot pins, and 2 links actuating latches, wheel-lanyard guide with pulley, axis pin, hinge bolt, flat spring, fixing screw, chain, and eye-bolt; socket supporting vent with 4 fixing screws, guide for tube holder, 1 electric shutter plug, and 1 friction shutter plug	...	1	...	...	...	...	...	...	...	...

† When mounted on counterweight carriage Mark II only. ‡ 1 left and 1 right.
§ 1 lower, 1 upper, and 1 right in addition, when mounted for small port only.
‖ 1 lower and 1 upper.

Digitized by Google

Land Service R.M.L. Guns and Howitzers—*continued.*

Ordnance, R.M.L.												Remarks.
Guns.								Howitzers.				
7-in., 6½ ton.	6·6-in.	80-pr.	64-pr., 71 cwt.	64-pr., 64 cwt.	64-pr., 58 cwt.	40-pr.	25-pr.	8-in., 70 cwt.	8-in., 46 cwt.	6·6-in.	6·3-in.	
...	...	...	...	...	...	...	...	...	...	...	...	*a* 1 to every 2 guns spare.
...	...	...	...	...	...	...	...	...	...	...	...	And 1 per gun spare.
...	...	...	...	...	...	...	...	...	...	...	...	And 3 per gun spare.
2‡	...	...	...	1	...	1	1	1	1	1	1	1 pivot spare to every 10 plates of each nature, and 2 spare keep pins per gun.
...	2‡	...	...	...	...	...	...	...	...	...	...	
...	...	...	...	...	1†	...	...	...	...	...	...	1 keep pin per gun spare.
...	...	...	...	...	...	2*p*	2*p*	...	...	...	...	*p* 2 keep pins per gun spare. 1 breech and 1 muzzle, fitted with scale plate, right side only.
...	...	...	...	...	...	...	...	...	...	...	...	
...	2‡	...	...	...	1†	...	...	...	...	...	...	
4*i*	...	...	...	...	...	...	...	...	...	...	...	*i* When mounted on wrought-iron sliding garrison carriage.
...	...	4	4	...	2	...	...	...	...	...	...	
...	...	...	...	...	1	...	...	...	...	...	...	
...	...	...	...	...	...	...	...	...	...	...	...	
...	...	...	...	...	...	...	...	...	...	...	...	
...	...	...	...	...	2†	...	...	...	...	...	...	
8	8	...	...	4	...	4	3	4	3	4	4	
...	...	...	...	...	6	...	...	...	...	...	...	
...	...	...	...	...	...	8	8	...	...	...	...	
...	2‡	...	...	...	...	...	...	...	...	...	...	1 left and 1 right to every 5 guns spare.
...	2	...	...	...	...	...	...	...	...	...	...	
...	...	...	...	...	...	...	...	...	...	...	...	
...	...	...	...	...	...	...	...	...	...	...	...	
...	...	...	...	...	...	...	...	...	...	...	...	4 springs for latches, and 1 wheel lanyard guide complete to each gun spare.

c Mark I. carriage only.
n Special plates are required for small port mounting.
o When mounted in Mark I. counterweight carriage 6 extra.

Digitized by Google

Fittings and Component and Spare Parts for

Articles.	Ordnance, R.M.L. Guns. 12·5-in., Mark I.	12·5-in., Mark II.	12-in., 35 ton.	12-in., 25 ton.	11-in.	10·4-in.	10-in.	9-in.	8-in.	7-in., 7 ton.
Ordnance, R.M.L. sockets, vent, axial, with 3 fixing screws	...	...	...	...	...	1	...	...	...	...
Ordnance, R.M.L. studs, trunnion	...	2	...	...	...	...	...	2*	...	...
Ordnance, R.M.L. vents, axial, with washer, nut, and double key	...	1	...	...	...	...	...	...	...	...
SPECIAL IMPLEMENTS.										
Rimers, vent, axial	...	1	...	...	...	1	...	...	...	...
Screws lanyard guide, preserving	1	...	1	1	1	...	1	1	1	1
Screws pin, friction tube, preserving ...	2	...	2	2	2	...	2	2	2	2
Sights fore B	...	...	...	...	...	2	...	...	...	...
Sights fore D	...	...	...	...	...	...	...	...	...	...
Sights fore G	3	3	3	...	...	...	...	...	...	...
Sights fore H	...	...	...	2	2	...	2	2	2	...
Sights fore J	...	...	...	...	...	...	...	...	...	2
Sights fore L	...	...	...	...	...	...	...	...	...	...
Sights centre	...	...	...	...	...	...	...	...	...	...
Sights hind, centre	...	...	...	...	...	...	...	...	...	...
Sights muzzle	...	...	...	...	...	...	...	...	...	...
Sights reflecting, counter-weight carriage, Mark I. with fixing screws, fore	...	...	...	...	...	...	...	...	...	1
Sights reflecting, counter-weight carriage, Mark I. with fixing screws, hind	...	...	...	...	...	...	...	...	...	1
Sights reflecting, counter-weight carriage, Mark II. with graduated bar and fixing screws, lower	...	...	...	...	...	...	...	1	...	1
Sights reflecting, counter-weight carriage, Mark II. with graduated bar and fixing screws, upper	...	...	...	...	...	...	...	1	...	1
Sights reflecting, fore	2*m*	2*m*	...	...	...	...	...	...	...	...
Sights reflecting, hind, with tangent scale bar and clamp bracket with reflector	2*m*	2*m*	...	...	...	...	...	...	...	...
Sights tangent	3	3	3	2	2	2	2	2	2	2
Tommies, contact	...	...	...	...	...	1	...	...	...	...

* When mounted on counterweigh carriage Mark II only.

Digitized by Google

Land Service R.M.L. Guns and Howitzers—*continued.*

Ordnance R.M.L.												Remarks.
Guns.								Howitzers.				
7-in., 6¼ ton.	6·6-in.	80-pr.	61-pr., 71 cwt.	64-pr., 64 cwt.	64-pr., 58 cwt.	40-pr.	25-pr.	8-in., 70-cwt.	8-in., 46 cwt.	6·6-in.	6·3-in.	
...	...	...	...	...	...	...	...	...	...	...	...	
...	...	...	...	...	...	...	...	...	...	...	...	
...	...	...	...	...	...	...	...	...	...	...	...	1 spare per gun, and 12 washers spare per gun.
...	...	...	...	...	...	...	...	...	...	...	...	1 spare to every 2 guns.
1	...	1	1	1	1	...	...	...	...	...	...	
2	...	2	2	2	2	...	...	...	...	...	...	
...	...	...	...	...	...	2	2	...	...	...	...	
...	2	...	...	...	...	...	...	...	...	...	...	
...	...	...	...	...	...	...	...	...	...	...	...	
...	...	...	...	...	...	...	...	...	...	...	...	
2	...	...	...	...	...	...	...	...	...	...	...	1 spare to every 10 or less number of sights of the same nature.
...	...	2	2	2	...	...	...	...	...	...	...	
...	...	...	...	...	1	...	...	...	...	...	...	
...	...	...	...	...	1	...	...	...	...	...	...	
...	...	...	...	...	1	...	...	...	...	...	...	
...	...	...	...	...	...	...	...	...	...	...	...	
...	...	...	...	...	...	...	...	...	...	...	...	1 glass mirror of each nature per gun spare. 1 mirror frame and bracket, &c., complete of each nature to every 10 or less number of guns spare.
...	...	...	...	...	1	...	...	...	...	...	...	
...	...	...	...	...	1	...	...	...	...	...	...	
...	...	...	...	...	...	...	...	...	...	...	...	1 spare to every 10 or less number of sights of the same nature.
...	2	...	...	...	...	...	...	...	...	...	...	1 glass mirror of each nature per gun and 1 mirror with frame complete, to every 10 or less number of guns when sighted upon both sides, spare.
2	2	2	2	2	...	2	2	...	...	...	...	1 spare to every 10 or less number of sights of the same nature.
...	...	...	...	...	...	...	...	...	...	...	...	

m When mounted small port only.

Digitized by Google

FITTINGS AND COMPONENT AND SPARE PARTS FOR LAND SERVICE B.B.L. AND S.B.L. GUNS.

Ordnance, B.B.L.	Articles.	Land Service.	Ordnance, B.B.L. 7-in., 82 cwt. Fitted for Counter-weight Carriage, Mark II.	Ordnance, B.B.L. 7-in., 82 cwt. Fitted for Converted M.L. 6¾-ton Naval Carriage.	Ordnance, B.B.L. 7-in., 12 cwt., Land Service.	Ordnance, B.B.L. 40-pr. 33 cwt.	Ordnance, B.B.L. 40-pr. Side Closing.	Ordnance, B.B.L. 20-pr., 16 cwt.	Ordnance, B.B.L. 32-pr. S.H., 42 cwt. Ord.1 B.L.	Remarks.
	Vocabulary Section V. (1).									
	Clamps, tangent sight { A ... ... C	2	2	2	...	2	2	...	...	1 spare to every 10 or less number of clamps of the same nature.
	FITTINGS.									
	Bands, elevating, with pivot and keep pin ...	...	...	...	...	1*	...	...	...	1 pivot to every 10 or less number of guns, spare.
	Blocks, breech, with obturating ring ...	...	...	...	...	...	1†	...	...	2 spare to each gun and 2 copper rings extra, per gun.
	Bolts, eye, trunnion	1	...	...	...	...	2‡	...	...	1 to every 5 guns, spare.
	Brackets, guide, upper with 3 fixing screws, lower with 5 fixing screws, stud stop (movable) with spiral spring	...	...	...	...	...	...	...	...	1 upper and 1 lower, spare, to every 10 or less number of guns; also 2 spiral springs and 2 fixing screws per gun, spare.
	Bushes, breech	§	§	§	§	‖	...	1	...	1 keep pin per gun, spare.
	Eyes, elevating, with bolt, washer, and keep pin	1	1	1	1	...	...	...	...	1 spare to every 20-pr. and 2 spare to every 40-pr. and 7-in. gun, and 2 rings, copper, extra per gun.
	Pieces, vent { with preserving screw ... ... with preserving screw and obturating ring ... with obturating ring ...	...	—	—	...	1	...	...	...	

Digitized by Google

(EQ. R.)

Ordnance, R.B.L.

Plates	elevating counterweight carriage, with pivot, keep pin and 4 fixing screws	...	...	2***	...	...	...	...	2 pivots to every 10 or less number of plates of the same nature, and 1 keep pin to each plate, spare.
	elevating counterweight carriage, Mark II., with bolt, washer, keep pin, and 5 fixing screws	...	1	...	...	...	...	...	1 keep pin per gun, spare.
	hinge, for carrier, with 2 fixing screws and hinge pin	...	...	...	...	...	...	1	1 spare to every 10 or less number of guns.
	trunnion	...	1	...	1c	...	...	...	1 fixing screw per gun, spare.
Saddles, with 6 fixing screws ...		...	1	1	1c	...	8	...	
Screws	bracket, guide, preserving ...	...	...	...	...	...	...	1a	1 breech screw, complete, spare, to every 10 or less number of guns; *a* also 1 tappet ring and 1 lever keep ring per gun, spare; *b* also 1 clip retaining lever, with axis pin and 2 flat springs, per gun, spare.
	breech { with lever, 2 keep pins, and tappeting	1a	1a	1a	1a	1a	...	...	
	breech { with lever, 2 keep pins, tappeting, and indicator ring	1a	1a	1a	1a			1b	
	breech { with lever, 4 fixing screws, clip retaining lever, axis pin, and flat spring	...	...	...	...	...	...		
	eyebolt, trunnion preserving ...	...	2	...	...	...	...	...	
	plate, elevating, preserving ...	...	...	8	...	...	6	...	
	plate, elevating, counterweight carriage, preserving ...	...	5	...	...	...	...	...	
	set, tangent sight, with { left...	...	...	...	...	...	1	...	
	chain and eyebolt { right	...	...	...	...	...	1	...	
	sight { fore, preserving ...	...	...	...	...	...	...	2	
	sight { reflecting, upper, preserving ...	...	3	...	...	...	...	...	
Sockets, sight, tangent, with set screw ...		...	...	2	...	...	...	...	2 spiral springs per gun, spare.
Studs, retaining breech block, with releasing lever, axis pin, and spiral spring		...	...	...	...	1	...	...	

* When mounted on garrison sliding carriage.

† For drill purposes a drill breech block is issued.

‡ 1 upper and 1 ower.

§ Iron, 1 set per gun.

‖ Copper, 2 per gun.

¶ The service vent piece is not to be used during drill, drill vent pieces being issued for that purpose.

** 1 left and 1 right.

c. 4 fixing screws only.

Digitized by Google

Fittings and Component and Spare Parts for Land Service R.B.L. and S.B.B.L. Guns—*continued.*

	Articles.	Ordnance, R.B.L.							Remarks.
		Land Service.	7-in., 82 cwt.			40-pr.		32-pr. S.B., 42 cwt. Ord.'s B.L.	
			Fitted for Counter-weight Carriage, Mark II.	Fitted for Con-verted M.L. 6½-ton Naval Carriage.	7-in., 72 cwt., Land Service.	35 cwt.	Side Closing.	20-pr., 16 cwt.	
	SPECIAL IMPLEMENTS.								
Ordnance	R.B.L., Levers, vent piece { lifting	1	1	1	1	...	...	...	
	R.B.L., Levers, vent piece { releasing	1	1	1	1	...	...	...	
	FITTINGS.								
	S.B.B.L. Carriers, bronze, with cover, 4 fixing screws, lever retaining carrier, axis pin, flat spring, and 2 fixing screws	...	...	...	...	...	...	1	1 spare to every 10 or less number of guns, and 2 springs of each nature per gun.
	S.B.B.L. Stop for breech screw, with spiral spring, and lever								
	S.B.B.L. Directing stop, with axis pin								
	S.B.B.L. Cups, obturating, with spindle, spring, and 2 nuts	...	...	...	...	...	...	3*	
	S.B.B.L. Studs, catch, retaining carrier closed	...	...	...	...	...	...	1	1 spare to every 10 or less number of guns.
	Levers, releasing, breech screw (wood)	...	...	...	...	...	...	1	1 per gun, spare.

Digitized by Google

Sights	R.B.L.	fore, F	...	...	...	...	2	2	2	...	2	2	2	...	1 spare to every 10 or less number of sights of the same nature.
		fore ...	...	...	...	...	...	...	2†	...	...	...	...	...	
		reflecting weight Mark II	counter-carriage,	lower, with graduated bar and fixing screws	...	...	...	1	...	...	...	...	...	...	1 spare glass mirror of each nature per gun, and 1 mirror with frame complete (without bar) to every 10 or less number of guns.
				upper, with fixing screws	...	...	1	...	...	...	...	...	...	...	
	S.B.B.L.	tangent	...	...	...	...	2	2	2	...	2	2	2	...	1 spare to every 10 or less number of sights of the same nature.
		...	...	...	...	...	...	...	...	...	...	...	...	1	

* 1 large and 2 small.

† Screw.

NOTE. 1 spare gun will be allowed, if available, for 20 pieces or less of the same nature in each district abroad.

Digitized by Google

SPARE B.L. CARRIAGES AND COMPONENT

Articles	12-inch.	10-inch.					9·2-	
		Disappearing.		Barbette.			Disappearing.	
				Mark I.				
	Garrison.	Mark I.	Mark II.	C.	D.	Mark II.	Mark I.	Mark II.
Arcs, indicator, lever, cross shaft, raising valve ... with collars and nuts ...	...	...	...	...	...	...	...	...
Axles — roller — iron, with keys ...	...	1	...	...	...	...	1	...
iron, with nuts ...	...	20	...	...	...	...	18	...
steel ...	...	...	...	...	...	...	...	...
steel, with long nuts ...	...	...	...	...	...	...	...	...
steel, with medium nuts ...	...	...	...	...	...	...	...	...
steel, with short nuts ...	...	...	...	...	...	...	...	...
steel, with centre and front screws, flat head ...	...	...	...	2	2	...	...	...
steel, with centre and front screws, round head ...	...	...	...	2	2	...	...	...
steel, with centre and rear screws ...	...	...	...	4	4	...	...	...
steel, with long screws ...	...	...	...	2	2	...	...	...
steel, with short screws ...	...	...	...	...	...	8	...	...
steel, with screws ...	...	...	...	...	...	6	...	...
steel, with screws ...	14	...	...	...	...	...	...	...
Axles — truck — iron... left ...	...	...	...	...	...	...	...	...
iron... right ...	...	...	...	...	...	...	...	...
steel, with key ...	...	...	4	...	...	...	...	4
Axletrees, steel ...	...	...	...	...	...	...	...	...
Bands, elevating; removable, with pivots, wedges, and keep pins ...	...	1	1	1	1	1	1	1
iron, axle, roller, with screws ... inside ...	14	...	...	...	...	14	...	...
iron, axle, roller, with screws ... outside ...	14	...	...	...	...	14	...	...
lowering pump, with bolts or screws inside ...	...	...	...	...	...	...	...	...
lowering pump, with bolts or screws outside ...	...	...	...	...	...	...	...	...
hydraulic buffer...	...	...	...	...	...	...	...	...
Bearings — metal — axle, inside ...	...	...	...	4	4	...	...	...
roller, outside ...	...	...	...	6	6	...	...	...
pinion, elevating gear, 1st motion	...	...	...	...	...	...	...	...
spindle, elevating gear, 2nd ,,	...	...	...	2	2	...	...	...
spindle, gear indicator ...	...	...	...	1	1	...	...	...
traversing, inside ...	...	...	...	...	...	...	...	...
traversing, outside ...	...	...	...	...	...	...	...	...
trunnion	2	...	...	2	2	...	...	...
spindle pump, running back	...	...	...	1	1	...	...	...
shaft, cross, with bolts — lowering pump — inside inner shaft	...	1	...	...	...	...	1	...
shaft, cross, with bolts — lowering pump — outside ,, ,,	...	1	...	...	...	...	1	...
shaft, cross, with bolts — lowering pump — inside outer ,,	...	1	...	...	...	...	1	...
shaft, cross, with bolts — lowering pump — outside ,, ,,	...	1	...	...	...	...	1	...
shaft, cross, with bolts — raising valve — inside ...	...	1	...	...	...	...	1	...
shaft, cross, with bolts — raising valve — outside ...	...	1	...	...	...	...	1	...

* Mark I. and Mark Ia. carriages are the same in all respects as regards component parts, but Mark Ia. is of slightly different dimensions to Mark I. to suit the Mark I. gun.

The Mark I. Gun is fitted with elevating plates instead of an elevating band; α denotes the parts which differ in dimensions, and in demanding these parts the mark of the carriage must be quoted to prevent mistakes.

Digitized by Google

AND SPARE PARTS FOR THE SAME.

6-inch.		8-inch.	6-inch Disappearing.						6-inch.		5-inch.	4-inch.	Proportion of Spare.			
Barbette.		Barbette.	Mark II. P gun.		Mark IV. gun.		Mark V. gun.		Vavasseur Central Pivot.	Barbette Central Pivot.	Siege, 6-ft. parapet.	Siege, 6-ft. parapet.	District. Per 20 guns, or any lesser No. not less than 10 of each nature.	Detached group of Sub-Districts. Per 10 guns, or lesser No. of each nature.	Sub-District. Per 10 guns, or less No. of each nature.	Fort or Battery. Per 10 guns, or less No. of each nature.
Mark I. and IA.*	Mark II.	Mark I.	Mark II.	Mark IV.	Mark II.	Mark IV.	Mark I.	Mark III.								
...	...	...	1	1	1	1	...	1	...	...	...	...	...	...	...	...
...	...	...	...	...	...	...	...	...	...	...	...	...	...	...	...	...
...	...	...	...	...	...	...	...	...	...	...	...	...	...	...	...	...
...	...	8	16	16	16	16	...	16	...	...	...	...	...	...	...	1†
...	...	...	...	...	...	...	...	...	...	2 &	...	...	...	...	...	...
...	...	...	...	...	...	...	...	...	...	4	...	...	...	...	...	...
2	...	...	...	...	...	...	...	...	...	...	...	...	...	...	...	1
2	...	...	...	...	...	...	...	...	...	...	...	...	...	...	...	1
4	...	...	...	...	...	...	...	...	...	...	...	...	...	...	...	1
2	...	...	...	...	...	...	...	...	...	...	...	...	...	...	...	1
...	8	...	...	...	...	...	...	...	...	...	...	...	...	...	...	1
...	6	...	...	...	...	...	...	...	...	...	...	...	...	...	...	1
...	...	...	...	...	...	...	...	...	...	...	...	...	...	...	...	1
...	...	...	...	...	...	...	2	...	...	...	...	...	...	...	...	...
...	...	...	...	...	...	...	2	...	...	...	...	...	...	...	...	...
...	...	...	...	...	...	...	...	...	...	...	...	...	...	...	...	...
...	...	...	...	...	...	...	...	...	...	...	...	...	...	...	...	...
1‡	...	1	1	1	1	1	1	1	1	1	1	1	...	...	...	...
...	14	8	...	...	...	...	...	...	...	...	...	...	...	...	...	...
...	14	8	...	...	...	...	...	...	...	...	...	...	...	...	...	...
...	...	...	1	1	1	1	...	1	...	...	...	...	...	...	...	...
...	...	...	1	1	1	1	...	1	...	...	...	...	...	...	...	...
...	...	...	...	...	...	...	...	...	...	4	2	2	...	...	...	...
4	...	...	...	...	...	...	...	...	...	4	...	...	...	...	...	...
6	...	...	...	...	...	...	...	...	...	6	...	...	...	...	...	...
...	...	1	...	...	...	...	...	...	...	...	...	...	...	...	...	...
2	...	1	...	...	...	...	...	...	...	...	...	...	...	...	...	...
1	...	...	...	...	...	...	...	...	...	...	...	...	...	...	...	...
...	...	...	...	...	...	...	4	...	...	...	...	...	...	...	...	...
...	...	...	...	...	...	...	4	...	...	...	...	...	...	...	...	...
a2	...	2	...	...	...	...	...	...	...	2	...	...	...	...	...	...
1	...	...	...	...	...	...	...	...	...	...	...	...	...	...	...	...
...	...	...	...	...	...	...	...	...	...	...	...	...	...	...	...	...
...	...	...	...	...	...	...	...	...	...	...	...	...	...	...	...	...
...	...	...	...	...	...	...	...	...	...	...	...	...	...	...	...	...
...	...	...	...	...	...	...	...	...	...	...	...	...	...	...	...	...
...	...	...	...	...	...	...	...	...	...	...	...	...	...	...	...	...

† For 8-in. barbette.
‡ For Mark I. only.

Digitized by Google

Spare B.L. Carriages and Component

Articles.			12-inch.	10-inch.					9·2-inch.	
				Disappearing.		Barbette.			Disappearing.	
			Garrison.	Mark I.	Mark II.	Mark I. C.	Mark I. D.	Mark II.	Mark I.	Mark II.
Brackets	Bearings	pinion, spindle, elevating, 1st motion	...	...	...	...	...	...	...	...
		raising inside	...	...	...	...	...	...	...	...
		raising valve outside	...	...	...	...	...	...	...	...
		metal, elevating, 2nd motion	...	...	...	...	...	...	...	...
		shaft cross main, with cap and bolts	...	...	2	...	...	...	...	2
		metal, spindle valve by-pass, with screws	...	...	1	...	...	...	...	1
		steel, axletree	...	...	...	...	...	...	...	...
	Blocks, wood, housing		...	...	...	...	...	...	...	...
	Bolts	connecting piston rod, steel, with nut	...	...	...	2	2	...	...	...
		holding down, iron, inner	...	24	...	...	...	...	20	...
		holding down, iron, with nuts outer	...	48	...	...	...	...	40	...
		with nuts assorted sets	...	...	1	...	...	...	...	1
	hydraulic buffer with bolts	front	...	...	...	...	...	...	...	...
		rear	...	...	...	...	...	...	...	...
	iron, with bolts or screws	lever, plunger, pump lowering	...	...	...	...	...	...	...	...
		loading gear roller guide	...	...	1	...	...	...	...	1
		loading gear shaft winch handle	...	...	2	...	...	...	...	2
		loading gear shaft wheel sprocket	...	...	2	...	...	...	...	2
		shaft step sighting left	...	...	...	...	...	...	...	...
		shaft step sighting right	...	...	...	...	...	...	...	...
		traversing gear, inside	...	...	2	...	...	...	...	2
		handle crank outside	...	...	2	...	...	...	...	2
		spindle, second and third motion left	...	...	2	...	...	...	...	2
		spindle, second and third motion right	...	...	2	...	...	...	...	2
		buffer left	...	...	...	...	...	...	...	...
		buffer right	...	...	...	...	...	...	...	...
		bearing, shaft, counterweight, step sighting (automatic release gear)	...	...	...	...	...	...	...	...
	metal, with bolts or screws	elevating, rear	...	...	...	...	...	...	...	...
		pointer	...	...	...	...	...	...	...	...
		spindle worm, elevating bottom	...	...	...	...	...	...	...	...
		spindle worm, elevating top	...	...	...	...	...	...	...	...
		shaft, rear of slide	...	...	...	...	...	...	...	...
	pans, drip, hydraulic buffer, iron, with screws	left	...	1	...	...	...	...	...	...
		right	...	1	...	...	...	...	...	...
	steel	pointer	...	...	...	...	...	...	...	...
		elevator, joint pin	...	2	...	...	...	...	2	...
		shield pillars	...	8	...	...	...	...	8	...
		spindle, pump, running back, with bolts	...	...	...	1	1	...	...	...
		trunnions, recoil cylinder	...	2	...	...	...	...	2	...
		angle, supporting right	...	...	...	...	...	...	...	...
		steps, sighting left	...	...	...	...	...	...	...	...

* See note page 862.

Digitized by Google

and Spare Parts for the same—*continued*.

9·2-inch.			8-inch.	6-inch Disappearing.						6-inch.		5-inch.	4-inch.	Proportion of Spare.			
Barbette.			Barbette.	Mark II. P gun.		Mark IV. gun.		Mark V. gun.		Vavasseur Central Pivot.	Barbette Central Pivot.	Siege, 6-ft. parapet.	Siege, 6-ft. parapet.	District. Per 20 guns, or any lesser No. not less than 10 of each nature.	Detached group of Sub-Districts. Per 10 guns, or lesser No. of each nature.	Sub-District. Per 10 guns, or less No. of each nature.	Fort or Battery. Per 10 guns, or less No. of each nature.
Mark I. and Ia.*	Mark II.	Mark I.	Mark II.	Mark IV.	Mark II.	Mark IV.	Mark I.	Mark III.									
...	...	...	...	1	1	1	1	1	1	...	...	...	...	...	...	...	...
...	...	...	...	1	1	1	1	...	1	...	...	...	...	...	...	...	...
...	...	...	...	1	1	1	1	...	1	...	...	...	...	...	...	...	...
...	...	...	...	2	2	2	2	2	2	...	...	...	...	...	...	...	...
...	...	...	...	...	...	...	...	...	...	...	...	...	...	...	...	...	...
...	...	...	...	...	...	...	...	...	...	...	...	...	...	...	...	...	...
...	...	...	...	...	...	...	...	1	...	...	...	2	2	...	...	...	...
1	...	...	...	...	...	...	...	...	...	...	...	...	...	...	...	...	...
...	...	...	...	...	...	...	...	...	...	...	...	...	...	...	...	...	...
...	...	...	...	...	...	...	...	...	...	...	...	...	...	...	...	...	...
...	...	1	...	...	...	...	...	...	...	...	1	...	...	...	...	...	†
...	...	1	...	...	...	...	...	...	...	...	1	...	...	...	...	...	...
...	...	...	...	...	...	...	1	...	...	...	...	...	...	...	...	...	...
...	...	...	...	...	...	...	...	...	...	...	...	...	...	...	...	...	...
...	...	...	...	...	...	...	...	...	...	...	...	...	...	...	...	...	...
...	...	...	...	...	...	...	...	...	...	...	...	...	...	...	...	...	...
...	...	...	...	1	1	1	1	...	1	...	...	...	...	...	...	...	...
...	...	...	...	1	1	1	1	...	1	...	...	...	...	...	...	...	...
...	...	...	...	...	...	...	...	...	...	...	...	...	...	...	...	...	...
...	...	...	...	...	...	...	...	...	...	...	...	...	...	...	...	...	...
...	...	...	...	...	...	...	...	...	...	...	...	...	...	...	...	...	...
...	...	...	...	...	...	...	...	...	...	...	...	...	...	...	...	...	...
...	...	...	...	...	...	...	...	...	...	...	1	...	...	...	...	...	...
...	...	...	...	...	...	...	...	...	...	...	1	...	...	...	...	...	...
...	...	...	...	2	...	2	...	...	...	...	...	...	...	...	...	...	...
...	...	...	...	...	...	...	...	...	...	1	...	...	...	...	...	...	...
...	...	...	...	1	1	1	1	1	1	...	...	...	...	...	...	...	...
...	...	...	...	...	...	...	...	...	...	1	...	...	...	...	...	...	...
...	...	...	...	...	...	...	...	...	...	...	...	1	1	...	...	...	...
...	...	...	...	...	...	...	...	...	...	...	...	1	1	...	...	...	...
...	...	...	...	...	...	...	...	...	...	1	...	...	...	...	...	...	...
...	...	...	...	...	...	...	...	...	...	...	...	...	...	...	...	...	...
...	...	...	...	...	...	...	...	...	...	...	...	...	...	...	...	...	...
...	...	...	...	...	...	...	...	...	...	1	...	...	...	...	...	...	...
...	...	...	...	...	...	...	...	...	...	...	...	...	...	...	...	...	...
1	...	...	...	...	...	...	...	...	...	...	...	...	...	...	...	...	...
...	...	...	...	...	...	...	...	...	...	...	...	...	...	...	...	...	...
...	...	...	...	1	1	1	1	...	1	...	...	...	...	...	...	...	...
...	...	...	...	1	1	1	1	...	1	...	...	...	...	...	...	...	...

† 1 set for 9·2-in. and 10-in. E. and A.

Digitized by Google

Spare B.L. Carriages and Component

Articles.	12-inch.	10-inch.					9·2-inch.	
		Disappearing.		Barbette.			Disappearing.	
	Garrison.	Mark I.	Mark II.	Mark I. C.	Mark I. D.	Mark II.	Mark I.	Mark II.
Buffers, hydraulic, complete	...	...	...	2	2	...	...	...
Buffers, consisting of two brackets, steel ... 16 elastic pads, 14 plates and 4 spindles with nuts, and pins, iron	...	2	...	...	...	...	2	...
Buffers, consisting of two brackets, steel ... 10 plates, 10 pads, and 4 spindles with nuts	...	...	...	...	...	...	...	...
Buffers, consisting of 2 caps, 8 india-rubber pads, 6 plates, 2 spindles, with nuts and keys	...	...	2	...	...	...	...	2
Buffers, running up, consisting of iron bar, 2 caps, 8 felt pads, 6 plates, 2 spindles with nuts and 2 keys, and 2 hydraulic buffers	...	...	1	...	...	...	...	1
Buffers, consisting of 2 brackets, 12 pads, 10 plates, and 4 spindles with nuts	...	...	...	...	...	...	...	...
Caps, hydraulic buffer ... ... iron ... front	2	...	...	...	...	...	...	...
Caps, hydraulic buffer ... ... iron ... rear	2	...	...	...	...	...	...	...
Caps, hydraulic buffer ... ... metal, rear	...	...	...	2	2	...	...	...
Caps, hydraulic buffer ... ... steel ... left	...	...	...	...	...	...	...	...
Caps, hydraulic buffer ... ... steel ... right	...	...	...	...	...	...	...	...
Capsquares ... iron	...	2	2	...	...	...	2	2
Capsquares ... metal	...	...	...	...	...	...	...	...
Capsquares ... steel	2	...	...	2	2	...	...	...
Carriages, body, without fittings ...	1	1	1	1	1	1	1	1
Catches, iron, securing, with bracket pins, collars and set bolt	...	2	...	...	...	...	2	...
Chains drag shoe ...	...	...	...	...	...	...	...	...
Chains securing hydraulic buffer ...	...	...	...	...	...	...	...	...
Chains keep, with shackle and bolt ...	...	...	...	...	...	...	...	...
Chains securing gun, housing, position...	...	...	...	...	...	...	...	...
Clips ... iron elevator with key and chain ...	...	...	...	...	...	...	...	...
Clips ... iron elevator with nut, shackle, pin, and split key	...	...	...	...	...	...	...	...
Clips ... iron with nuts and screws ...	...	...	2	...	...	...	...	2
Clips ... steel, racer, with bolts ...	...	...	...	...	...	...	...	...
Counterweights, cast-iron, step, sighting, automatic, release gear	...	...	...	...	...	...	...	...
Cross heads, rod, piston, steel, with split key ...	...	...	...	2	2	...	...	...
Cups, leather, packing piston rod ...	...	...	...	...	...	...	...	...
Flanges, truck, with bolts ...	...	...	8	...	...	...	...	8
Glands, hydraulic buffer, metal ... — inside	...	...	...	...	...	...	...	...
Glands, hydraulic buffer, metal ... — outside	...	...	...	...	...	...	...	...
Glands, hydraulic buffer, metal ... piston rod inside	2	...	...	2	2	2	...	...
Glands, hydraulic buffer, metal ... piston rod outside	2	...	...	2	2	2	...	...
Glands, hydraulic buffer, metal ... filling hole ...	2	...	...	...	...	...	...	...

* *See* note page 862. † For 4-in. and 5-in. siege only.

Digitized by Google

and Spare Parts for the same—*continued.*

inch.		8-inch.	6-inch Disappearing.						6-inch.		5-inch.	4-inch.	Proportion of Spare.			
Barbette.		Barbette.	Mark II. P gun.		Mark IV. gun.		Mark V. gun.		Vavasseur Central Pivot.	Barbette Central Pivot.	Siege, 6-ft. parapet.	Siege, 6-ft. parapet.	District. Per 20 guns, or any lesser No. not less than 10 of each nature.	Detached group of Sub-Districts. Per 10 guns, or lesser No. of each nature.	Sub-district. Per 10 guns, or less No. of each nature.	Fort or Battery, Per 10 guns, or less No. of each nature.
Mark I. and Ia.*	Mark II.	Mark I.	Mark II.	Mark IV.	Mark II.	Mark IV.	Mark I.	Mark III.								
1	...	1	...	...	...	...	...	...	...	1	1	1	...	...	...	1†
...	...	...	...	...	...	...	...	...	...	...	...	...	...	...	...	...
...	...	...	2	...	2	...	2	2	...	...	...	...	...	...	...	...
...	...	...	...	...	...	...	...	...	...	...	...	...	...	...	...	...
...	...	...	...	...	...	...	...	...	...	...	...	...	...	...	...	...
...	...	...	...	2	...	2	...	...	...	...	...	...	...	...	...	...
...	...	...	...	...	...	...	...	...	...	...	1	1	...	...	...	...
...	...	...	...	...	...	...	...	...	...	...	1	1	...	...	...	...
1	...	1	...	...	...	...	...	...	...	1	...	...	...	...	...	...
...	...	...	...	...	...	...	...	...	1	...	...	...	...	...	...	...
...	...	...	...	...	...	...	...	...	1	...	...	...	...	...	...	...
...	...	...	2	2	2	2	2	2	...	...	2	2	...	...	...	1†
...	...	2	...	...	...	...	...	...	2	...	...	...	...	...	...	2‡
a2	...	...	...	...	...	...	...	...	...	2	...	...	...	...	...	...
a1	1	1	1	1	1	1	1	1	1	1	1	1	...	...	...	...
...	...	...	...	...	...	...	...	...	...	...	...	...	...	...	...	...
...	...	...	...	...	...	...	...	...	...	...	1	1	...	...	...	...
...	...	...	...	...	...	...	...	...	...	...	1	1	...	...	...	...
...	...	...	...	...	...	...	2	...	...	...	...	...	...	...	...	...
...	...	...	...	...	...	...	1	...	...	...	...	...	...	...	...	...
...	...	...	2	...	2	...	...	2	...	...	...	...	...	...	...	...
...	...	...	2	...	2	...	...	...	...	...	...	...	...	...	...	...
...	...	...	...	...	...	...	...	...	...	...	...	...	...	...	...	...
...	...	...	...	...	...	...	4	...	...	...	...	...	...	...	...	1
...	...	...	2	...	2	...	...	...	...	...	...	...	...	...	...	...
1	...	...	...	...	...	...	...	...	2	...	...	...	...	...	...	...
...	...	...	...	...	...	...	...	...	...	...	...	...	...	...	...	...
...	...	...	...	...	...	...	...	...	...	...	...	...	...	...	...	...
1	...	1	...	...	...	...	...	...	...	1	1	1	...	...	...	1†
1	...	1	...	...	...	...	...	...	...	1	1	1	...	...	...	1†
...	2	...	...	...	...	...	...	...	2	...	...	...	...	...	...	...
2	...	...	...	...	...	...	...	...	...	...	...	...	...	...	...	...
...	...	...	...	...	...	...	...	...	...	...	...	...	...	...	...	...

‡ 1 right and 1 left for 8-in. barbette only.

Digitized by Google

Spare B.L. Carriages and Component

Articles.						12-inch.	10-inch.					9·2·	
							Disappearing.	Barbette.			Disappearing.		
								Mark I.		Mark II.			
						Garrison.	Mark I.	Mark II.	C.	D.		Mark I.	Mark II.
Guides	arc, elevating	with bolts	metal, with screws			...	...	...	1	1	...	...	...
			—			...	...	2	...	...	...	...	2
			left			...	...	...	...	...	...	...	...
			right			...	...	...	...	...	...	...	...
			upper part, inside		left	...	1	...	...	...	...	1	...
					right	...	1	...	...	...	...	1	...
			,, ,, outside		left	...	1	...	...	...	...	1	...
					right	...	1	...	...	...	...	1	...
			lower part, inside		left	...	1	...	...	...	..	1	...
					right	...	1	...	...	...	...	1	...
			,, ,, outside		left	...	1	...	...	...	...	1	...
					right	...	1	...	..	...	...	1	...
	link, connecting ladder, rear, with screws				left	...	...	...	...	...	..	...	...
					right	...	...	...	...	...	...	...	...
	round, ladder, rear, steel, with screws				left	...	..	...	...	...	...	...	...
					right	...	..	...	...	...	...	...	...
Hooks	drag chain					...	...	...	...	...	...	...	...
	drag shoe	front				...	...	...	...	...	...	...	...
		rear				...	...	...	...	...	...	...	...
	step sighting					...	...	...	...	...	...	...	...
	spring step sighting	—				...	...	...	...	...	...	...	...
		with collar and nut				...	...	...	...	...	...	...	...
Keys	capsquare, with chain	iron				...	...	...	2	2	...	...	...
		steel, No. 70				4	...	...	...	...	...	...	...
	capsquare, steel	No. 250				...	...	...	...	...	...	...	...
		,, 251				...	...	.	..	...	...	...	...
		,, 252				...	...	...	...	...	...	...	...
		,, 253				...	...	...	...	...	...	...	...
	capsquare, metal					...	4	...	...	...	...	4	...
	securing piston rod	left				...	...	...	...	...	...	...	...
		right				...	...	...	...	...	...	...	...
	split flat	bearing hydraulic buffer				...	...	...	...	...	...	...	...
		pin stay connecting hydraulic buffer				...	...	...	...	...	...	...	...
	split round	L head, rod piston hydraulic buffer, 5-in. × 6·0-in.				...	...	...	...	...	...	...	...
		loop head axle roller, 3-in. × 2·75-in.				...	...	...	...	...	...	...	...
Ladders	look out, iron	front				...	1	...	...	...	...	1	...
		rear				...	1	...	...	...	...	1	...
	sighting, with screws	front				...	...	...	...	...	...	...	...
		rear	right			..	...	...	...	...	...	...	...
			left			...	...	...	...	...	...	...	...

* *See* note page 862. † 1 per carriage.

Digitized by Google

and Spare Parts for the same—*continued.*

inch.		8-inch.	6-inch Disappearing.						6-inch.		5-inch.	4-inch.	Proportion of Spare.			
Barbette.		Barbette.	Mark II. P. gun.		Mark IV. gun.		Mark V. gun.		Vavasseur Central Pivot.	Barbette Central Pivot.	Siege, 6-ft. parapet.	Siege, 6-ft. parapet.	District. Per 20 guns, or any lesser No. not less than 10 of each nature.	Detached group of Sub-Districts. Per 10 guns, or lesser No. of each nature.	Sub-District. Per 10 guns, or less No. of each nature.	Fort or Battery. Per 10 guns, or less No. of each nature.
Mark I. and IA.*	Mark II.	Mark I.	Mark II.	Mark IV.	Mark II.	Mark IV.	Mark I.	Mark III.								
*a*1	...	...	...	...	...	...	...	...	...	...	1	1	...	...	...	...
...	...	...	...	...	...	...	...	...	...	...	...	...	...	...	...	...
...	...	...	1	1	1	1	1	1	...	...	...	...	...	...	...	...
...	...	...	1	1	1	1	1	1	...	...	...	...	...	...	...	...
...	...	...	...	...	...	...	...	...	...	...	...	...	...	...	...	...
...	...	...	...	...	...	...	...	...	...	...	...	...	...	...	...	...
...	...	...	...	...	...	...	...	...	...	...	...	...	...	...	...	...
...	...	...	...	...	...	...	...	...	...	...	...	...	...	...	...	...
...	...	...	...	...	...	...	...	...	...	...	...	...	...	...	...	...
...	...	...	...	...	...	...	...	...	...	...	...	...	...	...	...	...
...	...	...	...	...	...	...	...	...	...	...	...	...	...	...	...	...
...	...	...	...	...	...	...	...	...	...	...	...	...	...	...	...	...
...	...	...	...	...	...	...	...	...	...	...	...	...	...	...	...	...
...	...	...	...	...	...	...	...	...	...	...	...	...	...	...	...	...
...	...	...	1	...	1	...	...	...	...	...	...	...	...	...	...	...
...	...	...	1	...	1	...	...	...	...	...	...	...	...	...	...	...
...	...	...	...	...	...	...	...	...	...	...	1	1	...	...	...	...
...	...	...	...	...	...	...	...	...	...	...	2	2	...	...	...	...
...	...	...	...	...	...	...	...	...	...	...	1	1	...	...	...	...
...	...	...	2	...	2	...	...	...	...	...	...	...	...	...	...	...
...	...	...	...	2	...	2	...	2	...	...	...	...	...	...	...	1†
...	...	...	2	...	2	...	...	...	...	...	...	...	...	...	...	1†
2	...	4	...	2	...	2	...	2	2	2	...	...	...	...	...	1‡
...	...	...	...	...	...	...	...	...	...	...	2	...	...	...	...	2
...	...	...	...	...	...	...	...	...	...	...	2	...	...	...	...	1
...	...	...	...	...	...	...	...	...	...	...	2	...	...	...	...	1
...	...	...	...	...	...	...	...	...	...	...	...	2	...	...	...	1
...	...	...	...	...	...	...	...	...	...	...	...	2	...	...	...	1
...	...	...	...	...	...	...	...	...	...	...	...	...	...	...	...	...
...	...	...	...	...	...	...	...	...	1	...	...	...	...	...	...	1
...	...	...	...	...	...	...	...	...	1	...	...	...	...	...	...	1
...	...	...	...	...	...	...	...	...	...	...	2	2	...	...	...	...
...	...	...	...	...	...	...	...	...	...	...	2	2	...	...	...	...
...	...	...	...	...	...	...	...	...	...	1	...	...	...	...	...	6
...	...	...	...	...	...	...	...	...	...	8	...	...	...	...	...	12
...	...	...	...	...	...	...	...	...	...	...	...	...	...	...	...	...
...	...	...	...	...	...	...	...	...	...	...	...	...	...	...	...	...
...	...	...	1	1	1	1	1	1	...	...	...	...	...	...	...	...
...	...	...	1	1	1	1	...	1	...	...	...	...	...	...	...	...
...	...	...	1	1	1	1	...	1	...	...	...	...	...	...	...	...

‡ 1 each for 6-in. and 8-in. barbette, and 2 for 6-in. Vavasseur C. Pivot.

Digitized by Google

Spare B.L. Carriages and Component

Articles.	12-inch.	10-inch.						9·2-inch.	
		Disappearing.		Barbette.				Disappearing.	
				Mark I.					
	Garrison.	Mark I.	Mark II.	C.	D.	Mark II.		Mark I.	Mark II.
Levers, iron ... adjusting rod, left	1	...	...	...	...	...		...	...
piston ... right	1	...	...	...	...	...		...	...
pump, running back	...	...	...	1	1	...		...	...
step, sighting, with —	...	...	...	...	...	...		...	...
pin and key ... automatic release gear	...	...	...	...	...	...		...	...
counterweight step sighting, automatic release gear	...	...	...	...	...	...		...	...
Links, connecting, levers, —	...	...	...	...	...	...		...	...
step, sighting, iron automatic release gear	...	...	...	...	...	...		...	...
Liners ... manganese bronze, carriage	...	...	...	...	...	...		...	...
steel, cylinder	...	...	...	...	...	...		...	...
Loops ... iron... with collar and nut	...	...	...	...	...	4		...	...
with plate	...	...	...	...	...	...		...	...
with nuts...	4	...	...	...	...	...		...	...
steel —	...	...	...	...	...	...		...	...
with nuts...	...	...	...	2	2	...		...	...
Ordnance, B.L. Bands, elevating	...	...	...	...	...	...		...	...
plates, elevating	...	...	...	...	...	...		...	...
Packings. hydraulic buffer length of 12 inches	...	...	...	...	...	...		...	...
,, ,, 41 ,,	...	...	...	...	...	...		...	...
,, ,, 56 ,,	2	...	...	...	...	...		...	...
,, ,, 64 ,,	...	...	...	2	2	...		...	...
,, ,, 84 ,,	...	...	...	...	...	...		...	...
,, ,, 8 feet	...	...	...	...	...	2		...	...
Pads. buffer india rubber, step, sighting, with collars and screws	...	...	...	...	...	...		...	...
leather ...	...	...	...	...	...	...		...	...
Pans, drip, hydraulic buffer, No. 1	2	...	...	...	...	...		...	...
Pawls, steel, with clutch, step, sighting, automatic release gear	...	...	...	...	...	...		...	...
Pillars, shield... inside...	...	4	...	...	...	...		4	...
outside	...	4	...	...	...	...		4	...
with key	...	...	...	...	...	...		...	...
with screw	...	...	...	...	...	...		...	...
Pins connecting rod, steel, with collar and nut	1	...	...	...	...	...		...	...
joint ... elevator, with collar and key	...	2	...	...	...	...		2	...
iron, with collars and screws	...	2	...	...	...	...		2	...
lever, adjusting, steel, with nuts	2	...	...	...	...	...		...	...
linch, 1st class, steel	...	...	...	...	...	...		...	...
stay, connecting, hydraulic buffer...	...	...	...	...	...	...		...	...
step, side, with split key	...	...	...	...	...	...		...	...
taper shafts, gear elevating, steel, ·427 × 3·75	...	...	...	...	...	...		...	...
Pipes, connecting, hydraulic buffer...	1	...	...	1	1	1		...	...

* *See* note page 862. † 1 per carriage.

Digitized by Google

and Spare Parts for the same—*continued*.

8-inch.	6-inch. Disappearing.						6-inch.		5-inch.	4-inch.	Proportion of Spare.			
Barbette.	Mark II. P. gun.		Mark IV. gun.		Mark V. gun.		Vavasseur Central Pivot.	Barbette Central Pivot.	Siege, 6-ft. parapet.	Siege, 6-ft. parapet.	District, per 20 guns, or any lesser No. not less than 10 of each nature.	Detached group of Sub-Districts. Per 10 guns, or lesser No. of each nature.	Sub-District. Per 10 guns or less No. of each nature.	Fort or Battery. Per 10 guns, or less No. of each nature.
Mark I.	Mark II.	Mark IV.	Mark II.	Mark IV.	Mark I.	Mark III.								
...	...	...	...	...	...	...	...	...	...	...	...	...	...	...
...	...	...	...	...	...	...	...	...	...	...	...	...	...	...
1	...	...	...	...	...	...	...	...	...	...	...	...	...	...
...	...	2	...	2	...	2	...	...	...	...	...	...	...	...
...	...	2	...	2	...	...	...	...	...	...	...	...	...	...
...	...	...	8	...	8	...	8	...	...	...	...	...	...	...
...	...	2	...	2	...	...	...	2	...	...	...	...	...	...
...	...	...	...	...	...	...	...	2	...	...	...	...	...	...
...	4	...	...	...	...	...	...	...	...	...	...	...	...	...
...	2	...	...	...	...	...	...	...	2	2	...	...	...	...
...	...	...	...	...	...	...	...	2	...	...	...	...	...	...
2	...	...	...	...	...	...	...	...	...	...	...	...	...	...
...	2	2	...	...	...	...	...	...	...	...	...	...	...	...
...	...	...	...	...	...	...	...	4	...	...	...	...	...	4†
...	...	...	...	...	...	...	...	...	1	1	...	...	...	1†
1	...	...	...	...	...	...	...	...	...	...	...	...	...	2†
...	2	...	...	...	...	...	1	...	...	...	...	...	...	2†
...	...	4	4	4	4	4	...	...	...	...	...	...	...	...
...	...	10	12	10	12	12	10	...	...	...	...	...	...	...
...	...	...	...	...	...	...	...	...	...	...	...	...	...	...
...	...	2	...	2	...	...	...	...	...	...	...	...	...	...
...	...	...	...	...	...	...	...	...	...	...	...	...	...	...
...	...	4	8	4	8	4	8	...	...	...	...	...	...	...
...	...	4	...	4	...	4	...	...	...	...	...	...	...	...
...	...	2	2	2	2	2	2	...	...	...	...	...	...	...
...	...	...	...	...	...	...	...	...	...	...	...	...	...	...
...	...	...	...	...	...	...	...	...	2	2	...	...	...	1†
...	...	...	...	...	...	...	...	...	2	2	...	...	...	...
...	...	...	...	...	...	...	...	...	4	4	...	...	...	...
...	...	...	...	...	...	...	1	...	...	...	...	...	...	6§
...	1	...	...	...	...	...	...	...	...	...	...	...	...	1‡

‡ 1 each for 12-in. garrison, 9·2-in. barbette II, 10-in. barbette II.
§ For 6-inch barbette only.

Digitized by Google

Spare B.L. Carriages and Component

Articles.	12-inch.	10-inch.					9·2-	
		Disappearing.		Barbette.			Disappearing.	
				Mark I.				
	Garrison.	Mark I.	Mark II.	C.	D.	Mark II.	Mark I.	Mark II.
Pistons, with rod valve and nuts —	...	...	...	...	...	...	...	...
left	1	...	...	1	1	1	...	...
right	1	...	...	1	1	1	...	...
Plates arrow, metal, with screws, right	...	2	...	...	...	...	2	...
elevate and depress ... left	...	2	...	...	...	...	2	...
steel, with bolts	...	8	...	...	...	...	8	...
clip front steel with bolts and bushes ... pairs	...	...	...	...	...	...	...	...
with bolts ... ,,	...	...	...	...	...	1	...	...
with lubricating screws ,,	...	...	...	2	2	...	...	...
inside	...	...	...	...	...	...	...	...
outside	...	...	...	...	...	...	...	...
iron, with bolts	4	...	...	...	...	...	...	...
rear, steel ... pairs	...	...	...	1	1	...	...	...
steel, with bolts front	...	...	...	...	...	...	...	...
rear	...	...	...	...	...	...	...	...
connecting, piston rod, iron	1	...	...	...	...	...	...	...
covershield, steel No. I	...	1	...	...	...	...	1	...
,, II	...	1	...	...	...	...	1	...
,, III	...	1	...	...	...	...	1	...
,, IV	...	1	...	...	...	...	1	...
,, V	...	1	...	...	...	...	1	...
,, VI	...	1	...	...	...	...	1	...
,, VII	...	1	...	...	...	...	1	...
,, VIII	...	1	...	...	...	...	1	...
,, IX	...	1	...	...	...	...	1	...
,, X	...	1	...	...	...	...	1	...
,, XI	...	1	...	...	...	...	1	...
,, XII	...	1	...	...	...	...	1	...
,, XIII	...	1	...	...	...	...	1	...
,, XIV	...	1	...	...	...	...	1	...
,, XV	...	1	...	...	...	...	1	...
,, XVI	...	1	...	...	...	...	1	...
,, XVII	...	1	...	...	...	...	...	...
foot, iron left	...	1	...	...	...	...	1	...
right	...	1	...	...	...	...	1	...
holding down cast-iron... inner	...	5	...	...	...	...	5	...
outer	...	5	...	...	...	...	5	...
—	...	...	...	...	...	...	...	...
indicator, metal, with screws ... rod, connecting, levers, adjusting	1	...	...	...	...	...	...	...
pointer, adjusing, piston rod	2	...	...	...	...	...	...	...
inscription	...	...	...	...	...	...	...	...
— —	...	...	...	...	...	...	...	...

* See note page 862.

Digitized by Google

and Spare Parts for the same—*continued.*

inch.		8-inch.	6-inch Disappearing.						6-inch.		5-inch.	4-inch.	Proportion of Spare.			
Barbette.		Barbette.	Mark II. P gun.		Mark IV. gun.		Mark V. gun.		Vavasseur Central Pivot.	Barbette Central Pivot.	Siege, 6-ft. parapet.	Siege, 6-ft. parapet.	District. Per 20 guns, or any lesser No. not less than 10 of each nature.	Detached group of Sub-Districts. Per 10 guns, or lesser No. of each nature.	Sub-District. per 10 guns, or less No. of each nature.	Fort or Battery. Per 10 guns, or less No. of each nature.
Mark I. and IA.*	Mark II.	Mark I.	Mark II.	Mark IV.	Mark II.	Mark IV.	Mark I.	Mark III.								
1	...	1	...	...	...	...	...	...	...	1	...	...	...	...	...	...
...	1	...	...	...	...	...	...	...	1	...	...	...	...	...	...	1†
...	1	...	...	...	...	...	...	...	1	...	...	...	...	...	...	1†
...	...	...	2	2	2	2	2	2	...	...	...	...	...	...	...	...
...	...	...	2	2	2	2	2	2	...	...	...	...	...	...	...	...
...	...	...	4	...	4	...	...	...	...	...	...	...	...	...	...	2
...	...	1	...	...	...	...	...	...	...	...	...	...	...	...	...	1
...	1	...	...	...	...	...	...	...	...	...	...	...	...	...	...	...
2	...	...	...	...	...	...	...	...	...	2	...	...	...	...	...	1
...	...	...	...	...	...	...	...	...	...	...	...	...	...	...	...	1
...	...	...	...	...	...	...	...	...	...	2	...	...	...	...	...	1
...	...	...	...	...	...	...	...	...	...	...	...	...	...	...	...	...
1	...	1	...	...	...	...	...	...	...	1	...	...	...	...	...	1
...	...	...	...	1	...	1	2	1	...	...	...	...	...	...	...	1
...	...	...	...	2	...	2	2	2	...	...	...	...	...	...	...	1
...	...	...	...	...	...	...	...	...	...	...	...	...	...	...	...	...
...	...	...	1	1	1	1	1	1	...	...	...	...	...	...	...	...
...	...	...	1	1	1	1	1	1	...	...	...	...	...	...	...	...
...	...	...	1	1	1	1	1	1	...	...	...	...	...	...	...	...
...	...	...	1	1	1	1	1	1	...	...	...	...	...	...	...	...
...	...	...	1	1	1	1	1	1	...	...	...	...	...	...	...	...
...	...	...	1	1	1	1	1	1	...	...	...	...	...	...	...	...
...	...	...	1	1	1	1	1	1	...	...	...	...	...	...	...	...
...	...	...	1	...	1	...	1	1	...	...	...	...	...	...	...	...
...	...	...	...	...	...	...	...	...	...	...	...	...	...	...	...	...
...	...	...	...	...	...	...	...	...	...	...	...	...	...	...	...	...
...	...	...	...	...	...	...	...	...	...	...	...	...	...	...	...	...
...	...	...	...	...	...	...	...	...	...	...	...	...	...	...	...	...
...	...	...	...	...	...	...	...	...	...	...	...	...	...	...	...	...
...	...	...	...	...	...	...	...	...	...	...	...	...	...	...	...	...
...	...	...	...	...	...	...	...	...	...	...	...	...	...	...	...	...
...	...	...	...	...	...	...	...	...	...	...	...	...	...	...	...	...
...	...	...	...	...	...	...	...	...	...	...	...	...	...	...	...	...
...	...	...	...	...	...	...	...	...	...	...	...	...	...	...	...	...
...	...	...	...	...	...	...	...	...	...	...	...	...	...	...	...	...
...	...	...	...	...	...	...	...	...	...	...	...	...	...	...	...	...
...	...	...	...	...	...	...	...	...	...	...	...	...	...	...	...	...
...	...	...	...	...	...	...	...	...	...	...	...	...	...	...	...	...
...	...	...	...	...	...	...	...	...	...	...	...	...	...	...	...	...
...	...	...	...	...	...	...	...	...	...	...	...	...	...	...	...	...
...	...	...	...	...	...	...	...	...	...	...	...	...	...	...	...	...
...	...	...	...	...	...	...	...	...	...	...	...	...	...	...	...	...
...	...	...	...	...	...	...	...	...	...	...	...	...	...	...	...	...
...	...	...	...	...	...	...	...	...	...	...	...	...	...	...	...	...
...	...	...	...	...	...	...	...	...	...	...	...	...	...	...	...	...
...	...	...	...	...	...	...	...	...	...	...	...	...	...	...	...	...
...	...	...	...	...	...	...	...	...	...	...	...	...	...	...	...	...
...	...	...	...	...	...	...	...	...	...	...	...	...	...	...	...	...
...	...	...	...	...	...	...	...	...	...	...	...	...	...	...	...	...
...	...	...	...	...	...	...	...	...	...	...	...	...	...	...	...	...
...	...	...	...	...	...	...	...	...	...	...	...	...	...	...	...	...
...	...	...	...	...	...	...	...	...	...	...	...	...	...	...	...	...
...	...	...	...	...	...	...	...	...	...	...	...	...	...	...	...	...
...	...	...	...	...	...	...	...	...	...	...	...	...	...	...	...	...
...	...	...	...	...	...	...	...	...	1	...	1	1	...	...	...	...
...	...	...	...	...	...	...	...	...	1	...	...	...	...	...	...	...

† For 12-in. garrison only.

Digitized by Google

Spare B.L. Carriages and Component

Articles.	12-inch.	10-inch.					9·2-	
		Disappearing.		Barbette.			Disappearing.	
	Garrison.	Mark I.	Mark II.	Mark I.		Mark II.	Mark I.	Mark II.
				C.	D.			
Plates, instruction, metal, with screws ... cylinder, recoil ...	...	1	...	...	...	...	1	...
Plates, instruction, metal, with screws ... gear, pump lowering ...	...	1	...	...	...	...	1	...
Plates, instruction, metal, with screws ... „ raising valve ...	...	1	...	...	...	...	1	...
Plates, man hole	...	2	...	...	...	...	2	...
Plates, pivot, with bolts	...	...	1	...	...	...	...	1
Plates, securing, axles, roller, iron, with screws	...	...	...	...	...	14	...	...
Plugs, emptying hole, hydraulic buffer	...	...	...	...	...	...	...	...
Plugs, filling „ „ „	2	...	...	2	2	2	...	...
Plugs, steel cylinder left	...	...	...	...	...	...	...	...
Plugs, steel cylinder right	...	...	...	...	...	...	...	...
Pointers, adjusting, piston rod, steel, with stud and nuts	2	...	...	...	...	...	...	...
Pointers, arc, elevating, metal, with stud, collar, and nut	...	...	...	...	...	...	...	...
Pointers, steel	...	...	...	...	...	...	...	...
Posts, hand, iron...	...	...	...	...	...	...	...	...
Pumps, air, double carriage, garrison, disappearing ...	...	*a*	*a*	...	...	...	*a*	*a*
Pump, running back	...	...	...	1	1	1	...	...
Racks, brake, iron	1	...	...	...	...	...	...	...
Racks, traversing, steel, with bolts	...	1	...	...	...	...	1	...
Rams, controlling	...	...	...	2	2	...	...	...
Rings, metal leather, packing, hydraulic buffer ...	...	...	...	2	2	...	...	...
Rings, packing, hydraulic buffer, leather L section ...	2	...	...	...	...	2	...	...
Rings, packing, hydraulic buffer, leather U „	...	...	...	2	2	...	...	...
Rings, roller iron	...	...	...	...	...	...	...	...
Rings, roller steel	...	1	...	...	...	...	1	...
Rods, connecting lever, adjusting, iron	1	...	...	...	...	...	...	...
Rods, connecting levers, step, sighting, automatic release gear	...	...	...	...	...	...	...	...
Rollers, carriage —	...	...	...	10	10	...	...	...
Rollers, carriage No. 1	14	...	...	...	...	...	...	...
Rollers, carriage front or rear	...	...	...	...	...	8	...	...
Rollers, carriage intermediate	...	...	...	...	...	6	...	...
Rollers, path steel, upper...	...	1	...	...	...	...	1	...
Rollers, with bolts lower, with clip ring ...	...	1	...	...	...	...	1	...
Rollers, shifting	...	...	...	...	...	...	...	...
Rollers, steel —	...	20	...	...	...	...	18	...
Rollers, steel ... front	...	...	...	...	...	...	...	...
Rollers, steel ... No. 6	...	...	...	...	...	...	...	...
Rollers, steel ... „ 7	...	...	...	...	...	...	...	...
Rounds, ladder, iron ... ... right	...	...	...	...	...	...	...	...
Rounds, ladder, iron ... ... left	...	...	...	...	...	...	...	...
Rounds, ladder, iron ... ... long	...	...	...	...	...	...	...	...
Rounds, ladder, iron ... ... short	...	...	...	...	...	...	...	...

* *See* note page 862.

Digitized by Google

and Spare Parts for the same—*continued.*

9·2-inch.			8-inch.	6-inch Disappearing.						6-inch.		5-inch.	4-inch.	Proportion of Spare.			
Barbette.			Barbette.	Mark II. P. gun.		Mark IV. gun.		Mark V. gun.		Vavasseur Central Pivot.	Barbette Central Pivot.	Siege, 6-ft. parapet.	Siege, 6-ft. parapet.	District. Per 20 guns, or any lesser No. not less than 10 of each nature.	Detached group of Sub-Districts. Per 10 guns, or lesser No. of each nature.	Sub-District. Per 10 guns, or less No. of each nature.	Fort or Battery. Per 10 guns, or less No. of each nature.
Mark I. and IA.*	Mark II.	Mark I.		Mark II.	Mark IV.	Mark II.	Mark IV.	Mark I.	Mark III.								
...	...	...	...	1	1	1	1	1	1	...	...	...	...	...	...	...	...
...	...	...	...	1	1	1	1	1	1	...	...	...	...	...	...	...	...
...	...	...	...	1	1	1	1	1	1	...	...	...	...	...	...	...	...
...	...	...	...	1	1	1	1	1	1	...	...	...	...	...	...	...	...
...	...	...	...	...	...	...	...	...	...	...	...	...	...	...	...	...	...
...	14	...	...	...	...	...	...	...	...	...	...	...	...	...	...	...	4
...	...	1	...	...	...	...	...	...	...	2	1	...	...	...	...	...	1
1	2	1	...	...	...	...	...	...	...	2	1	1	1	...	...	1	2†
...	...	...	...	...	...	...	...	...	...	1	...	...	...	...	...	...	...
...	...	...	...	...	...	...	...	...	...	1	...	...	...	...	...	...	...
...	...	...	...	...	...	...	...	...	...	...	...	...	...	...	...	...	...
...	...	...	...	...	...	...	...	...	...	1	...	...	...	...	...	...	...
...	...	...	...	1	1	1	1	1	1	...	...	...	...	...	...	...	...
...	...	...	...	2	2	2	2	...	2	...	...	...	...	...	...	...	...
...	...	...	...	...	...	*a*	*a*	*a*	*a*	...	...	...	...	1	...	...	...
1	1	...	...	...	...	...	...	...	...	...	...	...	...	...	...	...	...
...	...	...	...	...	...	...	...	...	...	...	...	...	...	...	...	...	...
...	...	...	...	...	...	...	...	...	...	...	...	...	...	...	...	...	...
1	...	...	...	...	...	...	...	...	...	2	...	...	...	...	...	...	...
1	...	1	...	...	...	...	...	...	...	2	1	...	...	...	...	...	...
2	2	...	...	...	...	...	...	...	...	2	...	1	1	...	...	...	2
2	...	...	...	...	...	...	...	...	...	...	1	...	...	...	...	...	2‡
...	...	...	...	...	1	...	1	...	1	...	...	...	...	...	...	...	...
...	...	...	...	1	...	1	...	...	...	...	...	...	...	...	...	...	...
...	...	...	...	...	...	...	...	...	...	...	...	...	...	...	...	...	...
...	...	...	...	2	...	2	...	...	...	...	...	...	...	...	...	...	...
10	...	8	...	...	...	...	...	...	...	...	...	...	...	...	...	...	...
...	...	...	...	...	...	...	...	...	...	...	...	...	...	...	...	...	1
...	8	...	...	...	...	...	...	...	...	...	...	...	...	...	...	...	1
...	6	...	...	...	...	...	...	...	...	...	...	...	...	...	...	...	1
...	...	...	...	...	...	...	...	...	...	...	...	...	...	...	...	...	...
...	...	...	...	...	...	...	...	...	...	...	...	...	...	...	...	...	...
...	...	...	...	...	...	...	...	...	...	...	...	...	...	...	...	...	...
...	...	...	...	...	...	...	...	...	...	...	...	...	...	...	...	...	...
...	...	...	...	...	...	...	...	...	...	...	8	...	...	...	...	...	...
...	...	...	...	...	...	...	...	...	...	...	...	...	...	...	...	...	...
...	...	...	...	16	...	16	...	...	...	...	...	...	...	...	...	...	...
...	...	...	...	...	16	...	16	...	16	...	...	...	...	...	...	...	...
...	...	...	...	1	...	1	...	...	...	...	...	...	...	...	...	...	...
...	...	...	...	1	...	1	...	...	...	...	...	...	...	...	...	...	...
...	...	...	...	...	2	...	2	...	2	...	...	...	...	...	...	...	...
...	...	...	...	...	2	...	2	...	2	...	...	...	...	...	...	...	...

† 1 for 6-in., 8-in., and 9·2-in. barbette I.; also 6-in. C.P., and 4-in. and 5-in. siege.
‡ Per carriage.

Digitized by Google

Spare B.L. Carriages and Component

Articles.	12-inch.	10-inch.					9·2-	
		Disappearing.		Barbette.			Disappearing.	
	Garrison.	Mark I.	Mark II.	Mark I.		Mark II.	Mark I.	Mark II.
				C.	D.			
Screws { capsquare	...	...	...	...	...	...	...	...
Screws { lubricating metal $\frac{5}{16}$ × $\frac{1}{2}$-in.	...	...	...	...	...	...	...	...
Screws { lubricating metal $\frac{3}{8}$ × $\frac{1}{2}$,, ...	...	...	...	...	...	...	...	...
Screws { set, fixing cylinder	...	...	...	...	...	...	...	...
Shackles, lifting, iron, with pin collar and key	...	...	...	...	...	4	...	...
Shafts { step, sighting, iron, with collars, flatheads, and keys	...	...	...	...	...	...	...	...
Shafts { wrought-iron, counterweight, step, folding, automatic release gear	...	...	...	...	...	...	...	...
Shields, steel, overhead, with connecting plates ...	...	1	...	...	...	...	1	...
Shoes, drag, iron, 1st class	...	...	...	...	...	...	...	...
Sights { reflecting, mirrors { lower	...	1	...	...	...	...	1	...
		upper	...	1	...	...	...	...	1	...
Sights { Scott's, telescopic (if fitted)	...	1	...	...	...	...	1	...
Sights { wrought-iron, rough, on shield ... { front	...	1	...	...	...	...	1	...
		rear	...	1	...	...	...	...	1	...
Sights { steel, with sockets { front	...	...	...	...	...	...	...	...
		rear	...	...	...	...	...	...	...	...
Spindles, buffer, iron, with collar and nut	...	...	...	...	...	...	...	...
Springs, spiral, step, sighting, steel	...	...	...	...	...	...	...	...
Stages, side, with bolts { left	...	...	1	...	...	...	...	1
and screws ... ... { right	...	...	1	...	...	...	...	1
Stays { iron, tensile ... { left	...	...	...	...	...	...	...	...
		right	...	...	...	...	...	...	...	...
Stays { pipe, connecting, iron, with bolts and nuts ...	2	...	...	...	...	...	...	...
Stays { pillar, iron, with bolts and keys	...	8	...	...	...	...	8	...
Stays { steel, connecting, hydraulic buffer ...	...	...	...	...	...	...	...	...
Steps { sighting, steel ... { left	...	...	...	...	...	...	...	...
		right	...	...	...	...	...	...	...	...
Steps { wood { laying	...	...	...	...	...	...	...	...
		side	...	...	...	...	...	...	...	...
Stops, buffer, with bolts { left	...	...	...	...	...	...	...	...
		right	...	...	...	...	...	...	...	...
Straps, securing	...	...	...	...	...	...	...	...
Studs, capsquare, with nuts and split key	...	...	4	...	...	...	...	4
Trucks, steel { —	...	...	...	...	...	...	...	...
Trucks, steel { front, with spur wheel	...	...	2	...	...	...	...	2
Trucks, steel { rear	...	...	2	...	...	...	...	2
Valves { hydraulic buffer, metal	2	...	...	2	2	...	...	...
Valves { draw off, hydraulic buffer	1	...	...	2	2	...	...	...
Washers, drag, 1st Class, B.	...	...	...	...	...	...	...	...

* *See* note page 862. † 1 for each carriage.

Digitized by Google

and Spare Parts for the same—*continued.*

9.2-inch.		8-inch.	6-inch Disappearing.						6-inch.		5-inch.	4-inch.	Proportion of Spare.			
Barbette.		Barbette.	Mark II. P gun.		Mark IV. gun.		Mark V. gun.		Vavasseur Central Pivot.	Barbette Central Pivot.	Siege, 6-ft. parapet.	Siege, 6-ft. parapet.	District. Per 20 guns, or any lesser No. not less than 10 of each nature.	Detached group of Sub-Districts. Per 10 guns, or lesser No. of each nature.	Sub-District. Per 10 guns, or less No. of each nature.	Fort or Battery. Per 10 guns, or less No. of each nature.
Mark I. and IA.*	Mark II.	Mark I.	Mark II.	Mark IV.	Mark II.	Mark IV.	Mark I.	Mark III.								
...	...	...	4	...	4	...	4	...	...	...	...	...	...	...	...	...
...	...	...	...	...	...	...	...	...	5	...	...	...	...	...	...	2
...	...	...	...	...	...	...	...	...	...	14	...	...	...	...	...	..
...	...	...	...	...	...	...	...	...	2	...	...	...	...	...	...	...
...	4	...	...	...	...	...	...	...	...	...	...	...	...	..	...	...
...	...	...	2	2	2	2	...	2	...	...	...	...	...	...	...	...
...	...	...	2	...	2	...	...	...	...	...	...	...	...	...	...	...
...	...	...	1	1	1	1		1	...	...	...	...	...	...	...	...
...	...	...	...	...	...	...	...	...	...	...	1	1	...	...	...	...
...	...	...	...	...	...	...	...	...	...	...	...	...	...	...	...	...
...	...	...	...	...	...	...	...	...	...	...	...	...	...	...	...	...
...	...	...	...	...	...	...	...	...	...	...	...	...	...	...	...	...
...	...	...	...	...	...	...	...	...	...	...	...	...	...	...	...	...
...	...	...	1	1	1	1	1	1	...	...	...	...	...	...	...	...
...	...	...	1	1	1	1	1	1	...	...	...	...	...	...	...	...
...	...	...	4	4	4	4	4	4	...	...	...	...	...	...	...	...
...	...	...	2	2	2	2	...	2	...	...	...	...	...	...	...	1†
...	...	...	...	...	...	...	...	...	...	...	...	...	...	...	...	...
...	...	...	...	...	...	...	...	...	...	...	...	...	...	...	...	...
...	...	...	...	...	...	...	...	...	...	...	1	1	...	...	...	...
...	...	...	...	...	...	...	...	...	...	...	1	1	...	...	...	...
...	...	...	...	...	...	...	...	...	...	...	...	...	...	...	...	...
...	...	...	8	8	8	8	8	8	...	...	...	...	...	...	...	...
...	...	...	...	...	...	...	...	...	...	...	2	2	...	...	...	...
...	...	...	1	1	1	1	...	1	...	...	...	...	...	...	...	...
...	...	...	1	1	1	1	...	1	...	...	...	...	...	...	...	...
...	...	...	...	...	...	...	...	...	...	...	1	1	...	...	...	...
...	...	...	...	...	...	...	...	...	...	...	2	2	...	...	...	...
...	...	1	...	...	...	...	...	...	...	...	...	...	...	...	...	...
...	...	1	...	...	...	...	...	...	...	...	...	...	...	...	...	...
...	...	...	...	...	...	...	...	...	...	...	15	15	...	...	...	...
...	...	...	...	...	...	...	...	...	...	...	...	...	...	...	...	..
...	...	...	...	...	...	...	4	...	...	...	...	...	...	...	...	...
...	...	...	...	...	...	...	...	...	...	...	...	...	...	...	...	...
...	...	...	...	...	...	...	...	...	...	...	...	...	...	...	...	...
1	...	1	...	...	...	...	...	...	2	1	...	...	...	...	...	...
1	...	...	...	...	...	...	...	...	...	...	1	1	...	...	...	1§
...	...	...	...	...	...	...	...	...	...	...	2	2	...	...	...	1†

§ For 12-in. garrison and 4-in. and 5-in. siege,

Digitized by Google

Spare B.L. Carriages and Componont

Articles.			12-inch.	10-inch.					9 2-	
				Disappearing.	Barbette.				Disappearing.	
					Mark I.					
			Garrison.	Mark I.	Mark II.	C.	D.	Mark II.	Mark I.	Mark II.
Washers, packing	hydraulic buffer, leather	set of 4 ... ... sets	1	...	...	...	...	...	...	...
		,, 5 ... ... ,,	...	...	...	...	...	...	...	...
		,, 6 ... ... ,,	...	...	...	...	...	...	...	...
		,, 8 ... ... ,,	...	...	...	...	...	1	...	...
		,, 13 ... ... ,,	...	...	...	1	1	...	...	...
	pipe, connecting, leather	,, 2 ... ... ,,	...	...	...	1	1	...	...	...
		,, 6 ... ... ,,	1	...	...	...	...	...	...	...
		,, 8 ... ... ,,	...	...	...	...	...	1	...	...
Wheels, 1st Class, B, No. 7			...	...	...	...	...	...	...	...
CYLINDERS, RECOIL.										
Bearings, pinion, spur, raising valve iron			...	1	...	...	...	...	1	...
Brackets guide	plunger, lowering pump, iron ...		...	1	...	...	...	...	1	...
	rack, raising iron		...	1	...	...	...	...	1	...
	valve ... steel		...	...	...	...	...	...	...	...
	iron, raising valve		...	1	...	...	...	...	1	...
Bushes, bottom, metal			...	...	1	...	...	...	...	1
Chambers, air	left		...	...	1	...	...	...	...	1
	right		...	...	1	...	...	...	...	1
Connections, pump, lowering	metal		...	2	...	...	...	...	2	...
	steel		...	...	...	...	...	...	...	...
Covers, recoil	cylinders, iron, with bolts		...	1	...	...	...	...	1	...
	valve metal		...	6	...	...	...	...	4	...
	valve spring metal		...	6	...	...	...	...	4	...
Cylinders, steel			...	1	1	...	...	...	1	1
Cross-heads, steel, for ram, with plates and screws ...			...	1	...	...	...	...	1	...
Gauges	pressure		...	...	1	...	...	...	...	1
	test, with weights...		...	...	1	...	...	...	...	1
	water level		...	...	1	...	...	...	...	1
	—		...	...	1	...	...	...	...	1
Glands, metal	inner		...	...	...	...	...	...	...	...
	outer		...	...	...	...	...	...	...	...
	recoil cylinder		...	1	...	...	...	...	1	...
Glasses, gauge (sets of 6)			...	...	1	...	...	...	...	1
Handles, valve, filling, iron			...	...	...	...	...	...	...	...
Insertion, jointing			...	...	...	...	...	...	...	...
Nuts, metal, recoil valve, with screws			...	6	...	...	...	...	4	...
Packing	hydraulic ... ... lbs.		...	...	...	...	...	...	...	...
	— ... ... ,,		...	...	...	...	...	...	...	...
	gland for ram of length of 20 ft. length		...	1	...	...	...	...	1	...
	cylinder ,, ,, 78 in. ,,		...	...	...	...	...	...	...	...

* *See* note page 862.

† 1 for each carriage.

Digitized by Google

and Spare Parts for the same—*continued.*

9·2-inch.		8-inch.	6-inch Disappearing.						6-inch.		5-inch.	4-inch.	Proportion of Spare.					
Barbette.		Barbette.	Mark II. P. gun.		Mark IV. gun.		Mark V. gun.		Vavasseur Central Pivot.	Barbette Central Pivot.	Siege, 6-ft. parapet.	Siege, 6-ft. parapet.	District. Per 20 guns, or any lesser No. not less than 10 of each nature.	Detached group of Sub-Districts. Per 10 guns, or lesser No. of each nature.	Sub-District. Per 10 guns, or less No. of each nature.	Fort or Battery. Per 10 guns, or less No. of each nature.		
Mark I. and Ia.*	Mark II.	Mark I.	Mark II.	Mark IV.	Mark II.	Mark IV.	Mark I.	Mark III.										
...	...	...	...	...	...	...	...	...	...	1	...	...	...	...	...	2†		
...	...	1	...	...	...	...	...	...	...	...	...	...	...	...	...	2†		
1	...	...	...	...	...	...	...	...	1	...	...	...	...	...	...	2†		
...	1	...	...	...	...	...	...	...	...	...	...	...	...	...	...	2†		
...	...	...	...	...	...	...	...	...	...	...	...	...	...	...	...	2†		
...	...	...	...	...	...	...	...	...	...	...	...	...	...	...	...	1†		
...	1	...	...	...	...	...	...	...	...	...	...	...	...	...	...	1†		
...	...	...	...	...	...	...	...	...	...	...	2	2	...	...	...	...		
...	...	...	1	1	1	1	...	1	...	...	...	...	...	...	...	...		
...	...	...	1	1	1	1	...	1	...	...	...	...	...	...	...	...		
...	...	...	...	...	...	...	...	...	...	...	...	...	...	...	...	...		
...	...	...	1	1	1	1	...	1	...	...	...	...	...	...	...	...		
...	...	...	...	...	...	...	...	...	...	...	...	...	...	...	...	...		
...	...	...	...	...	...	...	...	...	...	...	...	...	...	...	...	...		
...	...	...	...	...	...	...	...	...	...	...	...	...	...	...	...	...		
...	...	...	...	...	...	...	...	...	...	...	...	...	...	...	...	...		
...	...	...	...	...	...	...	...	...	...	...	...	...	...	...	...	...		
...	...	...	1	1	1	1	1	1	...	...	...	...	...	...	...	...		
...	...	...	...	...	...	...	...	...	...	...	...	...	...	...	...	...		
...	...	...	...	...	...	...	...	...	...	...	...	...	...	...	...	...		
...	...	...	...	...	...	...	...	...	...	...	...	...	...	...	...	...		
...	...	...	1	1	1	1	1	1	...	...	...	...	...	...	...	...		
...	...	...	...	...	...	...	...	...	...	...	...	...	...	...	...	...		
...	...	...	...	...	...	...	...	...	...	...	...	...	...	...	...	...		
...	...	...	...	...	...	...	...	...	...	...	...	...	...	...	...	...		
...	...	...	...	...	...	...	...	...	...	...	...	...	...	...	...	...		
...	...	...	1	1	1	1	1	1	...	...	...	...	...	...	...	...		
...	...	...	1	1	1	1	1	1	...	...	...	...	...	...	...	...		
...	...	...	...	...	...	...	...	...	...	...	...	...	...	...	...	...		
...	...	...	...	...	...	...	1	...	...	...	...	...	...	...	...	1		
...	...	...	...	...	...	...	...	...	...	...	...	...	...	...	...	...	§	
...	...	...	...	...	...	...	3	...	...	...	...	...	...	...	...	3		
...	...	...	...	...	...	...	...	...	...	...	...	...	...	...	...	§		
...	...	...	...	...	...	...	...	...	...	...	...	...	...	...	...	1†		
...	...	...	1	1	1	1	...	1	...	...	...	...	...	...	...	1†		

§ 14 lbs. for 9·2-in. and 10-in. E. and A.

Digitized by Google

Spare B.L. Carriages and Component

Articles.	12-inch.	10-inch.					9·2-	
		Disappearing.	Barbette.				Disappearing.	
	Garrison.	Mark I.	Mark II.	Mark I. C.	Mark I. D.	Mark II.	Mark I.	Mark II.
Pipes, copper, connecting { pump and air vessel (set of 2) ... sets	...	...	1	...	...	...	...	1
{ air vessels ... ... set	...	...	1	...	...	...	...	1
Plates ... { guide, rod, connecting, with screws	...	...	2	...	...	...	...	2
{ securing, gland, iron ,, ...	...	...	...	...	...	...	...	...
Plugs { air ... ... metal	...	1	...	...	...	...	1	...
{ ,, chambers ... ... ,,	...	11	...	...	...	...	11	...
{ centre ... ... ,,	...	...	...	...	...	...	1	...
Rams { iron, with key...	...	...	...	...	...	...	...	...
{ metal, with nut and screw	...	1	...	...	...	...	1	...
{ steel	...	...	1	...	...	...	...	1
Rings { metal { gland, outer...	...	1	...	...	...	...	1	...
{ leather, packing	...	1	...	...	...	...	1	...
{ india-rubber, for gauge glass (set of 6)... set	...	...	1	...	...	...	...	1
{ packing, { L section	...	1	1	..	...	...	1	1
{ leather { U section	...	...	1	...	...	...	...	1
Rods, connecting, steel, with cap, bolts and lubricating tube	...	...	1	...	...	...	...	1
Seats, recoil valve, metal	...	6	...	...	...	...	4	...
Springs { ram, steel	...	15	...	...	...	...	15	...
{ valve, recoil { metal	...	6	...	...	...	...	4	...
{ { steel	...	...	...	...	...	...	...	...
Trunnions, steel, recoil, cylinder	...	1	...	...	...	...	1	...
Tubes, india-rubber, valve release, with coupling ...	...	...	1	...	...	...	...	1
Valves, metal { blow off	...	...	1	...	...	...	...	1
{ by-pass, with spindle and hand wheel ...	...	...	1	...	...	...	...	1
{ filling...	...	1	...	...	...	...	1	...
{ pump, connecting, self-acting...	...	...	2	...	...	...	...	2
{ recoil { with connecting { left	...	6	...	...	...	...	4	...
{ { pipe ... ... { right	...	...	1	...	...	...	...	1
{ water level	...	1	...	...	...	...	1	...
Washers, packing { cylinder recoil (leather) { set of 8 ... ... sets	...	...	...	...	...	...	...	...
{ ,, 17 ... ... ,,	...	...	...	...	...	...	...	...
{ ,, 18 ... ... ,,	...	...	...	...	...	...	...	...
{ ,, 25 ... ... ,,	...	...	...	...	...	...	1	...
{ ,, 28 ... ... ,,	...	1	...	...	...	...	...	...
{ ,, 33 ... ... ,,	...	...	1	...	...	...	...	1
{ connections, indicator, pressure (leather) set of 4 ... ... sets	...	...	...	...	...	...	...	...

* *See* note page 862.

Digitized by Google

and Spare Parts for the same—*continued.*

9·2-inch.		8-inch.	6-inch. Disappearing.						6-inch.		5-inch.	4-inch.	Proportion of Spare.			
Barbette.		Barbette.	Mark II. P. gun.		Mark IV. gun.		Mark V. gun.		Vavasseur Central Pivot.	Barbette Central Pivot.	Siege, 6-ft. parapet.	Siege, 6-ft. parapet.	District. Per 20 guns, or any lesser No. not less than 10 of each nature.	Detached group of Sub-Districts. Per 10 guns, or lesser No. of each nature.	Sub-District. Per 10 guns, or less No. of each nature.	Fort or Battery. Per 10 guns, or less No. of each nature.
Mark I. and IA.*	Mark II.	Mark I.	Mark II.	Mark IV.	Mark II.	Mark IV.	Mark I.	Mark III.								
...	...	...	...	...	...	...	...	...	...	...	...	...	...	...	...	1
...	...	...	...	...	...	...	...	...	...	...	...	...	...	...	...	1
...	...	...	...	...	...	...	...	...	...	...	...	...	...	...	...	...
...	...	...	...	...	...	...	1	...	...	...	...	...	...	...	...	...
...	...	...	1	1	1	1	...	1	...	...	...	...	...	...	...	1‡
...	...	...	11	10	11	10	...	10	...	...	...	...	...	...	...	...
...	...	...	...	...	...	...	...	...	...	...	...	...	...	...	...	...
...	...	...	...	...	...	...	1	...	...	...	...	...	...	...	...	...
...	...	...	1	1	1	1	...	1	...	...	...	...	...	...	...	...
...	...	...	...	...	...	...	...	...	...	...	...	...	...	...	...	...
...	...	...	...	...	...	...	...	...	...	...	...	...	...	...	...	...
...	...	...	1	1	1	1	1	1	...	...	...	...	...	...	...	...
...	...	...	...	...	...	...	...	...	...	...	...	...	...	...	...	1
...	...	...	...	...	...	...	...	...	...	...	...	...	...	...	...	2‡
...	...	...	1	1	1	1	1	1	...	...	...	...	...	...	...	2‡
...	...	...	...	...	...	...	...	...	...	...	...	...	...	...	...	...
...	...	...	...	...	...	...	...	...	...	...	...	...	...	...	...	...
...	...	...	13	13	13	13	...	13	...	...	...	...	...	...	...	...
...	...	...	1	1	1	1	2	1	...	...	...	...	...	...	...	...
...	...	...	...	...	...	...	...	...	...	...	...	...	...	...	...	†
...	...	...	...	...	...	...	...	...	...	...	...	...	...	...	...	...
...	...	...	...	...	...	...	...	...	...	...	...	...	...	...	...	...
...	...	...	...	...	...	...	...	...	...	...	...	...	...	...	...	...
...	...	...	...	...	...	...	...	...	...	...	...	...	...	...	...	1
...	...	...	1	1	1	1	1	1	...	...	...	...	...	...	...	1
...	...	...	...	...	...	...	...	...	...	...	...	...	...	...	...	...
...	...	...	1	1	1	1	2	1	...	...	...	...	...	...	...	1
...	...	...	...	...	...	...	...	...	...	...	...	...	...	...	...	...
...	...	...	...	...	...	...	...	...	...	...	...	...	...	...	...	...
...	...	...	1	1	1	1	1	1	...	...	...	...	...	...	...	1
...	...	...	...	...	...	...	1	...	...	...	...	...	...	...	...	2‡
...	...	...	...	1	...	1	...	1	...	...	...	...	...	...	...	2‡
...	...	...	1	...	1	...	...	...	...	...	...	...	...	...	...	2‡
...	...	...	...	...	...	...	...	...	...	...	...	...	...	...	...	2‡
...	...	...	...	...	...	...	...	...	...	...	...	...	...	...	...	2‡
...	...	...	...	...	...	...	...	...	...	...	...	...	...	...	...	2‡
...	...	...	1	1	1	1	...	1	...	...	...	...	...	...	..	2‡

† 2 for 9·2 and 10-in. disappearing E. and A. ‡ Per carriage.

Digitized by Google

Spare B.L. Carriages and Component

Articles.	12-inch.	10-inch.					9·2-inch.	
		Disappearing		Barbette.			Disappearing	
	Garrison.	Mark I.	Mark II.	Mark I. C.	Mark I. D.	Mark II.	Mark I.	Mark II.
GEAR, ELEVATING.								
Arcs, elevating — iron — left	...	1	1	...	...	...	1	1
iron — right	...	...	1	...	...	...	...	1
iron — right, with pointer	...	1	...	...	...	...	1	...
steel	...	...	...	1	1	...	...	...
Bands, friction — equalizing brake, iron	...	1	...	...	...	...	1	...
friction — brake drum, iron	...	...	...	...	...	...	...	...
Blocks, driving iron, friction ring	...	1	...	...	...	...	1	...
Bolts, cramp, brake	...	...	...	...	...	...	...	...
Brackets, steel — 1st motion shaft — left	...	1	...	...	...	...	1	...
1st motion shaft — right	...	1	...	...	...	...	1	...
2nd ,, ,, — left	...	1	...	...	...	...	1	...
2nd ,, ,, — right	...	1	...	...	...	...	1	...
3rd ,, ,, — left	...	1	...	...	...	...	1	...
3rd ,, ,, — right	...	1	...	...	...	...	1	...
Caps, steel, elevating arc, guides — left	...	1	...	...	...	...	1	...
right	...	1	...	...	...	...	1	...
Cones, friction — brake, drum, steel	...	1	...	...	...	...	1	...
friction — spur wheel — with key	...	...	2	...	...	...	...	2
friction — spur wheel — steel	...	...	...	...	...	...	...	...
friction — spur wheel — metal	...	...	...	...	...	...	...	...
Cotters, wheel, hand elevating, steel	...	...	...	...	...	...	...	...
Covers ... — pinions and wheel, rear of slide, metal	...	...	...	...	...	...	...	...
Covers ... — wheel, spur and pinion, iron, with screws	...	...	2	...	...	...	...	2
Cramps, brake	...	...	...	...	...	...	...	...
Drums ... — brake, iron	...	...	...	...	...	...	...	...
Drums ... — friction, cast-iron, equalizing brake	...	1	...	...	...	...	1	...
Guards, wheel, spur and pinion ... — —	...	...	...	...	...	...	...	...
Guards, wheel, spur and pinion ... — metal, with bolts	...	...	...	1	1	...	...	...
Handles, brake, iron	...	...	...	1	1	...	...	...
Indicators, metal, pointer	...	...	2	...	...	...	...	2
Keys, split, round, loop head — cotter, wheel, hand elevating, ·25-in. × 1·125-in.	...	...	...	...	...	...	...	...
Keys, split, round, loop head — handle, wheel, hand elevating, ·12-in. × 1·25-in.	...	...	...	...	...	...	...	...
Keys, split, round, loop head — spindle worm, ·25-in. × 3·0-in.	...	...	...	...	...	...	...	...
Keys, split, round, loop head — elevating ·312 ,, × 3·0 ,,	...	...	...	...	...	...	...	...
Nuts, adjusting, spring, equalizing brake iron	...	2	...	...	...	...	2	...
Pawls — brake, iron	...	...	...	...	...	...	...	...
Pawls — band, equalizing brake, iron	...	1	...	...	...	...	1	...

* *See* note page 862.

Digitized by Google

and Spare Parts for the same—*continued.*

9-inch.		8-inch.	6-inch. Disappearing.						6-inch.		5-inch.	4-inch.	Proportion of Spare.				
Barbette.		Barbette.	Mark II. P. gun.		Mark IV. gun.		Mark V. gun.		Vavasseur Central Pivot.	Barbette Central Pivot.	Siege, 6-ft. parapet.	Siege, 6-ft. parapet.	District. Per 20 guns, or any lesser No. not less than 10 of each nature.	Detached group of Sub-Districts. Per 10 guns, or lesser No. of each nature.	Sub-District. Per 10 guns, or less No. of each nature.	Fort or Battery. Per 10 guns, or less No. of each nature.
Mark I. and Ia.*	Mark II.	Mark I.	Mark II.	Mark IV.	Mark II.	Mark IV.	Mark I.	Mark III.								
...	...	...	1	1	1	1	1	1	...	...	...	...	...	...	...	...
...	...	...	1	1	1	1	1	1	...	...	...	...	...	...	...	...
...	...	...	...	...	...	...	...	...	...	...	...	...	...	...	...	...
1	...	1	...	...	...	...	...	...	1	...	1	1	...	...	...	1†
...	...	...	1	1	1	1	1	1	...	...	...	...	...	...	...	...
...	...	...	...	...	...	...	...	...	...	...	...	...	...	...	...	...
...	...	1	...	...	...	...	...	...	...	...	...	...	...	...	...	...
...	...	...	...	...	...	...	...	...	...	...	...	...	...	...	...	...
...	...	...	...	...	...	...	...	...	...	...	...	...	...	...	...	...
...	...	...	...	...	...	...	...	...	...	...	...	...	...	...	...	...
...	...	...	...	...	...	...	...	...	...	...	...	...	...	...	...	...
...	...	...	...	...	...	...	...	...	...	...	...	...	...	...	...	...
...	...	...	...	...	...	...	...	...	...	...	...	...	...	...	...	...
...	...	...	...	...	...	...	...	...	...	...	...	...	...	...	...	...
...	...	...	1	1	1	1	1	1	...	...	...	...	...	...	...	...
...	...	...	1	1	1	1	1	1	...	...	...	...	...	...	...	1
...	...	1	...	...	...	...	...	...	...	...	...	...	...	...	...	...
...	...	...	...	...	...	...	...	...	1	...	...	...	...	...	...	...
...	...	...	...	...	...	...	...	...	1	...	...	...	...	...	...	...
...	...	1	...	...	...	...	...	...	...	...	...	...	...	...	...	...
...	...	...	1	1	1	1	1	1	...	...	...	...	...	...	...	...
...	...	...	...	...	...	...	...	...	...	...	...	...	...	...	...	...
...	...	1	...	...	...	...	...	...	1	...	...	...	...	...	...	...
1	...	...	...	...	...	...	...	...	...	...	...	...	...	...	...	...
1	...	1	...	...	...	...	...	...	...	...	...	...	...	...	...	...
...	...	...	...	...	...	...	...	...	...	...	...	...	...	...	...	...
...	...	...	...	...	...	...	...	...	...	...	...	...	...	...	...	4‡
...	...	...	...	...	...	...	...	...	...	...	...	...	...	...	...	4‡
...	...	...	...	...	...	...	...	...	...	...	...	...	...	...	...	4‡
...	...	...	...	...	...	...	...	...	...	...	...	...	...	...	...	4‡
...	...	...	1	1	1	1	1	1	...	...	...	...	...	...	...	...
...	...	...	...	...	...	...	...	...	...	...	...	...	...	...	...	...

† For 4-inch and 5-inch only. ‡ For 6-inch Vavasseur Central Pivot only.

Digitized by Google

Spare B.L. Carriages and Component

Articles.	12-inch.	10-inch.					9·2-	
		Disappearing.		Barbette.			Disappearing.	
	Garrison.	Mark I.	Mark II.	Mark I.		Mark II.	Mark I.	Mark II.
				C.	D.			
Pinions elevating 1st motion rear of slide	...	...	...	...	...	...	...	...
1st motion metal, with iron pin and key	...	...	...	...	...	...	...	...
1st motion spindle collar and key	...	...	...	...	...	...	...	...
1st motion with spindle, collar and key	...	...	2	...	...	...	...	2
2nd motion steel	...	...	...	...	...	...	...	...
2nd motion with spindle, collar and key	...	...	2	...	...	...	...	2
3rd motion	...	...	2	...	...	...	...	2
spur, steel 1st motion shaft, 13 teeth	...	...	1	...	...	...	1	...
spur, steel 2nd ,, ,, 15 ,,	...	...	1	...	...	...	1	...
spur, steel 3rd ,, ,, 15 ,,	...	...	2	...	...	...	2	...
steel, with spindle	...	...	...	...	...	...	...	...
,, ,, ,, and nuts	...	...	...	...	...	...	...	...
steel, with spindles 1st motion elevating, with collar, nut, and screw	...	...	...	...	...	...	...	...
steel, with spindles 1st motion with nut and split key	...	...	...	1	1	...	...	...
steel, with spindles 2nd motion with friction rings, spring, washers, nuts, and split keys	...	...	...	1	1	...	...	...
steel, with spindles 2nd motion elevating, with nut	...	...	...	...	...	...	...	...
Pins iron, pawl, brake with collar and key	...	...	...	...	...	...	...	...
Pins steel, elevating arc	...	...	2	...	...	...	2	...
Plates, friction, steel, spur wheel	...	...	1	...	...	...	1	...
Plugs, jamming, brake, metal	...	...	...	2	2	...	...	...
Pointers, metal, indicator, with bolts	...	...	2	...	...	...	...	2
Rings, friction pinion, spindle, 2nd motion metal thick	...	...	...	1	1	...	...	...
Rings, friction pinion, spindle, 2nd motion metal thin	...	...	...	4	4	...	...	...
Rings, friction pinion, spindle, 2nd motion steel large	...	...	...	1	1	...	...	...
Rings, friction pinion, spindle, 2nd motion steel small thick	...	...	...	1	1	...	...	...
Rings, friction pinion, spindle, 2nd motion steel small thin	...	...	...	3	3	...	...	...
Rings, friction manganese, bronze	...	...	...	...	...	...	...	...
Rings, friction steel thick	...	...	...	...	...	...	...	...
Rings, friction steel thin	...	...	...	...	...	...	...	...
Rings, friction wheel spur metal thick	...	...	5	...	...	...	5	...
Rings, friction wheel spur metal thin	...	...	1	...	...	...	1	...
Rings, friction wheel spur iron	...	...	5	...	...	...	5	...
Rods... connecting, iron left	...	...	...	1	...	...	...	1
Rods... connecting, iron right	...	...	...	1	...	...	...	1
Rods... connecting, iron with pin and split key	...	...	...	...	...	...	...	...
Rods... elevating, consisting of double and single eye, spring box, spring bolt, and set screws	...	...	2	...	...	...	2	...

* *See* note page 86

Digitized by Google

and Spare Parts for the same—*continued.*

9.2-inch.		8-inch.	6-inch. Disappearing.			6-inch.		5-inch.	4-inch.	Proportion of Spare.			
Barbette.		Barbette.	Mark II. P. gun.	Mark IV. gun.	Mark V. gun.	Vavasseur Central Pivot.	Barbette Central Pivot.	Siege, 6-ft. parapet.	Siege, 6-ft. parapet.	District.	Detached group of Sub-Districts.	Sub-District.	Fort or Battery.
Mark I. and Ia.*	Mark II.	Mark I.	Mark II.	Mark IV.	Mark I. Mark III.					Per 20 guns, or any lesser No. not less than 10 of each nature.	Per 10 guns, or lesser No. of each nature.	Per 10 guns, or less No. of each nature.	Per 10 guns, or less No. of each nature.
...	...	...	...	...	...	2	...	...	...	...	...	...	...
...	...	...	...	...	1	...	...	...	...	...	...	...	...
...	...	...	1	1	1 1	...	...	...	...	...	...	...	...
...	...	...	2	2	2 2	...	...	...	...	...	...	...	...
...	...	...	...	...	...	...	...	...	...	...	...	...	...
...	...	...	...	...	...	...	...	...	...	...	...	...	...
...	...	...	...	...	...	...	...	...	...	...	...	...	...
...	...	...	...	...	...	...	...	...	...	...	...	...	...
...	...	...	...	...	...	...	...	...	...	...	...	...	...
...	...	...	...	...	...	1	...	...	...	...	...	...	...
...	...	...	...	...	...	...	...	1	1	...	...	...	1
...	...	1	...	...	...	...	...	...	...	...	...	...	...
1	...	...	...	...	...	...	...	...	...	...	...	...	...
1	...	...	...	...	...	...	...	...	...	...	...	...	...
...	...	1	...	...	...	...	...	...	...	...	...	...	...
...	...	...	1	1	1 1	...	...	...	...	...	...	...	...
...	...	...	...	...	...	...	...	...	...	...	...	...	...
...	...	...	...	...	...	...	...	...	...	...	...	...	...
1	...	2	...	...	...	...	...	...	...	...	...	...	...
...	...	...	...	...	...	...	...	...	...	...	...	...	...
1	...	...	...	...	...	...	...	...	...	...	...	...	1
4	...	...	...	...	...	...	...	...	...	...	...	...	2
1	...	...	...	...	...	...	...	...	...	...	...	...	1
1	...	...	...	...	...	...	...	...	...	...	...	...	1
3	...	...	...	...	...	4	4	...	...	...	...	...	2
...	...	...	...	...	...	2	2	...	...	...	...	...	1
...	...	...	...	...	...	3	3	...	...	...	...	...	1
...	...	...	...	...	...	...	...	...	...	...	...	...	...
...	...	...	...	...	...	...	...	...	...	...	...	...	...
...	...	...	...	...	...	...	...	...	...	...	...	...	...
...	...	...	2	2	2 2	...	...	...	...	...	...	...	1
...	...	...	...	...	...	...	...	...	...	...	...	...	...

Digitized by Google

Spare B.L. Carriages and Component

Articles.	12-inch.	10-inch.					9·2-	
		Disappearing.		Barbette.			Disappearing.	
	Garrison.	Mark I.	Mark II.	Mark I.		Mark II.	Mark I.	Mark II.
				C.	D.			
Screws Ck. Hd., fixing cover plate, graduated, metal, ⅝-in. × ⅝-in.	...	...	...	...	...	...	...	...
Screws jamming	...	...	1	...	...	...	...	1
Screws ,, brake, iron	...	...	...	1	1	...	...	...
Shafts steel, pinion, rear of slide, with key, washer, and pin	...	...	...	...	...	...	...	...
Shafts iron 1st motion, with collars and keys ...	...	1	...	...	...	...	1	...
Shafts iron 2nd motion with collars, keys, and nuts ...	...	...	...	...	...	...	...	...
Shafts iron 2nd motion with keys	...	1	...	...	...	...	1	...
Shafts iron 3rd motion with keys and nuts ...	...	...	1	...	...	...	...	1
Shafts iron 3rd motion with nuts, caps, and pins	...	1	...	...	...	...	1	...
Shafts iron rod, connecting	...	...	1	...	...	...	...	1
Spindles steel, worm, with collar and nut ...	...	...	...	...	...	...	...	...
Spindles ,, wheel at rear of slide, with nut and pin	...	...	...	...	...	...	...	...
Springs, steel brake, drum	...	1	...	...	...	...	1	...
Springs, steel cone, spur, —	...	...	...	...	...	...	...	...
Springs, steel wheel, — ... ... pairs	...	...	6	...	...	...	...	6
Springs, steel elevating, arc, with bolts	...	2	...	...	...	...	2	...
Springs, steel elevating, rod	...	2	...	...	...	...	2	...
Springs, steel friction plate ... ... pairs	...	1	...	...	...	...	1	...
Springs, steel ,, cone	...	...	...	...	...	...	...	...
Springs, steel washer, spindle, elevating	...	...	...	...	...	...	...	...
Stops, handle, brake, iron	...	...	...	1	1	...	...	...
Studs, band, equalizing brake, iron, with nuts ...	...	1	...	...	...	...	1	...
Washers, pinion, spindle, 2nd motion, steel ...	...	...	...	1	1	...	...	...
Washers, spring pinion, spindle	...	...	...	...	...	...	...	...
Wheels hand, iron	...	2	2	1	1	...	2	2
Wheels elevating, rear of slide	...	...	...	...	...	...	...	...
Wheels metal spur, 56 teeth	...	...	...	...	...	...	...	...
Wheels metal hand, elevating	...	...	...	...	...	...	...	...
Wheels metal worm with friction cone and feather	...	...	...	...	...	...	...	...
Wheels metal worm — —	...	...	...	...	...	...	...	...
Wheels spur 2nd motion	...	...	2	...	...	...	...	2
Wheels spur 2nd motion, shaft, 60 teeth	...	1	...	...	...	...	1	...
Wheels spur 3rd motion, shaft, 56 teeth	...	1	...	...	...	...	1	...
Wheels spur cone friction	...	...	2	...	...	...	...	2
Wheels spur 30 teeth	...	...	...	...	...	...	...	...
Wheels spur 63 ,, steel	...	...	...	1	1	...	...	...
Worms, elevating	...	...	...	...	...	...	...	...

* *See* note page 852. For 6-in. Barbette. ‡ 1 per carriage.

Digitized by Google

and Spare Parts for the same—*continued.*

9-inch.		8-inch.	6-inch. Disappearing.						6-inch.		5-inch.	4-inch.	Proportion of Spare.			
Barbette.		Barbette.	Mark II. P. gun.		Mark IV. gun.		Mark V. gun.									
Mark I. and IA.*	Mark II.	Mark I.	Mark II.	Mark IV.	Mark II.	Mark IV.	Mark I.	Mark III.	Vavasseur Central Pivot.	Barbette Central Pivot.	Siege, 6-ft. parapet.	Siege, 6-ft. parapet.	District, Per 20 guns, or any lesser No. not less than 10 of each nature.	Detached group of Sub-Districts. Per 10 guns, or lesser No. of each nature.	Sub-District. Per 10 guns, or less No. of each nature.	Fort or Battery. Per 10 guns, or less No. of each nature.
...	...	...	...	...	...	...	...	...	...	...	...	...	...	...	...	12†
...	...	...	...	...	...	...	...	...	...	...	...	...	...	...	...	...
1	...	1	...	...	...	...	...	...	...	...	...	...	...	...	...	...
...	...	...	...	...	...	...	...	...	1	...	...	...	...	...	...	...
...	...	...	...	...	...	...	...	...	...	...	...	...	...	...	...	...
...	...	...	1	1	1	1	1	1	...	...	...	...	...	...	...	1
...	...	...	...	...	...	...	...	...	...	...	...	...	...	...	...	...
...	...	...	...	...	...	...	...	...	...	...	...	...	...	...	...	...
...	...	...	...	...	...	...	...	...	...	...	...	...	...	...	...	...
...	...	...	...	...	...	...	...	...	1	...	1	1	...	...	...	...
...	...	...	...	...	...	...	...	...	1	...	...	...	...	...	...	...
...	...	...	1	1	1	1	1	1	...	...	...	...	...	...	...	1‡
...	...	...	1	1	1	1	1	1	...	...	...	...	...	...	...	1‡
...	...	...	...	...	...	...	...	...	...	...	...	...	...	...	...	3
...	...	...	...	...	...	...	...	...	...	...	...	...	...	...	...	...
...	...	...	...	...	...	...	...	...	...	...	...	...	...	...	...	...
...	...	...	...	...	...	...	...	...	...	...	...	...	...	...	...	...
...	...	1	...	...	...	...	...	...	...	...	...	...	...	...	...	...
...	...	...	...	...	...	...	...	...	1	...	...	...	...	...	...	...
1	...	...	...	...	...	...	...	...	...	...	...	...	...	...	...	...
...	...	...	...	...	...	...	...	...	...	...	...	...	...	...	...	...
1	...	...	...	...	...	...	...	...	...	...	...	...	...	...	...	2
...	...	1	...	...	...	...	...	...	1	1	...	...	...	...	...	1§
1	...	1	1	1	1	1	1	1	...	...	...	...	...	...	...	...
...	...	...	...	...	...	...	...	...	1	...	...	...	...	...	...	...
...	...	...	1	1	1	1	1	1	...	...	...	...	...	...	...	...
...	...	...	...	...	...	...	...	...	1	...	1	1	...	...	...	1
...	...	...	...	...	...	...	...	...	...	...	1	1	...	...	...	...
...	...	...	...	...	...	...	...	...	1	...	...	...	...	...	...	...
...	...	...	...	...	...	...	...	...	...	...	...	...	...	...	...	...
...	...	...	...	...	...	...	...	...	...	...	...	...	...	...	...	...
...	...	...	...	...	...	...	...	...	...	...	...	...	...	...	...	...
...	...	...	...	...	...	...	...	...	...	...	...	...	...	...	...	...
...	...	1	...	...	...	...	...	...	...	...	...	...	...	...	...	...
1	...	...	...	...	...	...	...	...	...	...	...	...	...	...	...	...
...	...	...	...	...	...	...	...	...	1	...	...	...	...	...	...	...

§ 2 for 6-in. Barbette. ‖ For 4 and 5-in. siege.

Digitized by Google

Spare B.L. Carriages and Component

Articles.	12-inch.	10-inch.					9·2-inch.	
		Disappearing.		Barbette.			Disappearing.	
				Mark I.				
	Garrison.	Mark I.	Mark II.	C.	D.	Mark II.	Mark I.	Mark II.
GEAR, HOLDING DOWN.								
Beams, cross, with bolts	...	...	1	...	...	...	...	1
Buffers, preventing jump	...	...	1	...	...	...	...	1
Clips, racer, iron, with bolts	...	...	2	...	...	...	...	2
Covers, iron, with screws	...	...	2	...	...	...	...	2
GEAR INDICATOR.								
Arcs, metal, with bolts	...	...	...	1	1	...	...	...
Bushes, metal, flanged	...	...	...	...	...	1	...	...
Guards, disc indicator, metal, with bolts	...	...	...	1	1	...	...	...
Plates, metal, yard, scale	...	...	...	1	1	...	...	...
Pinions jamming, metal, with collar	...	...	...	1	1	...	...	...
Pinions steel, with spindle, spring washer and nut	...	...	...	1	1	...	...	...
Pointers, indicator, metal, with bolts	...	...	...	1	1	...	...	...
GEAR, LOADING.								
Arcs, loading, with cradle, pin, and jamming screw	...	...	1	...	...	...	...	1
Barrows, projectile	...	...	...	...	...	...	...	...
Chains, endless	...	...	1	...	...	...	...	1
Covers, with screws	...	...	1	...	...	...	...	1
Handles, winch, iron	...	...	2	...	...	...	...	2
Pawls, wheel, ratchet	...	...	1	...	...	...	...	1
Pinions, steel, 2nd motion, with collar and key	...	...	1	...	...	...	...	1
Rollers, guide lower	...	...	2	...	...	...	...	2
Rollers, guide upper	...	...	2	...	...	...	...	2
Shafts, winch handle	...	...	1	...	...	...	...	1
Spindles, roller, guide, with key	...	...	3	...	...	...	...	3
Trays, projectile	...	...	...	...	...	...	...	...
Wheels ratchet	...	...	1	...	...	...	...	1
Wheels sprocket large	...	...	1	...	...	...	...	1
Wheels sprocket small	...	...	1	...	...	...	...	1
GEAR, PUMP, LOWERING.								
Boxes, stuffing, metal	...	1	...	...	...	...	1	...
Glands, valve, lowering, metal	...	...	...	...	...	...	...	...

* *See* note page 862.

Digitized by Google

and Spare Parts for the same—*continued.*

12-inch.		8-inch.	6-inch Disappearing.						6-inch.		5-inch.	4-inch.	Proportion of Spare.			
Barbette.		Barbette.	Mark II. P. gun.		Mark IV. gun.		Mark V. gun.		Vavasseur Central Pivot.	Barbette Central Pivot.	Siege, 6-ft. parapet.	Siege, 6-ft parapet.	District. Per 20 guns, or any lesser No. not less than 10 of each nature.	Detached group of Sub-Districts. Per 10 guns, or lesser No. of each nature.	Sub-District. Per 10 guns, or less No. of each nature.	Fort or Battery. Per 10 guns, or less No. of each nature.
Mark I. and Ia.*	Mark II.	Mark I.	Mark II.	Mark IV.	Mark II.	Mark IV.	Mark I.	Mark III.								
...	...	...	...	...	...	...	...	...	...	...	...	...	...	...	...	...
...	...	...	...	...	...	...	...	...	...	...	...	...	...	...	...	...
...	...	...	...	...	...	...	...	...	...	...	...	...	...	...	...	...
...	...	...	...	...	...	...	...	...	...	...	...	...	...	...	...	...
1	...	...	...	...	...	...	...	...	...	...	...	...	...	...	...	...
...	1	...	...	...	...	...	...	...	...	...	...	...	...	...	...	...
1	...	...	...	...	...	...	...	...	...	...	...	...	...	...	...	...
1	...	...	...	...	...	...	...	...	...	...	...	...	...	...	...	...
1	...	...	...	...	...	...	...	...	...	...	...	...	...	...	...	...
1	...	...	...	...	...	...	...	...	...	...	...	...	...	...	...	...
1	...	...	...	...	...	...	...	...	...	...	...	...	...	...	...	...
...	...	...	...	...	...	...	...	...	...	...	...	...	...	...	...	...
...	...	...	...	...	...	...	...	...	...	...	...	...	...	...	...	1
...	...	...	...	...	...	...	...	...	...	...	...	...	...	...	...	...

Spare B.L. Carriages and Component

Articles	12-inch.	10-inch.					9·2-	
		Disappearing.		Barbette.			Disappearing.	
	Garrison.	Mark I.	Mark II.	Mark I. C.	Mark I. D.	Mark II.	Mark I.	Mark II.
Guards, pump, lowering iron, with screws	...	...	...	...	...	...	...	...
Levers plunger iron, with links and pins	...	1	...	...	...	...	1	...
Levers plunger steel	...	..	...	...	...	...	...	...
Levers shaft, cross, iron with stop	...	1	...	...	...	...	1	...
Levers shaft, cross, iron socket lever	...	1	...	...	...	...	1	...
Levers socket, iron, with chain and pin	...	1	...	...	...	...	1	...
Nozzles, steel pipe, suction	...	1	...	...	...	...	1	...
Nozzles, steel ,, delivery	...	1	...	...	...	...	1	...
Packing, pump, (length of 45 inches) ... lengths	...	...	...	...	...	...	...	...
Packing, piston ... ... ,, 75 ,, ... ,,	...	1	...	...	...	...	1	...
Pipes, copper delivery	...	1	...	...	...	...	1	...
Pipes, copper suction	...	1	...	...	...	...	1	...
Pumps, lowering, metal —	...	...	...	...	...	...	...	...
Pumps, lowering, metal with bolts	...	1	...	...	...	...	1	...
Rings, packing, gland, metal	...	1	...	...	...	...	1	...
Springs, valve, P.B. ... ... delivery	...	2	...	...	...	...	2	...
Springs, valve, P.B. ... ... suction	...	2	...	...	...	...	2	...
Shafts, cross, iron ... ... with collar and key	...	...	...	...	...	...	...	...
Shafts, cross, iron ... ... with key inner	...	1	...	...	...	...	1	...
Shafts, cross, iron ... ... with key outer	...	1	...	...	...	...	1	...
Valves, metal delivery	...	2	...	...	...	...	2	...
Valves, metal suction	...	2	...	...	...	...	2	...
Washers, packing pump, lowering (leather) set of 5 ... ... set	...	...	...	...	...	...	...	...
Washers, packing pump, lowering (leather) ,, 7 ... ... ,,	...	1	...	...	...	...	1	...
Washers, packing pipe, copper (leather) delivery, set of 2 ... ,,	...	...	...	...	...	...	...	...
Washers, packing pipe, copper (leather) suction ,, ... ,,	...	...	...	...	...	...	...	...
GEAR, RAISING, VALVE.								
Boxes, stuffing, metal	...	1	...	...	...	...	1	...
Chain-checks, iron cut off gear, with nuts, pins and shackles	...	...	...	...	...	...	...	...
Chain-checks, iron with nuts, pins, and shackles	...	1	...	...	...	...	1	...
Glands, valve, raising, metal	...	1	...	...	...	...	1	...
Guards, sheave, cut off gear, iron, with screws	...	...	...	...	...	...	...	...
Lanyards, lever, cut off gear, steel, wire rope	...	...	...	...	...	...	...	...
Levers rod, connecting iron, with pin, collar, and key ... ... left ...	...	1	...	...	...	...	1	...
Levers rod, connecting iron, with pin, collar, and key ... ... right ...	...	1	...	...	...	...	1	...
Levers rod, connecting with pin, chain, lock and key ...	...	...	...	...	...	...	...	...
Levers hand, shaft, cross, iron	...	1	...	...	...	...	1	...
Levers valve, spindle, with pin, sheave, collar and key ...	...	...	...	...	...	...	...	...

* *See* note page 862.

Digitized by Google

and Spare Parts for the same—*continued.*

9-inch.		8-inch.	6-inch. Disappearing.						6-inch.		5-inch.	4-inch.	Proportion of Spare.			
Barbette.		Barbette.	Mark II. P. gun.		Mark IV. gun.		Mark V. gun.		Yavasseur Central Pivot.	Barbette Central Pivot.	Siege, 6-ft. parapet.	Siege, 6-ft. parapet.‡	District. Per 20 guns, or any lesser No. not less than 10 of each nature.	Detached group of Sub-Districts. Per 10 guns, or lesser No. of each nature.	Sub-District. Per 10 guns, or less No. of each nature.	Fort or Battery. Per 10 guns, or less No. of each nature.
Mark I. and IA.*	Mark II.	Mark I.	Mark II.	Mark IV.	Mark III.	Mark IV.	Mark I.	Mark III.								
...	...	...	...	...	...	...	1	...	...	...	...	...	...	...	...	...
...	...	...	...	...	...	...	...	...	...	...	...	...	...	...	...	...
...	...	...	1	1	1	1	1	1	...	...	...	...	...	...	...	...
...	...	...	1	1	1	1	...	1	...	...	...	...	...	...	...	...
...	...	...	...	...	...	...	...	...	...	...	...	...	...	...	...	...
...	...	...	1	1	1	1	1	1	...	...	...	...	...	...	...	...
...	...	...	...	...	...	...	...	...	...	...	...	...	...	...	...	...
...	...	...	...	...	...	...	...	...	...	...	...	...	...	...	...	...
...	...	...	1	1	1	1	...	1	...	...	...	...	...	...	...	1†
...	...	...	...	...	...	...	...	...	...	...	...	...	...	...	...	1†
...	...	...	1	1	1	1	1	1	...	...	...	...	...	...	...	1
...	...	...	1	1	1	1	1	1	...	...	...	...	...	...	...	1
...	...	...	1	1	1	1	1	1	...	...	...	...	...	...	...	...
...	...	...	...	...	...	...	...	...	...	...	...	...	...	...	...	...
...	...	...	1	1	1	1	1	1	...	...	...	...	...	...	...	...
...	...	...	2	2	2	2	2	2	...	...	...	...	...	...	...	2†
...	...	...	2	2	2	2	2	2	...	...	...	...	...	...	...	2†
...	...	...	1	1	1	1	...	1	...	...	...	...	...	...	...	...
...	...	...	...	...	...	...	...	...	...	...	...	...	...	...	...	...
...	...	...	...	...	...	...	...	...	...	...	...	...	...	...	...	...
...	...	...	1	1	1	1	1	1	...	...	...	...	...	...	...	1
...	...	...	1	1	1	1	1	1	...	...	...	...	...	...	...	1
...	...	...	1	1	1	1	...	1	...	...	...	...	...	...	...	2†
...	...	...	...	...	...	...	1	...	...	...	...	...	...	...	...	2†
...	...	...	1	1	1	1	...	1	...	...	...	...	...	...	...	1
...	...	...	1	1	1	1	...	1	...	...	...	...	...	...	...	...
...	...	...	...	...	...	...	...	...	...	...	...	...	...	...	...	...
...	...	...	1	1	1	1	1	1	...	...	...	...	...	...	...	...
...	...	...	...	...	...	...	3	...	...	...	...	...	...	...	...	...
...	...	...	...	...	...	...	1	...	...	...	...	...	...	...	...	1
...	...	...	1	1	1	1	...	1	...	...	...	...	...	...	...	...
...	...	...	1	1	1	1	...	1	...	...	...	...	...	...	...	...
...	...	...	...	...	...	...	1	...	...	...	...	...	...	...	...	...
...	...	...	1	1	1	1	...	1	...	...	...	...	...	...	...	...
...	...	...	...	...	...	...	1	...	...	...	...	...	...	...	...	...

† Per carriage.

Digitized by Google

Spare B.L. Carriages and Component

Articles.	12-inch.	10-inch.					9·2-	
		Disappearing.		Barbette.			Disappearing.	
	Garrison.	Mark I.	Mark II.	Mark I. C.	Mark I. D.	Mark II.	Mark I.	Mark II.
Packing for gland { — ... ... ozs.	...	...	...	...	...	...	...	...
Packing for gland { length of 15 inches ... lengths	...	...	...	...	...	...	...	...
Packing for gland { ,, 32 ,, ... ,,	...	1	...	...	...	...	1	...
Pinions, spur, metal, { 40 teeth	...	1	...	...	...	...	1	...
with nuts ... ... { 48 ,, ...	...	...	...	...	...	...	...	...
Plates, cover, iron, with screws	...	1	...	...	...	...	1	...
Rings, packing, valve, raising, metal	...	1	...	...	...	...	1	...
Racks, iron	...	1	...	...	...	...	1	...
Rods, connecting, iron, with pin, collar and key ...	...	1	...	...	...	...	1	...
Shafts, cross, iron { with collar and key	...	...	...	...	...	...	...	...
Shafts, cross, iron { with key, arc lever	...	1	...	...	...	...	1	...
Sheaves, metal, cut off gear	...	...	...	...	...	...	...	...
Spindles { valve, metal...	...	1	...	...	...	...	1	...
Spindles { and valve, with pin	...	...	...	...	...	...	...	...
Studs, iron, cut off { lanyard...	...	...	...	...	...	...	...	...
gear... ... ... { sheave	...	...	...	...	...	...	...	...
Valves, metal	...	1	...	...	...	...	1	...
GEAR, SIGHTING.								
Bars, radius, iron { left	...	1	...	...	...	...	1	...
Bars, radius, iron { right	...	1	...	...	...	...	1	...
Brackets { steel radius bar, sighting { left ...	...	1	...	...	...	...	1	...
Brackets { platform, with bolts... { right ...	...	1	...	...	...	...	1	...
Brackets { iron radius frame, sighting platform, with bolts	...	4	...	...	...	...	4	...
Bolts, iron, radius frame	...	4	...	...	...	...	4	...
Buffers, india-rubber, with bolts	...	4	...	...	...	...	4	...
Frames, radius, steel	...	2	...	...	...	...	2	...
Hooks, iron { stop, connecting rod	...	4	...	...	...	...	4	...
Hooks, iron { with nuts for spring...	...	4	...	...	...	...	4	...
Pins { iron, with collars and pins, { long ...	...	2	...	...	...	...	2	...
Pins { for foot plate ... ... { short ...	...	4	...	...	...	...	4	...
Pins { iron, radius bar	...	2	...	...	...	...	2	...
Pins { joint, connecting rod	...	4	...	...	...	...	4	...
Plates, foot-chequered, iron, with brackets ...	...	2	...	...	...	...	2	...
Rods, connecting...	...	4	...	...	...	...	4	...
Slides, iron, grooved, for radius bar { left ...	...	1	...	...	...	...	1	...
and support for cover plates... { right ...	...	1	...	...	...	...	1	...
Springs, steel, foot plates	...	4	...	...	...	...	4	...

* *See* note page 862.

Digitized by Google

and Spare Parts for the same—*continued*.

8-inch.	6-inch. Disappearing.						6-inch.		5-inch.	4-inch.	Proportion of Spare.			
Barbette.	Barbette.	Mark II. P. gun.		Mark IV. gun.		Mark V. gun.		Vavasseur Central Pivot.	Barbette Central Pivot	Siege, 6-ft. parapet.	Siege, 6-ft. parapet.	District.		Sub-District.	Fort or Battery.
Mark I. and IA.*	Mark II.	Mark I.	Mark II.	Mark IV.	Mark II.	Mark IV.	Mark I.	Mark III.							
							8					Per 20 guns, or any lesser No. not less than 10 of each nature.	Per 10 guns, or lesser No. of each nature.	Per 10 guns or less No. of each nature.	Per 10 guns, or less No. of each nature.
			1	1	1	1		1							
			1	1	1	1		1							
			1	1	1	1		1							
			1	1	1	1		1							
			1	1	1	1	1	1							
			1	1	1	1		1							
							3								
															1
			1	1	1	1	1	1							1
							1								
							3								

† Per carriage. ‡ 1 per carriage.

Digitized by Google

Spare B.L. Carriages and Component

Articles.	12-inch.	10-inch.					9·2-	
		Disappearing.		Barbette.			Disappearing.	
				Mark I.				
	Garrison.	Mark I.	Mark II.	C.	D.	Mark II.	Mark I.	Mark II.
GEAR, TRAVERSING.								
Blocks, disconnecting, with handle	...	...	2	...	...	...	...	2
Brackets, iron — carrying gear, with caps and bolts ... left	...	...	...	...	...	...	...	...
Brackets, iron — carrying gear, with caps and bolts ... right	...	...	...	...	...	...	...	...
Brackets, iron — with bolts and box guard foot ... 1st motion shaft	...	2	...	...	...	...	2	...
Brackets, iron — with bolts and box guard foot ... 2nd ,, ,,	...	2	...	...	...	...	2	...
Brackets, iron — with bolts and box guard foot ... 3rd ,, ,, upper	...	2	...	...	...	...	2	...
Brackets, iron — with bolts and box guard foot ... 3rd ,, ,, lower	...	2	...	...	...	...	2	...
Covers, iron, with screws	...	...	2	..	...	...	...	2
Guards, iron, pinion, spindle, with screws	...	...	...	...	...	...	...	...
Handles, crank	...	...	2	...	...	...	...	2
Pinions — bevel — 1st motion shaft, 14 teeth	...	2	...	...	...	...	...	...
Pinions — bevel — crank handle	...	...	2	...	...	...	...	2
Pinions — bevel — shaft, diagonal	...	...	2	...	...	...	...	2
Pinions — spur — shaft, diagonal	...	...	2	...	...	...	...	2
Pinions — spur — spindle, 2nd motion	...	...	2	...	...	...	...	2
Pinions — spur — spindle, 3rd ,,	...	...	2	...	...	...	...	2
Pinions — spur — 2nd motion, shaft, 12 teeth	...	2	...	...	...	...	2	...
Pinions — spur — 3rd ,, ,, 12 ,,	...	2	...	...	...	...	...	...
Pinions — spur — 3rd ,, ,, 13 ,,	...	...	...	...	...	...	2	...
Pinions — with spindle and key — bevel	...	...	...	...	...	...	...	...
Pinions — with spindle and key — spur	...	...	...	...	...	...	...	...
Plates, metal, arrow, with screws ... right	...	2	...	...	...	...	2	...
Plates, metal, arrow, with screws ... left	...	2	...	...	...	...	2	...
Shafts — diagonal	...	...	2	...	...	...	...	2
Shafts — iron — with collar, key, and screw	...	...	...	...	...	...	...	...
Shafts — iron — 1st motion, with keys, collars, and pins	...	2	...	...	...	...	2	...
Shafts — iron — 2nd ,, ,, ,,	...	2	...	...	...	...	2	...
Shafts — iron — 3rd ,, ,, ,,	...	2	...	...	...	...	2	...
Spindles, steel, with 2nd motion collars and keys	...	...	2	...	...	...	...	2
Spindles, steel, with 3rd ,, collars and keys	...	...	2	...	...	...	...	2
Wheels — bevel, 2nd motion, shaft, 40 teeth	...	2	...	...	...	...	...	...
Wheels — iron, hand	...	...	...	...	...	...	...	...
Wheels — ,, ,, with handle	...	2	...	...	...	...	2	...
Wheels — mitre, 25 teeth	...	...	...	...	...	...	4	...
Wheels — spur — 2nd motion	...	...	2	...	...	...	...	2
Wheels — spur — 3rd motion, shaft, 40 teeth	...	...	2	...	...	...	2	2
Wheels — spur — 3rd motion, ,, 54 ,,	...	2	...	...	...	...	2	...
Wheels — steel — bevel	...	...	...	...	...	...	...	...
Wheels — steel — spur	...	...	...	...	...	...	...	...

* *See* note page 862.

Digitized by Google

and Spare Parts for the same—*continued.*

8-inch.	6-inch. Disappearing.						6-inch.		5-inch.	4-inch.	Proportion of Spare.				
Barbette.	Barbette.	Mark II. P. gun.		Mark IV. gun.		Mark V. gun.	Vavasseur Central Pivot.	Barbette Central Pivot.	Siege, 6-f.. parapet.	Siege, 6-ft. parapet.	District. Per 20 guns, or any lesser No. not less than 10 of each nature.	Detached group of Sub-Districts. Per 10 guns, or lesser No. of each nature.	Sub-District. Per 10 guns, or less No. of each nature.	Fort or Battery. Per 10 guns, or less No. of each nature
Mark I.	Mark II.	Mark II.	Mark IV.	Mark II.	Mark IV.	Mark I.	Mark III.								
...	...	...	...	...	...	...	...	...	...	...	...	...	...	...	...
...	...	1	1	1	1	...	1	...	...	...	...	...	...	...	...
...	...	1	1	1	1	...	1	...	...	...	...	...	...	...	...
...	...	...	...	...	...	...	...	...	...	...	...	...	...	...	...
...	...	...	...	...	...	...	...	...	...	...	...	...	...	...	...
...	...	...	...	...	...	...	...	...	...	...	...	...	...	...	...
...	...	...	...	...	...	4	...	...	...	...	...	...	...	...	...
...	...	...	...	...	...	...	...	...	...	...	...	...	...	...	...
...	...	2	...	2	...	...	...	...	...	...	...	...	...	...	...
...	...	...	...	...	...	...	...	...	...	...	...	...	...	...	...
...	...	...	...	...	...	...	...	...	...	...	...	...	...	...	...
...	...	2	2	2	2	2	...	...	...	...	...	...	...	...	...
...	...	2	2	2	2	4	2	...	...	...	...	...	...	...	...
...	...	2	2	2	2	...	2	...	...	...	...	...	...	...	...
...	...	2	...	2	...	...	...	...	...	...	...	...	...	...	...
...	...	...	...	...

Spare B.L. Carriages and Component

Articles.	12-inch.	10-inch.					9·2	
		Disappearing.		Barbette.			Disappearing.	
	Garrison.	Mark I.	Mark II.	Mark I. C.	Mark I. D.	Mark II.	Mark I.	Mark II.
PUMPS.								
Covers, iron, with screws	...	...	4	...	...	...	...	4
Levers, clutch { left	...	...	2	...	...	...	...	2
{ right	...	...	2	...	...	...	...	2
Packings, leather (set of 26) ... ... sets	...	...	1	...	...	...	...	1
Pinions { clutch (set of 3) ... ... ,,	...	...	4	...	...	...	...	4
{ spur (set of 3) ... ... ,,	...	...	...	...	...	...	...	...
Pipes, copper, with { delivery...	...	...	2	...	...	...	...	2
connections ... { suction	...	...	1	...	...	...	...	1
Plungers, with rod, { air (set of 2) ... ... sets	...	...	1	...	...	...	...	1
pump ... ... { water	...	...	...	...	...	...	...	...
Pumps { air	...	...	1	...	...	...	...	1
{ water	...	...	1	...	...	...	...	1
Shafts { crank	...	...	2	...	...	...	...	2
{ cross	...	...	2	...	...	...	...	2
Spindles, connecting, valve, suction	...	...	2	...	...	...	...	2
Tubes, india-rubber, suction, with coupling	...	...	1	...	...	...	...	1
Valves { air	...	...	...	...	...	...	...	...
{ suction, with hand wheel and connection ...	...	...	2	...	...	...	...	2
{ water	...	...	...	...	...	...	...	...
Wheels { hand, with handles	...	...	2	...	...	...	...	2
{ spur	...	...	4	...	...	...	...	4
TACKLE, LOADING.								
Arcs, angle, steel, bar, radial	...	1	...	...	...	...	1	...
Bars, radial, steel	...	1	...	...	...	...	1	...
Blocks, metal { with fall	...	1	...	...	...	...	1	...
{ sliding	...	1	...	...	...	...	1	...
Bolts, iron, bar, radial	...	1	...	...	...	...	1	...
Brackets, steel pivot, with bolts	...	1	...	...	...	...	1	...
Plates, metal, bar radial	...	1	...	...	...	...	1	...
SHIELD.								
Pins, tay { with key { and nut, long	...	...	...	...	...	...	...	...
{ short	...	...	...	...	...	...	...	...
{ steel, with nuts and { long	...	...	...	2	4	...	...	...
{ split key ... { short ...	...	...	...	2	2	...	...	...
{ do. do. do. small ...	...	...	...	...	14	...	...	...

* *See* note page 862.

Digitized by Google

and Spare Parts for the same—*continued.*

12-inch.		8-inch.	6-inch Disappearing.					6-inch.	5-inch.	4-inch.	Proportion of Spare.			
Barbette.		Barbette.	Mark II. P. gun.	Mark IV. gun.		Mark V. gun.		Vavasseur Central Pivot.	Barbette Central Pivot.	Siege, 6-ft. parapet.	Siege, 6-ft. parapet.	District. Per 20 guns, or any lesser No. not less than 10 of each nature.	Detached group of Sub-Districts. Per 10 guns, or lesser No. of each nature.	Sub-District. Per 10 guns, or less No. of each nature.	Fort or Battery. Per 10 guns, or less No. of each nature.
Mark I. and Ia.*	Mark II.	Mark I.	Mark II.	Mark IV.	Mark II.	Mark IV.	Mark I.	Mark III.							
...	...	...	...	...	...	...	...	...	...	...	...	...	...	...	...
...	...	...	...	...	...	...	...	...	...	...	...	...	...	...	...
...	...	...	...	...	...	...	...	...	...	...	...	...	...	...	...
...	...	...	...	...	...	...	...	...	...	...	...	...	...	...	2†
...	...	...	...	...	...	...	...	...	...	...	...	...	...	...	1 set
...	...	...	...	...	...	...	...	...	...	...	...	...	...	...	1 set
...	...	...	...	...	...	...	...	...	...	...	...	...	...	...	...
...	...	...	...	...	...	...	...	...	...	...	...	...	...	...	...
...	...	...	...	...	...	...	...	...	...	...	...	...	...	...	1 set
...	...	...	...	...	...	...	...	...	...	...	...	...	...	...	1
...	...	...	...	...	...	...	...	...	...	...	...	...	...	...	...
...	...	...	...	...	...	...	...	...	...	...	...	...	...	...	...
...	...	...	...	...	...	...	...	...	...	...	...	...	...	...	...
...	...	...	...	...	...	...	...	...	...	...	...	...	...	...	1
...	...	...	...	...	...	...	...	...	...	...	...	...	...	...	1
...	...	...	...	...	...	...	...	...	...	...	...	...	...	...	1 set
...	...	...	...	...	...	...	...	...	...	...	...	...	...	...	...
...	...	...	...	...	...	...	...	...	...	...	...	...	...	...	1 set
...	...	...	...	...	...	...	...	...	...	...	...	...	...	...	...
...	...	...	...	...	...	...	...	...	...	...	...	...	...	...	...
...	...	2	...	...	...	...	...	...	...	...	...	...	...	...	...
...	...	...	...	...	...	...	...	...	...	...	...	...	...	...	...
...	...	...	...	...	...	...	...	...	...	...	...	...	...	...	...
...	...	...	...	...	...	...	...	...	...	...	...	...	...	...	...
...	...	...	...	...	...	...	...	...	...	...	...	...	...	...	...
...	...	...	...	...	...	...	...	...	...	...	...	...	...	...	...
...	...	...	...	...	...	...	...	...	...	...	...	...	...	...	...
...	...	...	...	...	...	...	...	...	...	...	...	...	...	...	...
...	...	2	...	...	...	...	...	...	2	...	...	...	...	...	...
2	...	...	...	...	...	...	...	...	2	...	...	...	...	...	...
...	...	...	...	...	...	...	...	...	...	...	...	...	...	...	...

† Per carriage.

Digitized by Google

Spare B.L. Carriages and Component

Articles.	12-inch.	10-inch.					9·2-
		Disappearing.		Barbette.			Disappearing.	
	Garrison.	Mark I.	Mark II.	Mark I.		Mark II.	Mark I.	Mark II.
				C.	D.			
Screws, iron, bracket, shield	...	...	...	...	...	...	...	...
Shields, steel, with bolts	...	...	...	1	1	...	...	...
Stays, shield, steel	...	...	...	2	8	...	...	...
PUMP, RUNNING BACK.								
Boxes, metal, stuffing, valve release	...	...	...	...	...	1	...	...
Bearings, metal { shaft, crank	...	...	...	1	1	1	...	...
{ sliding, plunger	...	...	...	1	1	1	...	...
Bushes, metal, cistern, shaft crank	...	...	...	...	...	1	...	...
Casings, metal... { front	...	...	...	1	1	1	...	...
{ rear	...	...	...	1	1	1	...	...
Cisterns, cast-iron	...	...	...	1	1	1	...	...
Covers, ,,	...	...	...	1	1	1	...	...
Glands, metal, plunger	...	...	...	2	2	2	...	...
Nuts, metal { securing pump	...	...	...	1	1	1	...	...
{ spindle, valve release	...	...	...	1	1	1	...	...
Plungers, metal	...	...	...	1	1	1	...	...
Pipes, copper, { connecting pump	...	...	...	1	1	1	...	...
with fittings { release	...	...	...	1	1	1	...	...
Plugs, metal { air	...	...	...	2	2	2	...	...
{ retaining pump	...	...	...	2	2	2	...	...
{ strainer, valve suction	...	...	...	2	2	2	...	...
{ valve, delivery	...	...	...	2	2	2	...	...
{ ,, suction	...	...	...	2	2	2	...	...
Packing, for pump (length of 50 inches)	...	lengths		1	1	1	...	...
Shafts, steel, crank	...	...	...	1	1	1	...	...
Spindles, metal, valve, release	...	...	...	1	1	1	...	...
Stops, wrought-iron pump	...	...	...	1	1	...	...	...
Studs, wrought-iron cistern	...	...	...	8	8	8	...	...
Strainers, copper, valve suction	...	...	...	2	2	2	...	...
Springs, spiral { P.B., valve, suction	...	...	...	2	2	2	...	...
{ steel, valve, delivery	...	...	...	2	2	2	...	...
Valves, metal { delivery	...	...	...	2	2	2	...	...
{ draw off	...	...	...	1	1	1	...	...
{ suction	...	...	...	2	2	2	...	...
Washers, packing, { set of 16	...	...	sets	1	1	...	...	...
leather { ,, 18	...	...	...	...	...	1	...	...
Wheels, metal, hand spindle, valve release	...	...	...	1	1	1	...	...
Unions, metal, connecting pipe, copper, release	...	...	...	...	...	1	...	...

* *See* note page 862.

Digitized by Google

and Spare Parts for the same—*continued.*

8-inch.	6-inch. Disappearing.						6-inch.		5-inch.	4-inch.	Proportion of Spare.			
Barbette.	Mark II. P. gun.		Mark IV. gun.		Mark V. gun.		Vavasseur Central Pivot.	Barbette Central Pivot.	Siege, 6-ft. parapet.	Siege, 6-ft. parapet.	District. Per 20 guns, or any lesser No. not less than 10 of each nature.	Detached group of Sub-Districts. Per 10 guns, or lesser No. of each nature.	Sub-District. Per 10 guns, or less No. of each nature.	Fort or Battery. Per 10 guns, or less No. of each nature.
Mark I. and Ia.*	Mark II.	Mark I.	Mark II.	Mark IV.	Mark II.	Mark IV.	Mark I.	Mark III.						
...	...	...	...	...	...	...	...	...	...	12	...	...	...	...
1*	...	1	...	...	...	...	...	...	...	1	...	...	...	...
2	...	2	...	...	...	...	...	...	...	2	...	...	...	...
...	1	...	...	...	...	...	...	...	...	...	...	...	...	...
1	1	...	...	...	...	...	...	...	...	...	...	...	...	...
1	1	...	...	...	...	...	...	...	...	...	...	...	...	...
...	1	...	...	...	...	...	...	...	...	...	...	...	...	...
1	1	...	...	...	...	...	...	...	...	...	...	...	...	...
1	1	...	...	...	...	...	...	...	...	...	...	...	...	...
1	1	...	...	...	...	...	...	...	...	...	...	...	...	...
1	1	...	...	...	...	...	...	...	...	...	...	...	...	...
2	2	...	...	...	...	...	...	...	...	...	...	...	...	...
1	1	...	...	...	...	...	...	...	...	...	...	...	...	...
1	1	...	...	...	...	...	...	...	...	...	...	...	...	...
1	1	...	...	...	...	...	...	...	...	...	...	...	...	...
1*	1	...	...	...	...	...	...	...	...	...	...	...	...	1
1	1	...	...	...	...	...	...	...	...	...	...	...	...	...
2	2	...	...	...	...	...	...	...	...	...	...	...	...	...
2	2	...	...	...	...	...	...	...	...	...	...	...	...	...
2	2	...	...	...	...	...	...	...	...	...	...	...	...	...
2	2	...	...	...	...	...	...	...	...	...	...	...	...	...
2	2	...	...	...	...	...	...	...	...	...	...	...	...	...
1	1	...	...	...	...	...	...	...	...	...	...	...	...	1†
1	1	...	...	...	...	...	...	...	...	...	...	...	...	...
1	1	...	...	...	...	...	...	...	...	...	...	...	...	...
1	...	...	...	...	...	...	...	...	...	...	...	...	...	...
8	8	...	...	...	...	...	...	...	...	...	...	...	...	...
2	2	...	...	...	...	...	...	...	...	...	...	...	...	...
2	2	...	...	...	...	...	...	...	...	...	...	...	...	2
2	2	...	...	...	...	...	...	...	...	...	...	...	...	2
2	2	...	...	...	...	...	...	...	...	...	...	...	...	1
1	1	...	...	...	...	...	...	...	...	...	...	...	...	1
2	2	...	...	...	...	...	...	...	...	...	...	...	...	1
1	...	...	...	...	...	...	...	...	...	...	...	...	...	2†
...	1	...	...	...	...	...	...	...	...	...	...	...	...	2†
1	1	...	...	...	...	...	...	...	...	...	...	...	...	...
...	1	...	...	...	...	...	...	...	...	...	...	...	...	...

† Per carriage.

Digitized by Google

CARRIAGES, B.L., BARBETTE, 10-INCH, MARK III.

	Component Parts.	Proportion of Spare.	
		Per Fort or Battery of 10 Guns or less.	Per Carriage.
CARRIAGES.			
Axles, roller, steel, with screws	10	2	...
Bearings, axle, roller, iron, with screw { inside	10	...	...
{ outside	10	...	...
Bearings { trunnion, steel	2	...	...
{ spindle, pinion, elevating, metal	1	...	...
Brackets, { metal, sliding, elevating gear	1	...	...
with screws, { wrought-iron securing pump, running	2	...	...
complete. { back.			
Buffers, hydraulic, complete	2	...	...
Carriage Body, without fittings	1	...	...
Derrick, pump, running back	1	...	...
Glands, hydraulic buffer, metal, piston rod { inside ...	2	...	...
{ outside ...	2	...	...
Loops, steel, bracket	4	...	...
Packings, hydraulic buffer (set of 8), consisting of—			
Washers, leather (set of 6) ... ... sets	1	...	2
Rings, leather, L section (set of 2) ... ... ,,	1	...	2
Packings, pipe, connecting hydraulic buffer (set of 4), consisting of—			
Washers, leather (set of 4) ... ... sets	1	1	...
Keys, wrought-iron, with chain securing pump, running back.	2	...	...
Pipes, connecting buffers, copper, with fittings	1	1	...
Pistons, P.B.	2	2	...
Plates { clip, with bolts	4	4	...
{ securing, axles, roller, iron, with screws ...	10	4	...
Plugs { filling hole, hydraulic buffer, iron, with chain	2	2	...
{ metal, hole, derrick, pump, running back, with chain.	1	...	...
Rods, steel, piston, with nuts	2	2	...
Rollers, carriage, steel	10	1	...
GEAR ELEVATING.			
Arc, steel, elevating	1	1	...
Cones, steel { plain	1	...	...
{ with boss	...	...	...
Discs, metal, graduated, indicator	1	...	...
Guards, metal { disc, graduated, indicator	1	...	...
{ wheel, worm { inner	1	...	...
{ outer	1	...	...
Pintons, steel, with spindle, spring, washer, and nut ...	1	1	...

Digitized by Google

Carriages, B.L., Barbette, 10-inch, Mark III—*continued.*

	Component Parts.	Proportion of spare. Per Fort or Battery of 10 Guns or less.	Per Carriage.
Pinions steel, 15 teeth, shaft: 1st motion	1	...	...
2nd ,,	1	...	...
2nd ,, worm. with long boss	1	...	...
indicator, with spindle and nuts, 45 teeth.: metal	1	...	...
steel	1	...	...
Plates, metal, indicator	1	...	...
Pointers, metal, indicator	1	...	...
Shafts, steel: 1st motion with collar and nut	1	...	...
2nd ,, ,, ,, keys	1	...	...
worm	1	...	...
Wheels: metal, worm	1	...	...
wrought-iron, hand...	1	...	...
PUMP RUNNING BACK.			
Bearings, metal: shaft crank	1	...	...
sliding plunger	1	...	...
Box, metal, stuffing valve, release	1	...	...
Bush, metal, cistern, shaft crank	1	...	...
Casing, metal: front	1	...	...
rear	1	...	...
Cisterns, cast-iron...	1	...	...
Covers, cast-iron	1	...	...
Glands, metal, plunger	2	...	...
Levers, double handed	1	...	...
Nuts, metal...: securing pump	1	...	...
spindle, valve, release	1	...	...
Packings for pump (length of 50 inches) ... lengths	1	...	1
Pipes, copper, with fittings: connecting pump	1	1	...
release	1	...	...
Plugs, metal: air	2	...	...
retaining pump...	2	...	...
strainer valve suction...	2	...	...
valve: delivery	2	...	...
valve: suction	2	...	...
Plungers, metal	1	...	...
Shafts, steel, crank	1	...	...
Spindles, metal, valve release	1	...	...
Studs, wrought-iron, cistern	8	...	...
Strainers, copper, valve, suction	2	...	...
Springs, spiral: P.B. valve suction	2	2	...
steel, valve, delivery	2	2	...
Union, metal, connecting pipe, copper, release	1	...	...
Valves, metal: delivery	2	1	...
draw off	1	1	...
suction ...	2	1	...
Washers, packing leather (set of 18)..: ... sets	1	2	...
Wheels, metal, hand, spindle, valve, release	1	...	...

Digitized by Google

GARRISON B.L. SLIDES, AND COMPONENT AND SPARE PARTS FOR SAME (12-INCH TO 6-INCH).

Articles.	12-inch Garrison.		10-inch barbette.				9·2-inch barbette		8-inch.	6-inch.		Proportion of spare for each.			
			Mark I.												
	Upper tier.	Lower tier.	"C" pivot.	"D" pivot.	Mark II.	Mark III.	Mark I. and IA.*	Mark II.	Barbette.	Vavasseur central pivot.	Barbette.	District, per 20 guns, or any lesser No. not less than 10 of each nature.	Detached group of Sub-Districts, per 10 guns, or less No. of each nature.	Sub-District, per 10 guns, or less No. of each nature.	Fort or Battery per 10 guns or less No. of each nature.
Vocabulary Section V. (1).															
Axles roller front	...	...	...	...	...	...	...	...	2	...	...	...	...	...	1
Axles roller rear, with nuts	...	...	...	...	...	...	...	...	2	...	...	...	...	...	1
Axles roller, manganese, bronze	...	...	...	...	...	...	...	...	...	24	30	...	...	...	...
Axles truck, steel with collar, and pins front	...	...	...	...	4	...	...	4	...	...	...	...	...	...	1
Axles truck, steel with collar, and pins rear	2	2	...	...	...	...	...	...	...	...	...	...	...	...	1
Axles truck, steel with collar, and pins rear	2	2	...	...	...	...	...	...	...	...	...	...	...	...	1
Axles truck, steel with nuts, and split keys front	...	...	2	2	...	...	2	...	...	...	...	...	...	...	1
Axles truck, steel with nuts, and split keys rear	...	...	2	2	...	...	2	...	...	...	...	...	...	...	1
Bolts, foundation, iron, with nuts	...	...	...	...	...	...	...	...	...	...	20	...	...	...	...
Bearings axle drum, brake gear, cast iron, with bolts	2	2	...	...	...	...	...	...	...	...	...	...	...	...	...
Bearings metal, elevating, gear, with bolts or screws screw, brake	2	2	...	...	...	...	...	...	...	...	...	...	...	...	...
Bearings metal, elevating, gear, with bolts or screws shaft 1st motion left	2	2	...	...	...	...	...	...	...	...	...	...	...	...	...
Bearings metal, elevating, gear, with bolts or screws shaft 1st motion right	...	...	...	...	1	...	...	1	...	...	...	...	...	...	...
Bearings metal, elevating, gear, with bolts or screws shaft 2nd "	2	2	...	...	1	...	...	1	...	...	...	...	...	...	...
Bearings metal, elevating, gear, with bolts or screws shaft 3rd "	1	1	...	...	...	...	...	...	...	...	...	...	...	...	...
Bearings metal, elevating, gear, with bolts or screws shaft 4th "	...	...	...	...	1	...	...	1	...	...	...	...	...	...	...

Digitized by Google

| | | |

Garrison B.L. Slides, and Component and Spare Parts for Same (12-inch to 6-inch)—*continued.*

Articles.			12-inch Garrison.		10-inch barbette.				9·2-inch barbette		8-inch.	6-inch.	Proportion of spare for each.				
			Upper tier.	Lower tier.	Mark I.		Mark II.	Mark III.	Mark I. and IA. *	Mark II.	Barbette.	Barbette.	District, per 20 guns, or any lesser No. not less than 10 of each nature.	Detached group of Sub-Districts, per 10 guns, or less No. of each nature.	Sub-District, per 10 guns, or less No. of each nature.	Fort or Battery per 10 guns or less No. of each nature.	
					"C" pivot.	"D" pivot.											
Brackets metal, with bolts or screws	iron, with bolts or screws, traversing, gear, shaft	1st motion ...	...	...	...	...	1	...	...	1	...	...	...	...	...	...	...
		2nd " front	...	...	...	...	1	...	...	1	...	...	...	...	...	...	...
		2nd " rear	...	...	...	...	1	...	...	1	...	...	...	...	...	...	...
		3rd " front ...	...	...	...	...	2	...	...	2	...	...	...	...	...	...	...
		3rd " rear left	...	...	...	...	1	...	...	1	...	...	...	...	...	...	...
		3rd " rear right	...	...	...	...	1	...	...	1	...	...	...	...	...	...	...
		4th " rear left	...	...	...	...	1	...	...	1	...	...	...	...	...	...	...
		4th " rear right	...	...	...	...	1	...	...	1	...	...	...	...	...	...	...
	adjusting, hydraulic,	levers, adjusting gear,	...	...	...	...	1	...	...	1	...	...	...	...	...	...	...
		buffer left	...	...	...	...	1	...	...	1	...	...	...	...	...	...	...
		buffer right	...	...	...	...	1	...	...	1	...	...	...	...	...	...	...
	apparatus, withdrawing	spindle, worm wheel, worm	...	1	...	...	1	...	...	1	...	...	...	...	...	...	...
		breech screw cramp ...	...	1	...	...	1	...	...	1	...	...	...	...	...	...	...
	brake, gear	shaft, cross ... left	...	1	...	...	1	...	...	...	...	...	...	...	...	...	...
		shaft, cross ... right	...	1	...	...	1	...	...	...	...	...	...	...	...	...	...
		thrust ... left	...	1	...	...	1	...	...	...	...	...	...	...	...	...	...
		thrust ... right	...	1	...	...	1	...	...	...	...	...	...	...	...	...	...
	carrying, loading, tray ...		...	1	...	...	1	...	...	...	...	...	...	...	...	...	...
	elevating gear	cramp, brake ... front	...	1	...	...	1	...	...	...	...	...	...	...	...	...	...
		shaft, 3rd motion, with caps ... rear	...	1	...	...	1	...	...	...	...	...	...	...	...	...	...
	extractor	... ...	...	...	...	...	...	...	...	...	...	...	...	...	...	...	...
	Varasseur central pivot.		...	...	...	...	...	...	...	...	...	2	...	...	...	...	...
			...	...	...	...	...	...	...	...	...	1	...	...	...	...	...

Digitized by Google

| | | |

Garrison B.L. Slides, and Component and Spare Parts for Same (12-inch to 6-inch)—*continued.*

Articles.	12-inch Garrison.		10-inch barbette.				9·2 inch barbette		8-inch.	6-inch.		Proportion of spare for each.			
	Upper tier.	Lower tier.	Mark I.		Mark II.	Mark III.	Mark I. and IA.*	Mark II.	Barbette.	Vavasseur central pivot.	Barbette.	Distrct, per 20 guns, or any lesser No. not less than 10 of each nature.	Detached group of Sub-Districts, per 10 guns, or less No of each nature.	Sub-District, per 10 guns, or less No. of each nature.	Fort or Battery per 10 guns or less No. of each nature.
			"O" pivot.	"D" pivot.											
Carriages, under, steel, trucks { front					1		1	1							
Clips, steel, holding down, with pin ...					1		1	1							
Covers, steel, live roller { in 2 pieces									1						
ring, with bolts ... { left ...									1	2	2*				
... { right ...									1						
Flanges { roller { front (in two pieces each) { left															
{ roller { front (in two pieces each) { right															
{ rear { left ...		1	1		1		1*	1							
{ rear { right ...		1	1		1		1*	1							
{ iron { front { left ...		1	2		2		2*	1							
{ iron { front { right ...		1	1		1		1	1							
{ truck { rear { left ...	1		1	1											
{ truck { rear { right ...	1		1	1											
{ steel { front { left ...		1													
{ steel { front { right ...		1													
{ steel { rear ...		1													
Frames, supporting platform, rear, steel		1													
Flaps, metal, bracket, firing key, lower		1													
Girders, M. cast steel { left ...															
{ right ...															

Digitized by Google

(EQ. R.)

| | | |

Garrison B.L. Slides, and Component and Spare Parts for Same (12-inch to 6-inch)—*continued.*

Articles.	12-inch Garrison.		10-inch barbette.			9·2-inch barbette.	8-inch.	6-inch.	Proportion of spare to each.			
	Upper tier.	Lower tier.	Mark I. "C" pivot.	Mark I. "D" pivot.	Mark II.	Mark III.	Mark I. and Ia.*	Mark II.	Barbette.	Varasseur central pivot.	Barbette.	Distrtct, per 20 guns, or any lesser No. not less than 10 of each nature.	Detached group of Sub-Districts, per 10 guns, or less No. of each nature.	Sub-District, per 10 guns, or less No. of each nature.	Fort or Battery per 10 guns, or less No. of each nature.
Screws, metal, lubricating, $\frac{5}{8}$" diam. × $\frac{3}{4}$"	1		1	1	1		1*	1	1		6				12
Slides, body, without fittings	2										1				
with nuts		2			2			2							1
Spindles, buffer { iron { with keys { front ...					2			2							1
rear ...															
steel, with nuts and split keys			2	2			2		2						
with nut and key... ...					2						2				
buffer, steel			2	2	4		2	4							2†
Springs disc, { with radius ...					36			36							2
spindle, { without radius	2					4									18*
buffer { with radius ...	2					4									1*
No. 2 { without radius	22					36			1						11*
Stages { laying, wood, with hand rail, and steps			1	1			1*								
loading, with ladder and stays ...					2			2							
Stays { block, pivot			2	2			2								
ladder, rear, W.I., with bolts and screws			2	2			2								
Standards, platform, sighting											2				
Supports, angle, steel, cover plates, with bolts (pairs)															
front, with spur wheel			2	2	2		2	2							
slide { front { No. 1	2					2									
Trucks, steel { rear { No. 51 ...					2			2							
,, 52 ...															
Transoms, M. cast steel, rear			2	2			2				1				

* For 12".

† For 6" barbette.

Articles.	12-inch Garrison.	10-inch barbette. Mark I. "C" pivot.	10-inch barbette. Mark I. "D" pivot.	10-inch barbette. Mark II.	10-inch barbette. Mark III.	9·2 inch barbette. Mark I. and IA.*	9·2 inch barbette. Mark II.	8-inch. Barbette.	6-inch. Vavasseur central pivot.	6-inch. Barbette.	Proportion of spare to each. District, per 20 guns, or any lesser No. not less than 10 of each nature.	Proportion of spare to each. Detached group of Sub-Districts, per 10 guns, or less No. of each nature.	Proportion of spare to each. Sub-District, per 10 guns, or less No. of each nature.	Proportion of spare to each. Fort or Battery per 10 guns or less No. of each nature.
APPARATUS, WITHDRAWING, BREECH-SCREW.														
Arms, steel, with collar and nut	1	...	...	...	...	...	...	...	...	...	...	...	...	...
Balls, revolving, arm, steel	17	...	...	...	...	...	...	...	...	...	...	...	...	6
Bolts adjusting, spring, lever catch, iron, with pin and key	1	...	...	...	...	...	...	...	...	...	...	...	...	...
Bolts locking, steel, with nut	1	...	...	...	...	...	...	...	...	...	...	...	...	...
Brackets metal bolt adjusting, spring, lever catch, with screws	1	...	...	...	...	...	...	...	...	...	...	...	...	...
Brackets metal bolt locking	1	...	...	...	...	...	...	...	...	...	...	...	...	...
Brackets metal screw, withdrawing, with guide locking bolt and screws	1	...	...	...	...	...	...	...	...	...	...	...	...	...
Brackets W.I., retaining arm with bracket metal spring catch	1	...	...	...	...	...	...	...	...	...	...	...	...	..
Collars, packing arm, metal*...	1	...	...	...	...	...	...	...	...	...	...	...	...	...
Handles bolt, locking, iron...	1	...	...	...	...	...	...	...	...	...	...	...	...	...
Handles screw, withdrawing, iron	1	...	...	...	...	...	...	...	...	...	...	...	...	...
Levers, catch, steel, with pins, collar and split keys ...	1	...	...	...	...	...	...	...	...	...	...	...	...	...
Plates, packing arm, metal*	1	...	...	...	...	...	...	...	...	...	...	...	...	...
Plugs, jamming, locking bolt, steel...	1	...	...	...	...	...	...	...	...	...	...	...	...	...
Screws adjusting, spring, plug, locking bolt, metal ...	1	...	...	...	...	...	...	...	...	...	...	...	...	...
Screws withdrawing, iron, with collar and nut ...	1	...	...	...	...	...	...	...	...	...	...	...	...	...
Springs bolt, retaining arm, steel	...	...	...	...	...	...	...	...	...	...	...	...	...	2
Springs spiral steel plug, locking bolt	1	...	...	...	...	...	...	...	...	...	...	...	...	2
Springs spiral steel lever catch	1	...	...	...	...	...	...	...	...	...	...	...	...	2

* For R.G.F. guns only.

Digitized by Google

Garrison B.L. Slides, and Component and Spare Parts for Same (12-inch to 6-inch)—*continued.*

Articles	12-inch Garrison.	10-inch barbette.			9·2-inch barbette	8-inch.	6-inch.	Proportion of spare to each.				
		"C" pivot.	Mark I. "D" pivot.	Mark II.	Mark III.	Mark I. and IA.*	Mark II.	Barbette.	Vavasseur central pivot.	Barbette.	District, per 20 guns, or any lesser No. not less than 10 of each nature.	Detached group of Sub-Districts, per 10 guns, or less No. of each nature.	Sub-District, per 10 guns, or less No. of each nature.	Fort or Battery per 10 guns, or less No. of each nature.
GEAR, ADJUSTING, HYDRAULIC, BUFFER.														
Levers, adjusting, rods, piston, iron, with screws	...	...	...	2	...	2	...	...	...	...	...	...	...	...
Rods, connecting, levers, adjusting, iron	...	...	...	1	...	1	...	...	...	...	...	...	...	...
Spindles, iron { wheel, worm ... ... worm	...	...	...	1	...	1	...	...	...	...	...	...	...	...
Wheels, worm, iron	...	...	...	1	...	1	...	...	...	...	...	...	...	...
GEAR, BRAKE.														
Axles, drum, brake, iron, with collar and pin ...	1	...	...	...	...	...	1	...	...	...	...	...	...	...
Bands, friction, steel { left ... ... right	1	...	...	...	...	...	...	...	...	...	...	...	...	...
Counterweights, lever brake, iron, with bolt and nut	2	...	...	...	...	...	...	...	...	...	...	...	...	...
Cramps, brake, iron ... ... { left	...	...	...	1	...	...	1	...	...	...	...	...	...	...
Drums, brake, iron, with screws { right	1	...	...	...	...	...	...	...	...	...	...	...	...	...
brake	2	...	...	...	...	...	...	...	...	...	...	...	...	...
Levers, iron { brake band ... ... front	1	...	...	...	...	...	...	...	...	...	...	...	...	...
rod, connecting, with pin { rear...	...	...	...	1	...	1	1	...	...	...	...	...	...	...
cross...	...	...	...	2	...	2	2	...	...	...	...	...	...	...
shaft { left	1	...	...	...	...	...	...	...	...	...	...	...	...	...
right	1	...	...	...	...	...	...	...	...	...	...	...	...	...

Digitized by Google

| | | |

Garrison B.L. Slides, and Component and Spare Parts for Same (12-inch to 6-inch)—*continued.*

Articles.	12-inch Garrison	10-inch barbettee. Mark I. "O" pivot.	10-inch barbettee. Mark I. "D" pivot.	10-inch barbettee. Mark II.	10-inch barbettee. Mark III.	9·2-inch barbette Mark I. and Ia.*	9·2-inch barbette Mark II.	8-inch. Barbette.	6-inch. Vavasseur central pivot.	6-inch. Barbette.	Proportion of spare to each. Distrct, per 20 guns, or any lesser No. not less than 10 of each nature.	Detached group of Sub-Districts, per 10 guns, or less No. of each nature.	Sub-District, per 10 guns, or less No. of each nature.	Fort or Battery, per 10 guns or less No. of each nature.
Pintons, steel, with spindle ... { with nut, pin and key	...	...	...	...	...	...	...	...	...	1	...	...	...	...
... ... { 2nd motion, 10 teeth	1	...	...	...	...	...	...	...	...	...	...	...	...	...
Pins, steel { connecting, block, sliding, bar, elevating, with collar and key	1	...	...	...	...	...	1	...	...	...	...	...	1	...
... ... { joint, with collar and pin, bar, elevating	...	...	...	1	...	1	...	...	...	...	...	...	1	2
Plugs, jamming, brake, steel	...	2	...	...	...	...	...	...	...	...	...	...	...	...
Pointers, metal, indicator, with bolts	...	...	...	...	...	...	...	...	...	1	...	...	...	...
Screws { metal, lubricating-hole	...	...	...	...	...	...	...	...	...	6	...	...	...	...
... ... { jamming, brake, steel, with { long	1	...	...	...	...	...	...	...	...	...	...	...	...	...
... ... { collar and nut { short	1	...	...	1	...	...	1	...	...	...	...	...	...	...
... ... { 1st motion { with collars and nuts	...	...	...	...	...	...	...	...	...	...	...	...	...	...
... ... { with coupling, collars and nuts	1	...	...	...	...	...	...	...	...	...	...	...	...	...
Shafts (iron { 2nd motion	...	...	...	1	...	...	1	...	...	...	...	...	...	...
... ... { 3rd motion { with coupling and nuts	1	...	...	1	...	...	1	...	...	...	...	...	...	...
... ... { guide, with collars and pins	...	...	...	...	...	...	...	...	...	...	...	...	...	...
... ... { 1st motion, hand, wheel, { vertical	1	...	...	...	...	...	...	...	...	1	...	...	...	...
... ... { with collar, pin and key { cross	...	...	...	...	...	...	...	...	...	1	...	...	...	...
... ... steel { 2nd motion, with collars and nuts	...	1	...	...	...	...	...	...	...	...	...	...	...	...
... ... { 4th motion, with coupling and nut	...	...	...	1	...	...	1	...	...	...	...	...	...	...
... ... { worm, 2nd motion, with collar and pin	...	...	...	...	...	...	...	...	...	1	...	...	...	...

Digitized by Google

| | | |

Garrison B.L. Slides, and Component and Spare Parts for Same (12-inch to 6-inch)—*continued.*

Articles.	12-inch Garrison.	10-inch barbette. Mark I. "C" pivot.	10-inch barbette. Mark I. "D" pivot.	10-inch barbette. Mark II.	10-inch barbette. Mark III.	9·2 inch barbette Mark I. and IA.*	9·2 inch barbette Mark II.	8-inch. Barbette.	6-inch. Varnessent central pivot.	6-inch. Barbette.	Proportion of spare to each. Distrct, per 20 guns, or any lesser No. not less than 10 of each nature.	Detached group of Sub-Districts, per 10 guns, or less No. of each nature.	Sub-District, per 10 guns, or less No. of each nature.	Fort or Battery per 10 guns or less No. of each nature.
GEAR, LOADING.														
Axles, wheel, spur, steel, with collar and split key	17	1	1			1								6
Balls, revolving, derrick, steel		1	1			1								
Blocks, sheave, derrick		1	1			1*								
Chains, derrick, with hook	1													
Derricks { iron, with sheaves and pins / loading		1	1			1								
Guards, wheel, spur { iron, with screws / with screws and pinions		1	1			1								
Handles, winch, iron, No. 28		1	1			1								
Levers, traversing, derrick, iron		1	1			1								
Pawls, steel, with bolts		1	1			1								
Pinions, steel { 1st motion, with split keys / 9 teeth, with collar and screw	1	2	2			2								3*
Pins, sheave, steel, with collar and split keys	1	2	2			2								
Shaft, iron, with collars and screws		2	2			2								
Sheaves, derrick, metal	1													
Wheels, spur { iron, 55 teeth / steel, 45 teeth, with bollard		1	1			1								
Windlass, iron	1													

Digitized by Google

| | | |

Garrison B.L. Slides, and Component and Spare Parts for Same (12-inch to 6-inch)—*continued.*

Articles.	12-inch Garrison.	10-inch barbette. Mark I. "C" pivot.	10-inch barbette. Mark I. "D" pivot.	10-inch barbette. Mark II.	10-inch barbette. Mark III.	9·2-inch barbette Mark I. and IA.*	9·2-inch barbette Mark II.	8-inch. Barbette.	6-inch. Vavasseur central pivot.	6-inch. Barbette.	Proportion of spare to each. District, per 20 guns, or any lesser No. not less than 10 of each nature.	Proportion of spare to each. Detached group of Sub-Districts, per 10 guns, or less No. of each nature.	Proportion of spare to each. Sub-District, per 10 guns, or less No. of each nature.	Proportion of spare to each. Fort or Battery, per 10 guns or less No. of each nature.
Plugs, jamming, brake, metal	...	...	...	...	...	...	...	...	4	...	...	...	4*	...
stop, for pawl, with chain	...	...	...	...	...	...	...	...	2	...	...	...	4**	...
Pins split, spindle, traversing, ·375″ × 3·0″	...	...	...	...	...	...	...	...	...	...	...	...	6†	...
taper, ·375″ × 3·0″	...	...	...	...	...	...	...	...	...	...	...	...		...
steel, shafts, traversing ·437″ × 3·5″	...	...	...	1	...	1	...	...	...	...	...	...		...
shafts, bevel 1st motion, 18 teeth	...	...	...	1	...	1	...	...	...	...	...	...		...
shafts, bevel 2nd motion, 20 teeth	...	...	...	2	...	2	...	...	...	...	...	...		...
shafts, bevel 3rd motion, 14 teeth	...	...	...	...	...	...	...	...	...	...	...	...		...
iron spur spindle, wheel, sprocket	2	...	...	...	...	...	...	...	...	...	...	...		...
spur with spindle, winch handle	2	...	...	...	...	...	...	...	...	...	...	...		...
traversing, 14 teeth	1	...	...	...	...	...	...	...	...	...	...	...		...
bevel shaft 2nd motion, 15 teeth	1	...	...	...	...	...	...	...	...	...	...	...		...
metal bevel shaft 1st motion, 10 teeth	...	...	...	...	...	...	...	...	...	1	...	...		...
Pinions spur shaft 3rd motion, 12 teeth	1	...	...	...	...	...	...	...	...	...	...	...		...
spur shaft 4th motion, 10 teeth	1	...	...	...	...	...	...	1	...	...	...	...		...
shaft, traversing	...	...	...	...	...	...	...	...	...	...	...	...		...
bevel 2nd motion, 21 teeth	...	2	2	...	...	2	...	...	...	...	...	...		...
bevel 3rd motion, 26 teeth	...	2	2	...	...	2	...	...	...	...	...	...		...
steel shaft, 2nd motion, 12 teeth	...	2	...	2	...	...	...	...	...	1	...	...		...
spur 4th motion, 10 teeth	...	...	...	...	...	2	...	...	...	...	...	...		...
shaft, 3rd motion, 11 teeth with spindle, 1st motion, with collars and split keys	...	2	2	...	...	2	...	...	...	1	...	...		...
Plates, steel, wheel, worm	...	...	...	...	...	...	...	...	...	1	...	...		...

Digitized by Google

| | | |

Garrison B.L. Slides, and Component and Spare Parts for Same (12-inch to 6-inch)—*continued.*

Articles.	12-inch Garrison.	10-inch barbette. Mark 1. "C" pivot.	10-inch barbette. Mark 1. "D" pivot.	10-inch barbette. Mark II.	10-inch barbette. Mark III.	9·2 inch barbette. Mark I. and Ia.*	9·2 inch barbette. Mark II.	8-inch. Barbette.	6-inch. Yarrassour central pivot.	6-inch. Barbette.	Proportion of spare to each. Distrct, per 20 guns, or any lesser No. not less than 10 of each nature.	Proportion of spare to each. Detached group of Sub-Districts, per 10 guns, or less No. of each nature.	Proportion of spare to each. Sub-District, per 10 guns, or less No. of each nature.	Proportion of spare to each. Fort or Battery per 10 guns or less No. of each nature.
Wheels { worm	...	...	...	...	...	...	...	1	1	...	...	...	...	...
bevel, 2nd motion, 25 teeth	...	...	...	...	...	...	...	...	...	1	...	...	...	...
metal { hand...	...	...	...	...	...	...	...	...	...	2	...	...	...	...
Worms, steel	...	...	...	...	...	...	...	...	1	...	...	...	...	1*
GEAR, PIVOT, HYDRAULIC.														
Packings, leather (set of 13) ... ... sets	...	...	...	1	...	...	1	...	...	...	...	...	...	1*
Rings, leather, L. section spindles, valve ... { suction ...	...	...	...	1	...	...	1	...	...	...	...	...	...	1*
{ release ...	...	...	...	1	...	...	1	...	...	...	...	...	...	...
GEAR, WINCH.														
Axles, wheel, serpentine	...	...	...	...	...	...	...	2	2	...	...	...	...	...
Guards, wheel, spur and pinion { left ...	...	...	...	...	...	...	...	1	1	...	...	...	...	...
{ right ...	...	...	...	...	...	...	...	1	1	...	...	...	...	...
Pinions, spindle, winch handle	...	...	...	...	...	...	...	2	2	...	...	...	...	...
Wheels, serpentine, toothed	...	...	...	...	...	...	...	2	...	...	...	...	...	...
YOKE, STEEL.														
Brackets, iron, withbolts { buffer	2	...	...	...	...	...	...	...	...	...	...	...	...	...
{ connecting, yoke ...	2	...	...	...	...	...	...	...	...	...	...	...	...	...

Digitized by Google

| | | |

SLIDES, B.L., BARBETTE, 10-INCH, MARK III.

	Component Parts.	Proportion of Spare. Per Fort or Battery of 10 Guns or less.	Proportion of Spare. Per Carriage.
Axles, truck, rear, steel, with set screw	2	1	...
Bearings, metal, with screws, shaft — elevating — 1st motion	2	...	...
elevating — 2nd motion — front	1	...	...
elevating — 2nd motion — rear	1	...	...
winch handle, traversing	2	...	...
Brackets, with bolts, or screws, complete — iron — traversing shaft — 2nd motion — front	1	...	...
iron — traversing shaft — 2nd motion — rear	1	...	...
iron — traversing shaft — 3rd motion — left	1	...	...
iron — traversing shaft — 3rd motion — right	1	...	...
iron — cartridge	1	...	...
iron — derrick — loading — lower	1	...	...
iron — derrick — loading — upper	1	...	...
iron — guide, rammer	1	...	...
iron — supporting rammer	2	...	...
metal — rod, releasing loading gear ...	1	...	...
metal — lifting gear, shaft, lever, hand — inner	1	...	...
metal — lifting gear, shaft, lever, hand — outer	1	...	...
steel, loading gear — brake	1	...	...
steel, loading gear — guide rod, releasing ...	1	...	...
Buffers — front, including bracket, springs, disc, and spindles	1	...	...
Buffers — rear, including stops, springs, disc, and spindles — left ...	1	...	...
Buffers — rear, including stops, springs, disc, and spindles — right	1	...	...
Counterweights, cast-iron, rear — left	1	...	...
Counterweights, cast-iron, rear — right	1	...	...
Gudgeons, steel, rollers, guide, with collar and key ...	6	...	...
Ladders, iron, with bolts — platform, sighting	1	...	...
Ladders, iron, with bolts — stage, loading...	1	...	...
Loops, iron, with nuts — front	2	...	...
Loops, iron, with nuts — rear	2	...	...
Plates, wrought-iron, angle, tray, loading	2	...	...
Pins, steel connecting, rear, with set screw — lower ...	2	...	...
Pins, steel connecting, rear, with set screw — upper ...	2	...	...
Pointer, No. 1, with bracket	1	...	...
Rail, wrought-iron, hand, platform sighting	1	...	...
Rollers, steel, guide	6	...	...
Spindles, buffer, steel, with nuts and split keys — front...	2	1	...
Spindles, buffer, steel, with nuts and split keys — rear ...	2	1	...
Springs, disc, steel, No. 2...	40	20	...
Stages, loading	1	...	...
Trucks, steel — front	2	...	...
Trucks, steel — rear...	2	...	...
GEAR LIFTING HYDRAULIC.			
Bands, metal, eccentric — large	1	...	...
Bands, metal, eccentric — small	1	...	...
Brackets, wrought-iron — lever, raising valve	1	...	...
Brackets, wrought-iron — pointer	1	...	...
Bush, metal, pivot	1	...	...
Cock, metal, draw off, oil tank	1	...	...
Collars, wrought-iron distance plates, guide, lever, adjusting	2	...	...
Eccentric, steel — large	1	...	...
Eccentric, steel — small	1	...	...

Digitized by Google

Slides, B.L., Barbette, 10-inch, Mark III—*continued.*

	Component Parts.	Proportion of Spare. Per Fort or Battery of 10 Guns or less.	Proportion of Spare. Per Carriage.
Guides, wrought-iron lever releasing, with pins	1	...	...
Handles, wrought-iron cock, draw off, oil tank	1	...	...
Levers, wrought-iron — connecting	1	...	...
Levers, wrought-iron — raising lever valve	1	...	...
Levers, wrought-iron — hand — adjusting, with pin ...	1	...	...
Levers, wrought-iron — hand — releasing	1	...	...
Levers, wrought-iron — hand — pump	1	...	...
Links, wrought-iron connecting, raising lever valve, with with nuts and pins	2	...	...
Packings, leather (set of 15) consisting of—			
Washers (set of 11)	1	...	2
Rings, L section (set of 2)	1	...	2
Strips, plunger (set of 2)	1	...	2
Pipes, copper, with fittings — delivery	1	...	...
Pipes, copper, with fittings — suction	1	...	...
Plates — metal, indicator	1	...	...
Plates — wrought-iron guide, lever, adjusting	1	...	...
Pointers, wrought-iron	1	...	...
Pumps, complete	1	1	...
Rods, eccentric, wrought-iron — large	1	...	...
Rods, eccentric, wrought-iron — small, with pin	1	...	...
Shafts, steel — disconnecting	1	...	...
Shafts, steel — pointer	1	...	...
Shafts, steel — crank, pump, with collar	1	...	...
Spindle, metal, valve, release	1	...	...
Studs, wrought-iron plates, guide, lever adjusting, with nuts	2	...	...
GEAR LOADING.			
Bands, steel, friction, brake drum	1	1	
Blocks, sheave, single, derrick with fall	1	...	...
Derricks, iron, with sheaves and pin — cartridge	1	...	...
Derricks, iron, with sheaves and pin — projectile ...	1	...	...
Drums, brake	1	...	...
Handles, winch, No. 7	1	...	...
Levers, iron, brake, with counterweight, bolt, stud, collar, and key	1	...	...
Pawls, steel, brake drum	2	...	...
Rods, wrought-iron releasing, with pin, collar, and key...	1	...	...
Spindles, steel — brake drum, with collars, nut, and pin ...	1	...	...
Spindles, steel — lever brake, with collars, nut, and pin ...	1	...	...
Springs, steel, pawl, brake drum	2	2	...
Wheels, metal, ratchet	1	...	...
Windlass, iron	1	...	...
GEAR TRAVERSING.			
Handles, winch, No. 7	2	2	...
Pinions, bevel, steel, shaft — winch handle, 18 teeth ...	1	...	...
Pinions, bevel, steel, shaft — 2nd motion, 20 teeth... ...	1	...	...
Shafts, steel — winch handle	1	...	...
Shafts, steel — 2nd motion	1	...	...
Shafts, steel — 3rd motion	2	...	...
Wheels, bevel, steel shaft — 2nd motion, 40 teeth	1	...	...
Wheels, bevel, steel shaft — 3rd motion, 36 teeth	2	...	...

Digitized by Google

SPARE IRON GARRISON SLIDING CARRIAGES AND

Component and spare parts.	Casemate.					Double plate, Casemate		
		Small port.						
	12·5-in., 38 tons, 7 ft. recoil, Mark II.	12·5-in., 38 tons. 7 ft. recoil, Mark II.	12·5-in., 38 tons. 6 ft. recoil.	10-in.	10-in., Mark II., low.	12·5-in., 38 tons, Mark II.	12-in., 35 tons.	11 or 12 in., 25 tons.
Vocabulary Section V. (1).								
Axles, steel roller — with nuts — long	...	...	...	...	...	...	...	...
Axles, steel roller — with nuts — short	...	...	...	...	...	...	...	...
Axles, steel roller — with split keys	...	...	...	...	...	...	...	...
Bands, iron, securing, hydraulic buffer	1	2	...	...	...	1	...	...
Bearings, with bolts or screws ... — metal — iron — axles, roller	...	...	...	...	...	...	...	...
Bearings, with bolts or screws ... — metal — iron — screw, following up — inside	...	2	2	...	...	...	...	...
Bearings, with bolts or screws ... — metal — iron — screw, following up — outside	...	2	2	...	...	...	...	...
Bearings, with bolts or screws ... — metal — axles — front roller	4	4	4	4	4	4	4	4
Bearings, with bolts or screws ... — metal — axles — roller	...	...	...	...	...	...	...	...
Bearings, with bolts or screws ... — metal — elevating gear, pinion spindle — 1st motion	...	...	...	...	...	...	...	...
Bearings, with bolts or screws ... — metal — elevating gear, pinion spindle — 2nd ,,	...	...	...	...	...	...	...	...
Bearings, with bolts or screws ... — metal — elevating gear, pinion spindle — 3rd ,,	...	...	...	...	...	...	...	...
Bearings, with bolts or screws ... — metal — elevating gear, pinion spindle — 2nd and 3rd motion	...	...	...	...	...	...	...	...
Bearings, with bolts or screws ... — metal — elevating gear, pinion spindle — left or right	...	...	...	...	...	...	...	...
Bearings, with bolts or screws ... — metal — trunnion — left	...	...	...	...	...	...	...	...
Bearings, with bolts or screws ... — metal — trunnion — right	...	...	...	...	...	...	...	...
Bearings, with bolts or screws ... — metal — nipping gear	1	2	2	...	...	1	1	...
Bearings, with bolts or screws ... — metal — screw, compressor	1	1	1	...	...	1	...	...
Bearings, with bolts or screws ... — metal — shaft — eccentric, rear	...	4	4	4	...	4	4	...
Bearings, with bolts or screws ... — metal — shaft — longitudinal	...	2	2	...	...	...	...	...
Bearings, with bolts or screws ... — metal — shaft — winch handle	...	2	2	...	...	...	...	...
Bearings, with bolts or screws ... — metal — spindle, hydraulic lift	...	2	2	...	...	...	...	...
Blocks — iron, trunnion, with loops	...	2	2	...	...	...	...	...
Blocks — wood, buffer, with bolts	1	...	...	1	1	1	1	1
Brackets, with bolts or screws ... — metal — cast-iron, shaft, winch handle, lifting gear	...	...	...	2	...	...	...	...
Brackets, with bolts or screws ... — metal — arc elevating bearing shaft, eccentric — double	...	...	...	...	...	...	...	...
Brackets, with bolts or screws ... — metal — arc elevating bearing shaft, eccentric — double, with socket for block	...	...	...	1	...	...	...	1
Brackets, with bolts or screws ... — metal — hydraulic — buffer	...	...	...	...	...	...	...	...
Brackets, with bolts or screws ... — metal — hydraulic — jack	1	...	...	...	...	1	1	...
Brackets, with bolts or screws ... — metal — jamming	1	1	1	...	...	1	...	...
Brackets, with bolts or screws ... — metal — nut, screw, compressor	...	1	1	...	...	...	...	...
Brackets, with bolts or screws ... — metal — pinion, spindle, elevating gear	...	1	1	...	...	...	...	...
Brackets, with bolts or screws ... — metal — screw — compressor	1	...	...	...	...	1	...	...
Brackets, with bolts or screws ... — metal — screw — scale — bottom	...	1	1	...	...	...	...	...
Brackets, with bolts or screws ... — metal — screw — scale — top	...	1	1	...	...	...	...	...

* The issue of spare carriages will be confined to stations abroad and not

Digitized by Google

COMPONENT AND SPARE PARTS FOR THE SAME.

Carriages.										Proportion of spare for each			
R.M.L.						Single plate, R.M.L.							
or dwarf.						Casemate.		Dwarf.					
10·4-in. barbette.	10-in.	9-in.	7 in.	8-in. elevation.	7-in., 6½ tons, 6 ft. parapet.	11 or 12 in., 25 tons.	9-in.	7-in.	9 in.	7-in.	District. per 20 guns, or any lesser No. not less than 10 of each nature.	Detached group of Sub-Districts. per 10 guns, or less No. of each nature.	Sub-District per 10 guns, or less No. of each nature.	Fort or Battery per 10 guns, or less No. of each nature.
9	...	...	...	...	...	...	...	...	...	...				
1	...	...	...	...	...	...	...	...	...	...				
...	...	...	...	1	10	...	...	...	...	...				
...	...	...	...	...	1	...	...	...	...	...				
...	...	...	...	...	20	...	...	...	...	...				
...	...	...	...	...	...	...	...	...	...	...				
20	4	4	4	...	...	...	...	...	...	...				
...	...	...	...	...	...	2	2	...	...	...				
1	...	...	...	1	...	2	...	...	...	...				
...	...	...	...	...	...	...	...	...	...	...				
...	...	...	...	...	2	...	2	2	2	2				
1	...	...	...	...	...	...	...	...	...	...				
1	...	...	...	2	...	...	...	...	...	...				
...	...	...	...	...	...	...	...	...	...	...				
...	...	...	...	...	...	...	...	...	...	...				
...	...	...	...	...	...	...	...	...	...	...				
...	...	...	...	...	...	...	...	...	...	...				
...	...	...	...	...	...	...	...	...	...	...				
...	1	1	1	2	...	1	1	1	1	1				
1	...	...	...	...	...	...	...	...	...	...				
...	...	...	1	...	...	...	...	...	...	...				
...	1	1	...	...	...	1	1	...	1	...				
...	...	...	...	1	...	...	...	...	...	...				
...	...	...	...	...	...	...	...	...	...	...				
...	...	...	...	...	...	...	...	...	...	...				
...	...	...	...	2	...	...	...	...	...	...				
...	...	...	...	...	...	...	...	...	...	...				
...	...	...	...	...	...	...	...	...	...	...				
...	...	...	...	...	...	...	...	...	...	...				

* 5 per cent., or 1 carriage complete.

no [illegible] an 1 will be allowed for less than 30 guns of the same nature.

Digitized by Google

Spare Iron Garrison Sliding Carriages and

Component and spare parts.					Double plate,							
					Casemate.					Casemate		
						Small port.						
						12·5-in., 38 tons.						
					12·5-in., 38 tons, 7 ft. recoil, Mark II.	7 ft. recoil, Mark II.	6 ft. recoil.	10-in.	10-in., Mark II., low.	12·5-in., 38 tons, Mark II.	12-in., 35 tons.	11 or 12-in., 25 tons.
Brackets, with bolts or screws ...	metal	shaft	cross	wheel, bevel, with pinion	left ...	...	...	...	1	...	...	...	...
					right ...	...	...	...	1	...	...	...	...
				nipping gear	left ...	1	1	1	...	...	1	1	...
					right	1	1	1	...	...	1	1	...
				elevating ...	front ...	...	...	...	...	...	...	...	...
					rear ...	...	...	...	...	...	...	...	...
			longitudinal	centre ...	left ...	...	...	...	1	...	...	...	...
					right	...	...	...	1	...	...	...	...
				front ...	left ...	...	1	1	...	...	...	...	...
					right	...	1	1	...	...	...	...	...
				rear	left ...	...	...	...	1	...	...	...	...
					right	...	...	...	1	...	...	...	...
				wheel, spur, and pinion ...	left ...	...	...	...	1	...	...	...	...
					right ...	...	...	...	1	...	...	...	...
				sheave block, nipping gear ...		...	1	1	...	...	...	...	...
		spindle		eccentric, nipping gear ...		1	...	...	...	...	1	1	...
				jamming, elevating ...		...	...	...	...	...	...	...	...
			worm elevating gear	front ...	left ...	...	...	...	1	1	...	...	1
					right ...	...	...	...	1	1	...	...	1
				rear ...	left ...	...	...	...	...	1	...	...	1
					right ...	...	...	...	...	1	...	...	1
				with turn-buckle, pawl, pin, and split key	left	...	...	...	1	1	...	...	1
					right	...	...	...	1	1	...	...	1
	iron			buffer		...	...	...	...	...	...	...	...
				cramp, elevating gear		1	...	...	...	...	1	1	...
				guide for chain	left	1	1	1	...	...	1	1	...
					right ...	1	1	1	...	...	1	1	...
				hydraulic buffer...		...	...	2*	2*	1	...	1	1
				pawl, retaining nipping lever...		1	1	1	...	...	1	1	...
				plates, compressor	left ...	1	...	...	...	...	1	...	...
					right ...	1	...	...	...	...	1	...	...
				rocking lever		1	2	2	...	...	1	...	...
				stop lever	hydraulic lift left ...	...	1	1	1	...	...	...	...
					right	...	...	...	1	...	...	...	...
					nipping	1	1	1	...	...	1	...	...
				steel, hydraulic buffer		...	...	...	...	...	...	...	...

Where articles are interchangeable with others on the same line

* 1 left and 1 right.

Digitized by Google

Component and Spare parts for the same—*continued.*

Carriages.										Proportion of spare for each			
R.M.L.						Single plate, R.M.L.							
or dwarf.						Casemate.		Dwarf.					
10·4-in. barbette.	10-in.	9-in.	7-in.	8 in. elevation.	7-in., 6½ tons, 6 ft. parapet.	11 or 12-in., 25 tons.	9-in.	7-in.	9-in.	7-in.	District. per 20 guns, or any lesser No. not less than 10 of each nature.	Detached group of Sub-Districts. per 10 guns, or less No. of each nature.	Sub-District. per 10 guns, or less No. of each nature.	Fort or Battery. per 10 guns, or less No. of each nature.
...	...	...	...	...	...	...	...	...	...	...	† 5 per cent., or 1 carriage complete.			
...	...	...	...	...	...	...	...	...	...	...

Spare Iron Garrison Sliding Carriages and

Component and spare parts.	Double plate, Casemate.					Double plate, Casemate		
		Small port.						
	12·5-in., 38 tons, 7 ft. recoil, Mark II.	12·5-in., 38 tons. 7 ft. recoil, Mark II.	12·5-in., 38 tons. 6 ft. recoil.	12·5-in., 38 tons. 10-in.	10-in., Mark II., low.	12·5-in., 38 tons, Mark II.	12-in., 35 tons.	11 or 12-in., 25 tons.
Buffers, hydraulic	1	...	...	...	...	...	...	...
	...	2[2]	...	...	...	...	...	...
	...	...	...	...	...	1	...	...
	...	...	...	...	...	...	...	...
	...	...	...	...	...	...	...	...
Bushes, breeching	...	...	...	...	...	...	...	...
Capsquares { metal	...	...	...	...	2	...	...	...
Capsquares { iron	2	...	...	...	...	2	2	2
Carriages, body, without fittings	1	1	1	1	1	1	1	1
Catches, iron, lever, nipping	1	...	...	...	...	1	...	...
Counterweights, iron, step, with bolt	1	...	...	...	...	1	1	...
Flanges, roller, with bolts, pairs { front	...	...	...	...	...	...	...	...
Flanges, roller, with bolts, pairs { rear	...	...	...	...	...	...	...	...
Glands, hydraulic buffer, metal { inside	...	...	...	...	...	...	...	...
Glands, hydraulic buffer, metal { outside	...	...	...	...	...	...	...	...
Guides { iron, rack elevating, with screws { front	...	1	1	...	...	...	...	...
Guides { iron, rack elevating, with screws { rear (in 2 pieces)	...	1	1	...	...	...	...	...
Guides { metal, arc elevating { left	...	...	...	...	1	...	...	1
Guides { metal, arc elevating { right	...	...	...	...	1	...	...	1
Guides { metal, arc elevating { upper and lower	...	...	...	...	...	...	...	...
Hooks, preventor rope	...	...	...	...	...	...	...	...
Keys, capsquare { with chains { No. 81	4	...	...	...	...	4	4	...
Keys, capsquare { with chains { ,, 82	...	...	...	...	...	...	...	4
Keys, capsquare { with chains { ,, 83	...	...	...	...	...	...	...	...
Keys, capsquare { with chains { ,, 84	...	...	...	...	...	...	...	...
Keys, capsquare { with chains { ,, 85	...	...	...	...	4	...	...	...
Keys, capsquare { with chains { ,, 86	...	...	...	...	...	...	...	...
Keys, capsquare { with chains { ,, 87	...	...	...	...	...	...	...	...
Keys, capsquare { with chains { ,, 88	...	...	...	...	...	...	...	...
Keys, capsquare { with chains { ,, 89	...	...	...	...	...	...	...	...
Keys, capsquare { with chains { ,, 96	...	...	...	...	...	...	...	...
Keys, capsquare { 10·4-inch	...	...	...	...	...	...	...	...
Loops, iron { bracket, with nuts { front	2	2	2	2	2	2	2	2
Loops, iron { bracket, with nuts { rear	2	2	2	2	2	2	2	2
Loops, iron { common, with nuts, side	...	...	...	...	...	...	...	...
Nuts, metal, screw, elevating	...	...	...	...	...	...	...	...
Pins { iron, step, with split key	1	...	...	...	...	1	1	...
Pins { steel, tie plate, with keys	...	6	6	...	...	...	...	...
Plates, clip { hydraulic buffer ... pairs	...	...	...	...	...	...	...	...
Plates, clip { with bolts { front ... ,,	1	1	1	1	1	1	1	1
Plates, clip { with bolts { left ... ,,	...	...	...	...	...	...	...	...
Plates, clip { with bolts { right ... ,,	...	...	...	...	...	...	...	...

Where articles are interchangeable with others on the same line,
* 1 left and 1 right.

Digitized by Google

Component and Spare parts for the same—*continued.*

Carriages.										Proportion of spare for each			
R.M.L. or dwarf.						Single plate, R.M.L.							
						Casemate.		Dwarf.					
10·4-in. barbette.	10-in.	9-in.	7-in.	8-in. elevation.	7-in., 6½ tons, 6 ft. parapet.	11 or 12-in., 25 tons.	9-in.	7-in.	9-in.	7-in.	District. per 20 guns, or any lesser No. not less than 10 of each nature.	Detached group of Sub-Districts. per 10 guns, or less No. of each nature.	Sub-District. per 10 guns, or less No. of each nature.	Fort or Battery per 10 guns, or less No. of each nature.
...	...	...	...	...	...	...	...	...	...	...	† 5 per cent., or 1 carriage complete.	...	1	
...	...	...	...	...	...	...	...	...	...	...		...	2	
1	...	...	...	...	...	...	...	...	...	...		...	1	
...	...	...	...	...	1	...	...	...	...	...		...	1	
2	...	...	...	2	...	...	...	...	...	...				
1	2	2	2	2	2	2	2	2	2	2				
...	1	1	1	1	1	1	1	1	1	1				
...	...	...	...	...	...	...	...	...	...	...				
...	...	...	...	1	...	...	...	...	...	...				
...	...	...	...	1	...	...	...	...	...	...				
1	...	...	...	...	...	...	...	...	...	...				2
1	...	...	...	...	...	...	...	...	...	...				
...	...	...	...	...	...	...	...	...	...	...				
...	1	...	...	1	1	...	...	...	...	...				
...	1	...	...	1	1	...	...	...	...	...				
2	...	...	...	...	...	...	...	...	...	...				
...	...	...	...	1	...	...	...	...	...	...				
...	...	...	...	...	...	...	...	...	...	...				
...	...	...	...	...	...	2	...	...	...	...			2	
...	4	...	...	...	...	...	...	...	...	...			2	
...	...	4	...	...	...	...	2	...	2	...			2	
...	...	...	4	...	...	...	...	2	...	2			2	
...	...	...	...	...	2	...	...	...	...	...			2	
4	...	...	...	...	...	...	...	...	...	...				1
...	2	2	2	2	2	2	2	2	2	2				
...	2	2	2	2	2	2	2	2	2	2				
...	...	...	...	...	4	...	...	...	...	...				
...	...	...	...	...	1	...	...	...	...	...				
...	...	...	...	...	...	...	...	...	...	...				
...	...	...	...	...	...	...	...	...	...	...				
...	...	...	...	1	...	...	...	...	...	...				
...	1	1	1	1	1	1	1	1	1	1				
1	...	...	...	...	...	...	...	...	...	...				1 pair
1	...	...	...	...	...	...	...	...	...	...				1 pair

for which a supply of spare is laid down, they are shown in *italics.*

† *See* Note *, page 919.

Digitized by Google

Spare Iron Garrison Sliding Carriages and

Component and spare parts.	Casemate.					Double plate, Casemate		
		Small port.						
	12·5 in., 38 tons, 7-ft. recoil, Mark II.	12·5 in., 38 tons. 7-ft. recoil, Mark II.	12·5 in., 38 tons. 6-ft. recoil.	12·5 in., 38 tons. 10-in.	10-in., Mark II., low.	12·5-in., 38 tons, Mark II.	12-in., 35 tons.	11 or 12-in., 25 tons.
Plates rear roller drop, with bolts	...	...	...	...	4	...	...	4
Plates rear roller plain	...	...	...	...	2	...	...	2
Plates rear roller with stop left	...	...	...	...	1	...	...	1
Plates rear roller with stop right	...	...	...	...	1	...	...	1
Plates tie	...	1	1	...	...	...	...	...
Plugs, steel, hydraulic buffer filling	...	...	...	...	...	...	...	...
Plugs, steel, hydraulic buffer draw off	...	...	...	...	...	...	...	...
Racks, steel, with bolts, running in and out	...	...	...	...	...	...	...	...
Rails, hand, iron, rear of carriage	...	...	...	...	...	...	...	...
Rollers, steel, carriage, No. 4	...	...	...	...	...	...	...	...
Sockets, iron, priming iron, with screws	1	1	1	1	1	1	1	1
Spindles, iron catch, lever, nipping	1	1	1	...	...	1	...	...
Steps iron, rear left	1	...	...	...	...	1	1	...
Steps iron, rear right	1	...	...	...	...	1	1	...
Steps wood, side, right	...	1	1	...	...	...	...	...
Stops bar, connecting axles, iron, with bolts	...	...	...	...	...	...	...	...
Stops lever nipping, iron, with screws	...	...	...	...	...	...	...	...
Valve piston rod, hydraulic buffer	...	...	...	...	...	...	...	...
GEAR, STOP COMPRESSOR.								
Bars, compresser, iron	2	...	...	...	...	2	...	...
Pins, iron, compressor bar, with split keys	2	...	...	...	...	2	...	...
Rings, india-rubber, 4 in. × 1 in., 1¾ in. hole	1	...	...	...	...	1	...	...
GEAR, ELEVATING.								
	...	...	...	...	...	...	...	1
	...	...	...	...	...	...	...	...
	...	...	...	...	1	...	...	...
	...	...	...	...	...	...	...	...
	...	...	...	...	...	...	...	...
Arcs, elevating, iron, left	...	...	...	...	...	...	...	...
	...	...	...	...	...	...	...	...
	...	...	...	...	...	...	...	...
	...	...	...	...	...	...	...	...
	...	...	...	...	...	...	...	...
	...	...	...	...	...	...	...	...

Where articles are interchangeable with others on the same line,

Digitized by Google

Component and Spare parts for the same—*continued.*

Carriages.											Proportion of spare for each			
R.M.L.						Single plate, R.M.L.								
or dwarf.						Casemate.			Dwarf.					
10·4-in. barbette.	10-in.	9-in.	7-in.	8-in. elevation.	7-in., 6½ tons, 6 ft. parapet.	11 or 12-in., 25 tons.	9-in.	7-in.	9-in.	7-in.	District, per 20 guns, or any lesser No. not less than 10 of each nature.	Detached group of Sub-Districts, per 10 guns, or less No. of each nature.	Sub-District, per 10 guns, or less No. of each nature.	Fort or Battery, per 10 guns, or less No. of each nature.
2	...	...	...	...	...	...	...	...	...	...	* 5 per cent., or 1 carriage complete.			
...	4	4	4	...	...	...	...	...	...	...				
...	2	2	2	...	...	...	...	...	...	...				
...	1	1	1	...	...	1	1	...	1	...				
...	1	1	1	...	...	1	1	...	1	...				
...	...	...	...	...	...	...	...	...	...	...		...	...	2
1	...	...	...	...	...	...	...	...	...	...				
1	...	...	...	...	...	...	...	...	...	...				
...	...	...	...	...	1	...	...	...	...	...				
1	...	...	...	...	...	...	...	...	...	...				
10	...	...	...	...	10	...	...	...	...	...				
...	1	1	1	1	1	1	1	1	1	1				
...	...	...	...	...	...	...	...	...	...	...				
...	...	...	...	...	...	...	...	...	...	...				
...	...	...	...	...	...	...	...	...	...	...				
...	...	...	...	2	...	...	...	...	...	...				
...	...	...	...	1	...	...	...	...	...	...				
1	...	...	...	...	...	...	...	...	...	...		...	...	2
...	...	...	...	...	...	...	...	...	...	...				
...	...	...	...	...	...	...	...	...	...	...		...	1	
...	1	...	...	...	...	...	...	...	...	...		...	1	
...	...	1	...	...	...	...	...	...	...	...		...	1	
...	...	...	1	...	...	...	...	...	...	...		...	1	
...	...	...	...	...	1	1	...	...	...	...		...	1	
...	...	...	...	...	...	...	1	...	...	...		...	1	
...	...	...	...	...	...	...	...	1	1	...		...	1	
...	...	...	...	...	...	...	...	...	...	1		...	1	
...	...	...	...	1	...	...	...	...	...	...		...	1	

for which a supply of spare is laid down, they are shown in *italics*.

* *See* Note *, page 919.

Digitized by Google

Spare Iron Garrison Sliding Carriages and

Component and spare parts.	Casemate.					Double plate, Casemate		
	12·5-in., 38 tons, 7 ft. recoil, Mark II.	Small port. 12·5-in., 38 tons. 7 ft. recoil, Mark II.	Small port. 12·5-in., 38 tons. 6 ft. recoil.	Small port. 10-in.	10-in., Mark II., low.	12·5-in., 38 tons, Mark II.	12-in., 35 tons.	11 or 12-in., 25 tons.
Arcs. elevating — iron, right	...	...	...	...	...	...	...	1
	...	...	...	...	1	...	...	...
	...	...	...	...	...	...	...	...
	...	...	...	...	...	...	...	...
	...	...	...	...	...	...	...	...
	...	...	...	...	...	...	...	...
	...	...	...	...	...	...	...	...
	...	...	...	...	...	...	...	...
	...	...	...	...	...	...	...	...
	...	...	...	...	...	1	...	...
steel	1	...	...	...	...	...	1	...
	...	...	...	...	...	...	...	...
Cams, metal	...	1	1	...	...	...	...	...
Capstan heads, with feathers, iron	...	...	...	...	...	...	...	...
Clamps, iron ... left	...	...	...	...	...	...	...	...
right	...	...	...	...	...	...	...	...
Collars — elevating screw — iron	...	3	3	...	...	...	...	...
elevating screw — leather	...	3	3	...	...	...	...	...
metal, jamming with screws... left	...	...	...	...	...	...	...	...
metal, jamming with screws... right	...	...	...	...	...	...	...	...
Cones, metal, friction with screws	...	...	...	...	...	...	...	...
Cramps, iron, brake, with screws	...	1	1	...	...	...	...	...
Elevation, indicator	1	...	...	...	...	1	1	...
Guards, metal, wheel, with screws — spur	...	1	1	1	...	...	...	...
spur and pinion	...	1	1	...	...	...	...	...
worm left	...	...	...	1	...	...	...	...
worm right	...	...	...	1	...	...	...	...
Handles, iron, brake	1	...	...	...	...	1	1	...
Levers, wrought-iron, jamming left...	...	...	...	...	...	...	...	...
right	...	1	1	...	...	...	...	...
Links, connecting iron	...	...	...	2	...	...	...	...
steel	...	1	1	...	...	...	...	...
Nuts, iron, jamming, with screw	...	1	1	...	...	...	...	...
steel, screw, elevating	...	1	1	...	...	...	...	...

Where articles are interchangeable with others on the same line,

Digitized by Google

Component and Spare parts for the same—*continued*.

Carriages.											Proportion of spare for each			
R.M.L. or dwarf.						Single plate, R.M.L.								
						Casemate.			Dwarf.					
10·4-barbette	10-in.	9-in.	7-in.	8-in. Elevation.	7-in., 6½ tons, 6 ft. parapet.	11 or 12-in., 25 tons.	9-in.	7-in.	9-in.	7-in.	District. per 20 guns, or any lesser No. not less than 10 of each nature.	Detached group of Sub-Districts. per 10 guns, or less No. of each nature.	Sub-District. per 10 guns, or less No. of each nature.	Fort or Battery. per 10 guns, or less No. of each nature.
...	...	...	...	...	...	...	...	...	...	...				
...	1	...	...	...	...	...	...	...	...	...			1	
...	...	1	...	...	...	...	...	...	...	...			1	
...	...	...	1	...	1	...	...	...	...	...			1	
...	...	...	...	...	...	1	...	...	...	...			1	
...	...	...	...	...	...	...	...	1	...	...			1	
...	...	...	...	1	...	...	...	...	...	1			1	
...	...	...	...	...	...	...	...	...	1	...			1	
1	...	...	...	...	...	...	...	...	...	...			1	
...	...	...	2	...	...	...	2	2	2	2			1	
...	...	...	1	...	...	...	1	1	1	1			1	
...	...	...	1	...	...	...	1	1	1	1			1	
...	...	...	...	1	...	...	...	...	...	...			1	
...	...	...	...	1	...	...	...	...	...	...			1	
1	...	...	...	...	...	...	...	...	...	...			1	
...	...	...	...	...	...	...	...	...	...	...			1	
1	...	...	...	2	...	...	...	...	...	...			1	
1	...	...	...	...	...	...	...	...	...	...			1	
...	...	...	...	...	...	...	...	...	...	...			1	
1	...	...	...	...	...	...	...	...	...	...			1	
...	...	...	...	1	1	...	...	...	...	...			1	
...	...	...	...	1	1	...	...	...	...	...			1	
...	...	...	...	...	...

Spare Iron Garrison Sliding Carriages and

Component and spare parts.	Casemate.					Double plate, Casemate		
		Small port.						
	12·5 in., 38 tons, 7-ft. recoil, Mark II.	12·5 in., 38 tons. 7-ft. recoil, Mark II.	12·5 in., 38 tons. 6-ft. recoil.	10-in.	10-in., Mark II., low.	12·5-in., 38 tons, Mark II.	12-in., 35 tons.	11 or 12-in., 25 tons.
Pinions: elevating, steel, with spindles: with collar and nuts: with pin 1st motion	...	...	...	...	...	...	...	...
with collar and nuts: with collar and screw: nuts	...	...	...	...	...	...	...	...
with collar and nuts: with collar and screw: screw: 2nd motion	...	...	...	...	...	...	...	...
with collar and nuts: with collar and screw: screw: 3rd ,,	...	...	...	...	...	...	...	...
with collar and nuts: with collar and pin: 2nd motion	...	1	1	...	...	1	1	...
with collar and nuts: with collar and pin: 3rd ,,	1	...	...	...	...	1	1	...
with nut and pin 2nd motion	...	...	...	...	...	...	...	...
3rd motion	...	1	1	...	...	...	...	2
with pins: 1st motion	...	...	...	...	...	...	...	...
with pins: 2nd ,,	...	...	...	...	2	...	...	...
with collar and nuts: 1st motion	...	...	...	...	...	...	...	...
with collar and nuts: 2nd ,,	...	...	...	...	...	...	...	...
with collar and nuts: 3rd ,,	...	...	...	...	...	...	...	2
bevel	1	...	...	...	...	1	1	...
left	...	1	1	...	...	...	...	...
right	...	1	1	...	...	...	...	...
bevel, iron	...	...	...	...	...	...	...	...
iron, spur, screw, scale: bottom	...	1	1	...	...	...	...	...
iron, spur, screw, scale: top	...	1	1	...	...	...	...	...
metal, bevel, 18-teeth, with screws	...	1	1	...	...	...	...	...

Where articles are interchangeable with others on the same line,
* If fitted with capstan head elevating gear.

Digitized by Google

Component and Spare parts for the same—*continued.*

Carriages.										Proportion of spare for each			
R.M.L.						Single plate, R.M.L.							
or dwarf.						Casemate.		Dwarf.					
10·4-in. barbette.	10-in.	9-in.	7-in.	8-in. Elevation.	7-in., 6½ tons, 6 ft. parapet.	11 or 12-in., 23 tons.	9-in.	7-in.	9-in.	7-in.	District, per 20 guns, or any lesser No. not less than 10 of each nature.	Detached group of Sub-Districts, per 10 guns, or less No. of each nature.	Sub-District, per 10 guns, or less No. of each nature.	Fort or Battery, per 10 guns, or less No. of each nature.
1	...	...	...	...	...	...	...	...	...	...	† 5 per cent., or 1 carriage complete.	...	1	
...	...	...	...	...	...	...	...	...	...	...		...	1	
...	...	...	...	...	...	...	...	...	...	...		...	1	
...	...	...	...	...	...	...	...	...	...	...		...	1	
1	...	...	...	...	...	...	...	...	...	...		...	1	
...	...	...	...	...	...	...	...	...	...	...		...	1	
...	...	...	...	...	...	2	...	...	...	...		...	1	
...	2	...	...	...	...	...	...	...	...	...		...	1	
...	...	...	...	...	...	2	...	...	...	...		...	1	
...	...	...	...	...	...	...	...	...	...	...		...	1	
...	...	...	...	...	...	...	...	...	...	...		...	1	
...	...	...	...	...	...	...	...	...	...	...		...	1	
...	...	...	...	...	...	...	...	...	...	...		...	1	
...	...	...	...	...	...	1*	...	...	...	...		...	1	
...	...	1*	1	...	...	...	...	...	...	...		...	1	
...	...	...	...	...	...	1*	...	...	...	...		...	1	
...	...	1*	...	...	...	...	...	...	...	...		...	1	
...	...	...	1	...	...	...	1	1	1	1		...	1	
...	...	...	...	...	...	1*	...	...	...	...		...	1	
...	...	...	...	...	...	...	1	1	1	1		...	1	
...	...	...	...	...	2	...	...	...	...	...		...	1	
...	...	...	...	...	...	...	...	...	...	...		...	1	
...	...	...	...	...	...	...	...	...	...	...		...	1	

for which a supply of spare is laid down, they are shown in *italics.*

† *See* Note*, page 919.

Digitized by Google

Spare Wrought-iron Garrison Sliding Carriages

Component and spare parts.	Double plate, Casemate.				Double plate, Casemate		
		Small port.					
	12·5-in., 38 tons, 7 ft. recoil, Mark II.	12·5-in., 38 tons. 7 ft. recoil, Mark II.	12·5-in., 38 tons. 6 ft. recoil.	10-in.	10-in., Mark II., low.	12·5-in., 38 tons, Mark II.	12-in., 35 tons.	11 or 12-in., 25 tons.
Pins. link, steel, with taper pin	...	1	1	...	...	...	...	...
connecting iron	...	...	...	2	...	...	...	...
Plates friction, brake iron / metal ... pairs	1	...	...	...	...	1	1	...
supporting screw scale, with screws	...	1	1	...	...	...	...	...
Pointers metal, elevating arc, left	...	...	...	...	...	...	...	...
with screws right	...	...	...	...	...	...	...	...
steel, elevating, arc	1	...	...	...	...	1	1	...
Racks, elevating iron left	...	...	...	1	...	...	...	...
iron right	...	...	...	1	...	...	...	...
steel	...	*1*	*1*	...	...	...	...	...
Rollers, metal, friction, with spindle, metal nuts, and steel pin	...	...	...	...	...	...	...	...
Scales, elevating iron	...	1	1	...	...	...	...	...
metal vernier, nut	...	1	1	...	...	...	...	...
metal sliding	...	1	1	...	...	...	...	...
Screws elevating, No. 51, with set screw	...	*1*	*1*	...	...	...	...	...
iron jamming, brake	1	...	...	...	...	1	1	...
iron scale, with collar and nut	...	1	1	...	...	...	...	...
Shafts, iron, with collars and nuts	...	...	...	...	...	...	...	...
Spindles, iron, with jamming	...	...	...	...	...	...	...	...
collar and nut worm left	...	...	...	1	1	...	...	1
worm right	...	...	...	1	1	...	...	1
Spring, cone, friction, steel	...	...	...	...	...	...	...	...
Washer, spring, pinion spindle	...	...	...	...	...	...	...	...
Wheels iron hand	1	1	1	...	...	1	1	...
iron spur 2nd motion 51 teeth	...	...	...	...	...	...	...	...
iron spur 2nd motion 37 ,,	1	1	1	...	...	1	1	...
iron spur 3rd ,, 47 ,,	...	1	1	...	...	...	...	...
iron spur 3rd ,, 37 ,,	1	...	...	...	...	1	1	...
metal bevel	...	...	...	...	...	...	...	...
metal hand	...	1	1	2	2	...	...	2
metal spur, 56-teeth	...	1	1	...	...	...	...	...
metal worm with friction cone and feathers left	...	...	...	1	1	...	...	...
metal worm with friction cone and feathers right	...	...	...	1	1	...	...	...
metal worm with feathers left	...	...	...	...	...	...	...	...
metal worm with feathers right	...	...	...	...	...	...	...	...
steel, spur	...	...	...	...	...	...	...	...

Where articles are interchangeable with others on the same line,

Digitized by Google

and Component and Spare parts of the same—*continued.*

Carriages.										Proportion of spare for each			
R.M.L.					Single plate, R.M.L.								
or dwarf.					Casemate.			Dwarf.					
10·4-in. barbette.	10-in.	9-in.	7-in.	Elevation, 8-in.	7-in., 6½ tons, 6 ft. parapet.	11 or 12-in., 25 tons.	9-in.	7-in.	9-in.	7-in.	District. per 20 guns, or any lesser No. not less than 10 of each nature.	Detached group of Sub-Districts. per 10 guns, or less No. of each nature.	Sub-District. per 10 guns, or less No. of each nature.	Fort or Battery. per 10 guns, or less No. of each nature.
...	...	...	...	...	...	...	...	...	...	...				
...	...	...	...	...	...	...	...	...	...	...				
...	...	...	...	...	...	...	...	...	...	...				
1	...	...	...	...	...	...	...	...	...	...				
...	...	...	...	1	...	...	...	...	...	...				
...	...	...	...	1	...	...	...	...	...	...				
...	...	...	...	...	2	...	...	...	...	...				
...	...	...	...	...	...	...	...	...	...	...				
...	...	...	...	...	...	...	...	...	...	...		...	1	
...	...	...	...	...	...	...	...	...	...	...		...	1	
...	...	...	...	...	...	...	...	...	...	...		...	1	
...	...	2	2	...	...	2	2	2	2	2				
...	...	...	...	...	...	...	...	...	...	...				
...	...	...	...	...	...	...	...	...	...	...				
...	...	...	...	...	...	...	...	...	...	...				
...	...	...	...	...	...	...	...	...	...	...				
1	...	...	...	...	...	...	...	...	...	...			1	
...	...	...	...	...	2	...	...	...	...	...				
...	...	...	...	2	...	...	...	...	...	...				
...	1	...	...	...	...	1	...	...	...	...				
...	1	1	...	...	...	1	...	...	...	...				
1	...	...	...	...	...	...	...	...	...	...				
1	...	...	...	1	...	...	...	...	...	...				1
1	...	...	...	...	...	...	...	...	...	...				
1	...	...	...	...	...	...	...	...	...	...				
...	...	...	...	...	...	...	...	...	...	...				
...	...	...	...	...	...	...	...	...	...	...				
...	...	...	...	...	...	...	...	...	...	...				
...	...	...	...	...	...	...	...	...	...	...				
...	2	2	...	2	2	2	...	...	...	...				
...	...	...	...	...	...	...	...	...	...	...				
...	1	...	...	...	...	...	...	...	...	...				
...	1	...	...	...	...	...	...	...	...	...				
...	...	1	...	...	...	...	...	...	...	...				
...	...	1	...	...	...	...	...	...	...	...				
...	...	...	...	2	...	...	...	...	...	...				

* 5 per cent., or 1 carriage complete.

for which a supply of spare is laid down, they are shown in *italics*.

* *See* Note *, page 919.

Digitized by Google

Spare Iron Garrison Sliding Carriages and

Component and spare parts.	Double plate, Casemate.					Casemate		
		Small port.						
	12·5-in., 38 tons, 7 ft. recoil, Mark II.	12·5-in., 38 tons. 7 ft. recoil, Mark II.	12·5-in., 38 tons. 6 ft. recoil.	10-in.	10-in., Mark II., low.	12·5-in., 38 tons, Mark II.	12-in., 35 tons.	11 or 12-in., 25 tons.
GEAR FOLLOWING-UP.								
Bars, iron, directing, pointer, with screw	...	1	1	...	...	...	...	...
Collars, iron, with screws, shaft ... ... { longitudinal ... ... ; winch handle ...	...	2	2	...	...	...	...	...
	...	2	2	...	...	...	...	...
Covers, iron with screws { worm, shaft, left ... ; longitudinal right ... ; worm, wheel ...	...	1	1	...	...	...	...	...
	...	1	1	...	...	...	...	...
	...	2	2	...	...	...	...	...
Guides, iron, with screws, bar directing pointer ...	...	1	1	...	...	...	...	...
Handles, iron, winch, No. 1	...	2	2	...	...	...	...	...
Keys, iron, driving, shaft	...	2	2	...	...	...	...	...
Pinions, metal, { longitudinal, 16 teeth ... ; bevel, shaft ... winch handle, 20 teeth ...	...	2	2	...	...	...	...	...
	...	2	2	...	...	...	...	...
Plates, metal. indicator, with screws	...	1	1	...	...	...	...	...
Pointers, steel, indicator	...	1	1	...	...	...	...	...
Screws, iron, following-up { left ... ... ; right	...	1	1	...	...	...	...	...
	...	1	1	...	...	...	...	...
Shafts, iron... { longitudinal { left ... ... ; right ... ; winch handle	...	1	1	...	...	...	...	...
	...	1	1	...	...	...	...	...
	...	1	1	...	...	...	...	...
Wheels, metal, worm, screw, following-up ... { left ... ... ; right	...	1	1	...	...	...	...	...
	...	1	1	...	...	...	...	...
Worms, iron, shaft, longitudinal ... { left ... ... ; right	...	1	1	...	...	...	...	...
	...	1	1	...	...	...	...	...
GEAR LIFTING.								
Bars, metal, directing, pointer, with screws	...	...	...	1	...	...	...	...
Blocks, iron, trunnion ... ... { left ... ... ; right ...	...	...	...	1	...	...	...	...
	...	...	...	1	...	...	...	...
Capsquares, iron, with loops and screws... ... ... { left ... ... ; right	...	...	...	1	...	...	...	...
	...	...	...	1	...	...	...	...
Collars, iron, with screws, shaft ... { wheel, spur, and pinion ... ; winch, handle ...	...	...	...	2	...	...	...	...
	...	...	...	4	...	...	...	...

Where articles are interchangeable with others on the same line,

Digitized by Google

Component and Spare parts for the same—*continued*.

Carriages.									Proportion of spare for each			
R.M.L.				Single plate, R.M.L.								
or dwarf.				Casemate.			Dwarf.					
10-in.	9-in.	7-in.	8-in. elevation.	11 or 12-in., 25 tons.	9-in.	7-in.	9-in.	7-in	District. per 20 guns, or any lesser No. not less than 10 of each nature.	Detached group of Sub-Districts. per 10 guns, or less No. of each nature.	Sub-District. per 10 guns, or less No. of each nature.	Fort or Battery. per 10 guns, or less No. of each nature.
...	...	...	...	...	...	...	...	...				
...	...	...	...	...	...	...	...	...				
...	...	...	...	...	...	...	...	...				
...	...	...	...	...	...	...	...	...				
...	...	...	...	...	...	...	...	...				
...	...	...	...	...	...	...	...	...				
...	...	...	...	...	...	...	...	...		...	...	1
...	...	...	...	...	...	...	...	...				
...	...	...	...	...	...	...	...	...				
...	...	...	...	...	...	...	...	...				
...	...	...	...	...	...	...	...	...		...	1	
...	...	...	...	...	...	...	...	...		...	1	
...	...	...	...	...	...	...	...	...				
...	...	...	...	...	...	...	...	...				
...	...	...	...	...	...	...	...	...				
...	...	...	...	...	...	...	...	...				
...	...	...	...	...	...	...	...	...	* 5 per cent., or 1 carriage complete.			
...	...	...	...	...	...	...	...	...				
...	...	...	...	...	...	...	...	...				
...	...	...	...	...	...	...	...	...				
...	...	...	...	...	...	...	...	...				
...	...	...	...	...	...	...	...	...				
...	...	...	...	...	...	...	...	...				
...	...	...	...	...	...	...	...	...				
...	...	...	...	...	...	...	...	...				
...	...	...	...	...	...	...	...	...				
...	...	...	...	...	...	...	...	...				
...	...	...	...	...	...	...	...	...				

for which a supply of spare is laid down, they are shown in *italics*.

* *See* Note*, page 919.

Digitized by Google

Spare Iron Garrison Sliding Carriages and

Component and spare parts.	Double plate, Casemate. 12·5-in., 38 tons, 7 ft. recoil, Mark II.	Small port. 12·5-in., 38 tons. 7 ft. recoil, Mark II.	Small port. 12·5-in., 38 tons. 6 ft. recoil.	Small port. 10-in.	Small port. 10-in., Mark II., low.	Double plate, Casemate. 12·5-in., 33 tons, Mark II.	Casemate. 12-in., 35 tons.	Casemate. 11 or 12-in., 25 tons.
Guards, metal wheel — bevel — left	...	...	...	1	...	...	...	...
bevel — right	...	...	...	1	...	...	...	...
spur and pinion — left	...	...	...	1	...	...	...	...
spur and pinion — right	...	...	...	1	...	...	...	...
Guides, iron, with screw, bar, directing pointer	...	...	...	1	...	...	...	...
Handles, winch, No. 2	...	...	...	1	...	...	...	...
Keys, iron, driving, shaft	...	...	...	6	...	...	...	...
Lifts — hydraulic, with lever, complete	...	1	1	...	...	...	...	...
packing, leather — plunger pump cap	...	1	1	...	...	...	...	...
packing, leather — ram	...	1	1	...	...	...	...	...
plungers	...	1	1	...	...	...	...	...
springs valve — inlet	...	...	...	1	...	...	...	...
springs valve — outlet	...	1	1	...	...	...	...	...
valves — inlet	...	...	...	1	...	...	...	...
valves — outlet	...	1	1	...	...	...	...	...
Pinions — bevel — iron, 11 teeth	...	...	...	2	...	...	...	...
bevel — in cast-iron or steel, 13 teeth	...	...	...	2	...	...	...	...
iron, spur, 12 teeth	...	...	...	2	...	...	...	...
Plates, metal, trunnion pointer with screws — left	...	1	1	...	...	...	...	...
right	...	1	1	...	...	...	...	...
Pointers — metal, trunnion — left	...	1	1	...	...	...	...	...
metal, trunnion — right	...	1	1	...	...	...	...	...
iron, indicator	...	...	...	1	...	...	...	...
Scales, metal, trunnion — left	...	1	1	...	...	...	...	...
Scales, metal, trunnion — right	...	1	1	...	...	...	...	...
Screws, iron, lifting — left	...	...	...	1	...	...	...	...
Screws, iron, lifting — right	...	...	...	1	...	...	...	...
Shafts — iron, cross, bevel, with pinion	...	...	...	2	...	...	...	...
iron, wheel, spur, and pinion	...	...	...	1	...	...	...	...
iron, longitudinal	...	...	...	2	...	...	...	...
steel, winch handle	...	...	...	2	...	...	...	...

Where articles are interchangeable with others on the same line,

Digitized by Google

Component and Spare parts for the same—*continued.*

Carriages.									Proportion of spare for each.			
R.M.L. or dwarf.				Single plate, R.M.L.								
				Casemate.			Dwarf.					
10-in.	9-in.	7-in.	8-in. elevation.	11 or 12-in., 25 tons.	9-in.	7-in.	9-in.	7-in.	District. per 20 guns, or any lesser No. not less than 10 of each nature.	Detached group of Sub-Districts. per 10 guns, or less No. of each nature.	Sub-District. per 10 guns, or less No. of each nature.	Fort or Battery. per 10 guns, or less No. of each nature.
...	...	...	...	...	...	...	...	...				
...	...	...	...	...	...	...	...	...				
...	...	...	...	...	...	...	...	...				
...	...	...	...	...	...	...	...	...		... ...	... ...	1
...	...	...	...	...	...	...	...	...		... ...	... ...	1
...	...	...	...	...	...	...	...	...		... ...	... ...	1
...	...	...	...	...	...	...	...	...		4		
...	...	...	...	...	...	...	...	...		2		
...	...	...	...	...	...	...	...	...		2		
...	...	...	...	...	...	...	...	...		2		
...	...	...	...	...	...	...	...	...		4

Spare Iron Garrison Sliding Carriages and

Component and spare parts.	Casemate.					Double plate, Casemate		
	12·5-in., 38 tons, 7 ft. recoil, Mark II.	Small port. 12·5 in., 38 tons. 7 ft. recoil, Mark II.	Small port. 12·5 in., 38 tons. 6 ft. recoil.	Small port. 10-in.	10-in., Mark II., low.	12·5-in., 38 tons, Mark II.	12-in., 35 tons.	11 or 12-in., 25 tons.
Wheels bevel 31 teeth	...	...	...	2	...	...	...	...
Wheels bevel and pinion, 28 and 12 teeth	...	...	...	2	...	...	...	...
Wheels spur, and bevel pinion, 36 and 13 teeth	...	...	...	2	...	...	...	...
GEAR, NIPPING.								
Blocks, nipping lever with metal sheave	...	1	1	...	...	...	...	...
Blocks, nipping with stirrup bolts nuts and collars	...	...	...	...	...	...	...	...
Collars, iron, with screws, cross, shaft	...	1	1	...	...	...	...	...
Counterweights, iron, lifting	1	...	...	...	...	1	1	...
with bolts, lever nipping	...	1	1	...	...	...	...	...
Covers, iron, with screws, pinion segment	...	1	1	...	...	...	...	...
Keys, iron, driving, shaft	2	2	2	...	...	2	2	...
Levers, iron connecting plate, sprocket, with pin, collar, and key	...	...	...	...	...	...	...	...
Levers, iron nipping, with pin	1	1	1	...	...	1	1	...
Levers, iron lifting with set screw	...	...	...	...	...	...	...	...
Levers, iron lifting with collar and split key left	1	1	1	...	...	1	1	...
Levers, iron lifting with collar and split key right	1	1	1	...	...	1	1	...
Links, iron, connecting left	2	2	2	...	...	2	2	...
Links, iron, connecting right	2	2	2	...	...	2	2	...
Pawls, iron, retaining, lever, nipping	1	1	1	...	...	1	1	...
Pinions, metal, segment, with screw left	...	1	1	...	...	...	...	...
Pinions, metal, segment, with screw right	...	1	1	...	...	...	...	...
Pins, iron, with collar and split key connecting lever	...	...	...	...	...	...	...	...
Pins, iron, with collar and split key connecting links	4	2	2	...	...	4	4	...
Pins, iron, with collar and split key rod or link, eccentric	1	...	...	...	...	1	1	...
Plates, iron guide	2	2	2	...	...	2	2	...
Plates, iron sprocket	2	2	2	...	...	...	...	...
	2	...	...	...	...	2	2	...
Rods, iron, or link, eccentric with keep screw	1	...	...	...	...	1	1	...
Shafts, iron cross	1	2*	2*	...	...	1	1	...
Spindles block nipping	...	...	...	...	...	...	...	...
Spindles iron, eccentric	1	...	...	...	...	1	1	...
Tumblers, steel, with collars and split keys	...	2	2	...	...	...	...	...

Where articles are interchangeable with others on the same line,
* 1 right and 1 left.

Digitized by Google

Component and Spare parts for the same—*continued.*

Carriages.								Proportion of spare for each			
R.M.L.				Single plate, R.M.L.							
or dwarf.				Casemate.		Dwarf.					
10-in.	9-in.	7-in.	8-in. elevation.	11 or 12-in., 25 tons.	9-in.	7-in.	9-in.	7-in.	District. per 20 guns, or any lesser No. not less than 10 of each nature.	Detached group of Sub-Districts. per 10 guns, or less No. of each nature.	Sub-District. per 10 guns, or less No. of each nature.	Fort or Battery. per 10 guns, or less No. of each nature.
...	...	...	...	...	...	...	...	...	† 5 per cent., or 1 carriage complete.			
...	...	...	...	...	...	...	...	...				
...	...	...	...	...	...	...	...	...		... ...	1	
...	...	...	1	...	...	...	...	...				
...	...	...	...	...	...	...	...	...				
...	...	...	...	...	...	...	...	...				
...	...	...	...	...	...	...	...	...				
...	...	...	...	...	...	...	...	...				
...	...	...	1	...	...	...	...	...		... ...	1	
...	...	...	...	...	...	...	...	...		... ...	1	
...	...	...	...	...	...	...	...	...				
...	...	...	...	...	...	...	...	...				
...	...	...	...	...	...	...	...	...				
...	...	...	...	...	...	...	...	...				
...	...	...	...	...	...	...	...	...				
...	...	...	...	...	...	...	...	...				
...	...	...	...	...	...	...	...	...				
...	...	...	...	...	...	...	...	...				
...	...	...	...	...	...	...	...	...		... ...	1	
...	...	...	...	...	...	...	...	...		... ...	2	
...	...	...	...	...	...	...	...	...				
...	...	...	...	...	...	...	...	...		1		
...	...	...	...	...	...	...	...	...		1		
...	...	...	1	...	...	...	...	...				
...	...	...	2	...	...	...	...	...				
...	...	...	...	...	...	...	...	...				
...	...	...	1	...	...	...	...	...				
...	...	...	1	...	...	...	...	...				
...	...	...	...	...	...	...	...	...				

for which a supply of spare is laid down, they are shown in *italics*.

† *See* Note *, page 912.

Digitized by Google

Spare Iron Garrison Sliding Carriages and

Component and spare parts.	Casemate.					Double plate, Casemate		
		Small port.						
	12·5-in., 38 tons, 7 ft. recoil, Mark II.	12·5-in., 38 tons, 7-ft. recoil, Mark II.	12·5-in., 38 tons, 6 ft. recoil.	10-in.	10-in., Mark II., low.	12·5-in., 38 tons, Mark II.	12-in., 35 tons.	11 or 12-in., 25 tons.
Gear Preventor.								
Blocks, metal, jamming	1	1	1	...	...	1	...	...
Collars, iron, adjusting compressor lever	1	...	...	...	...	1	...	...
Levers, iron — compressor	1	1	1	...	...	1	...	...
Levers, iron — rocking, with keep screw	1	1	1	...	...	1	...	...
Links, iron, connecting	...	2	2	...	...	...	...	...
Nuts, metal, compressor	1	1	1	...	...	1	...	...
Pins, iron — block, jamming	1	1	1	...	...	1	...	...
Pins, iron — link, connecting, with split key	...	1	1	...	...	...	...	...
Pins, iron — joint, rocking lever	...	1	1	...	...	...	...	...
Pins, iron — joint, rocking lever, with split key	1	...	...	...	...	1	...	...
Screws, iron compressor, with collar, nut and key	1	1	1	...	...	1	...	...
Tumblers, iron, nut, screw compressor, with collars and keys	...	1	1	...	...	...	...	...
Gear, Running-up.								
Axles, iron, roller — front, with split keys	2	...	...	...	...	2	2	...
Axles, iron, roller — rear, eccentric, with split keys	...	2	2	...	...	...	...	...
Axles, iron, roller — rear, eccentric	...	...	...	2	...	...	...	...
Axles, iron, roller — rear, eccentric	...	...	...	...	...	...	...	2
Axles, iron, roller — rear, eccentric, with split keys	...	...	...	...	...	...	...	...
Axles, iron, roller — rear, eccentric	...	...	...	2	...	...	...	...
Axles, iron, roller — rear, eccentric	...	...	...	...	...	...	...	...
Axles, iron, roller — rear, eccentric, with split keys	...	...	...	...	...	...	...	...
Axles, iron, roller — rear, eccentric	...	...	...	...	...	...	...	...
Jacks, lifting, hydraulic, rear roller, with lever and release valve	1†	1	1	...	...	1†	1†	...
Keys, wrought-iron — driving, shaft	1	1	1	...	...	1	1	...
Keys, wrought-iron — securing axles, eccentric	...	...	...	...	...	...	...	...
Levers, wrought-iron, connecting, hydraulic, rear eccentric. shaft, with pins	...	1	1	...	...	...	...	...
	1	...	...	...	...	1	1	...
Packings, leather, jack hydraulic, rear roller, set (of 11)	1	1	1	...	...	1	1	...
Pointers, steel, shaft eccentric, with screws	1	...	...	...	...	1	1	...

Where articles are interchangeable with others on the same line,
* If fitted with bar, connecting. † With spanner when fitted

Digitized by Google

Component and Spare parts for the same—*continued.*

Carriages.								Proportion of spare for each.			
R.M.L.				Single plate, R.M.L.							
or dwarf.				Casemate.		Dwarf.					
10-in.	9-in.	7-in.	8-in. elevation.	11 or 12 in., 25 tons.	9-in.	7-in.	9-in. 7-in.	District. per 20 guns, or any lesser No. not less than 10 of each nature.	Detached group of Sub-Districts. per 10 guns, or less No. of each nature.	Sub-District. per 10 guns, or less No. of each nature.	Fort or Battery. per 10 guns, or less No. of each nature.
...	...	...	...	...	...	...	...	‡ 5 per cent., or 1 carriage complete.			
...	...	...	...	...	...	...	...				
...	...	...	...	...	...	...	...				
...	...	...	...	...	...	...	...				
...	...	...	...	...	...	...	...				
...	...	...	...	...	...	...	...				
...	...	...	...	...	...	...	...				
...	...	...	...	...	...	...	...				
...	...	...	...	...	...	...	...				
...	...	...	...	...	...	...	...				
...	...	...	...	...	...	...	...				
...	...	...	...	...	...	...	...				
...	...	...	...	...	...	...	...				
...	...	...	...	...	...	...	...				
2	...	...	...	...	...	...	...				
...	...	...	...	...	...	...	...				
...	...	2	...	...	...	...	...				
...	...	...	...	...	...	...	...				
...	...	...	2	2	2	2	2				
...	...	...	...	...	...	...	...				
...	...	2*	...	...	...	2	2		1		
...	...	...	...	...	...	...	...		1		
...	...	...	...	...	...	...	...		...	...	1 per gun.
...	...	...	4	...	...	4	4				
...	...	...	...	...	...	...	...		1		
...	...	...	...	...	...	...	...		1		
...	...	...	...	...	...	...	...		...	...	2 for 38 and 35 tons.

for which a supply of spare is laid down, they are show in *italics*.
outside, lowering. ‡ *See* Note * page 919.

Digitized by Google

Spare Iron Garrison Sliding Carriages and

Component and spare parts.	Casemate.					Double plate, Casemate		
	12·5-in., 38 tons, 7 ft. recoil, Mark II.	Small port. 12·5-in., 38 tons. 7 ft. recoil, Mark II.	Small port. 12·5-in., 38 tons. 6 ft. recoil.	Small port. 10-in.	10-in., Mark II., low.	12·5-in., 38 tons, Mark II.	12-in., 35 tons.	11 or 12-in., 25 tons.
Rollers, carriage — front — No. 23	2	...	...	...	...	2	2	...
,, 24	...	2	2	...	...	...	...	...
,, 28	...	...	...	2	...	...	...	...
,, 27	...	...	...	...	2	...	...	...
,, 25	...	...	...	...	...	...	...	2
,, 29	...	...	...	...	...	...	...	...
,, 26	...	...	...	...	...	...	...	...
,, 30	...	...	...	...	...	...	...	...
Rollers, carriage — rear — ,, 67	...	2	2	...	...	...	...	...
,, 70	...	...	...	2	...	...	...	...
,, 66	2	...	...	...	...	2	2	...
,, 68	...	...	...	...	2	...	...	2
,, 71	...	...	...	...	...	...	...	...
,, 69	...	...	...	...	...	...	...	...
,, 72	...	...	...	...	...	...	...	...
Shafts, iron, eccentric, rear, double with — coupling	...	1	...	...	...	1	1	...
coupling, and split keys	...	...	...	1	...	...	...	...
	...	...	...	...	...	...	...	...
	...	...	...	...	...	...	...	1
split keys	...	...	...	...	...	...	...	...
	...	...	...	...	1	...	...	...
	...	...	...	...	...	...	...	...
	...	...	...	...	...	...	...	...
	...	...	...	...	...	...	...	...
	...	...	...	...	...	...	...	...
Sockets, iron — bar, connecting	...	...	...	...	...	...	...	...
lever, with pin and split keys — No 1, left	...	...	...	...	1	...	...	1
,, 2, right	...	...	...	...	1	...	...	1
,, 3, left	...	...	...	1	...	...	...	...
,, 4, right	...	...	...	1	...	...	...	...
,, 8	...	...	...	...	...	...	...	...
Spindles, steel, jack hydraulic, rear roller	1	1	1	...	...	1	1	...
Valves, release, jack hydraulic, rear roller	1†	...	...	...	...	1†	1†	...

Where articles are interchangeable with others on the same line,
* If fitted with bar connecting. † When the jacks are fitted with

Digitized by Google

Component and Spare parts for the same—*continued*.

Carriages.									Proportion of spare for each			
R.M.L.				Single plate, R.M.L.								
or dwarf.				Casemate.			Dwarf.					
10-in.	9-in.	7-in.	8-in. elevation.	11 or 12-in., 25 tons.	9-in.	7-in.	9-in.	7-in.	District. per 20 guns, or any lesser No. not less than 10 of each nature.	Detached group of Sub-Districts. per 10 guns, or less No. of each nature.	Sub-District. per 10 guns, or less No. of each nature.	Fort or Battery. per 10 guns, or less No. of each nature.
...	...	...	...	...	...	...	...	...				
...	...	...	...	...	...	...	...	...				
...	...	...	...	...	...	...	...	...				
2	2	...	...	...	...	...	...	...				
...	...	2	...	...	...	...	...	...				
...	...	...	2	2	2	...	2	...				
...	...	...	...	...	...	2	...	2				
...	...	...	...	...	...	...	...	...		1		
...	...	...	...	...	...	...	...	...		1		
2	2	...	...	...	...	...	...	...		1		
...	...	2	...	...	...	...	...	...		1		
...	...	...	2	2	2	...	2	...		1		
...	...	...	...	...	...	2	...	2		1		
...	...	...	...	...	...	...	...	...		1		
...	...	...	...	...	...	...	...	...		1		
...	...	...	...	...	1	...	1	...		1		
...	...	...	...	1	...	...	...	...		1		
...	...	...	...	...	...	...	...	...		1		
1	...	...	...	...	...	...	...	...		1		
...	1	...	...	...	...	...	...	...		1		
...	...	1	...	...	...	...	...	...		1		
...	...	...	1	...	...	...	...	...		1		
...	...	2*	...	...	...	...	...	...		...	...	2
1	1	1	1	1	1	...	1	...	‡ 5 per cent., or 1 carriage complete.	...	...	1
1	1	1	1	1	1	...	1	...		...	...	1
...	...	...	...	...	...	...	...	...		...	...	1
...	...	...	...	...	...	...	...	...		...	...	1
...	...	...	...	...	...	...	...	...		...	...	1
...	...	...	...	...	...	2	...	2		...	...	2
...	...	...	...	...	...	...	...	...		...	...	2 for 38 and 35 tons.
...	...	...	...	...	...	...	...	...		...	...	2

for which a supply of spare is laid down, they are shown in *italics*.
outside lowering arrangement. ‡ *See* Note *, page 919.

Digitized by Google

2. SPARE IRON TRAVERSING SLIDES L. AND

Component and spare parts.	Slides, L.																														
	Casemate, R.M.L.																														
	Small port.			To work within length.				12·5-in., 38 tons.				11 or 12-in., 25 tons.	10 in.			9-in.			Single Plate.		
	12·5-in., 38 tons.				10-in.					6 ft. recoil.																					
	7 ft. recoil.	6 ft. recoil, Marks II. and III.	10-in.	11 or 12-in., 25 tons.	Mark I.	Mark II.	Special.	9-in.	7 ft. recoil.	Marks II. and III.	Mark III. special.	Side.	Rear.	Side.	Rear.	Mark II.	Side.	Rear.	7-in.	11 or 12-in., 25 tons, to work within length.	9-in.	7-in.
Axles, roller — front	...	...	...	...	...	...	...	...	...	...	...	...	...	...	...	...	...	...	...	...	...	...
Axles, roller — rear, left	...	...	...	...	...	...	...	...	...	...	...	...	...	...	...	...	...	...	...	...	...	...
Axles, roller — rear, right	...	...	...	...	...	...	...	...	...	...	...	...	...	...	...	...	...	...	...	...	...	...
Axles, roller — rear, with nuts	...	...	...	...	...	...	...	...	...	...	...	...	...	...	...	...	...	...	...	...	...	...
Axles, steel, truck with — nut and key — front	2	2	...	...	...	...	...	...	2	2	2	...	...	...	...	...	...	...	...	...	...	...
Axles, steel, truck with — nut and key — rear	2	2	...	...	...	...	...	...	2	2	2	...	...	...	...	...	...	...	...	...	...	...
Axles, steel, truck with — collars and keys — plain, front	...	...	2	...	...	...	...	...	...	...	...	2	2	...	...	...	...	...	2	...	...	...
Axles, steel, truck with — collars and keys — front or rear	...	...	...	...	...	...	...	...	...	...	...	...	...	...	...	...	...	...	...	...	...	...
Axles, steel, truck with — collars and keys — bevel wheel, rear	...	...	2	...	...	...	...	...	...	...	...	2	2	...	...	...	...	...	2	...	...	...
Axles, steel, truck with — nut and key — plain, front or rear	...	...	...	...	...	...	...	...	...	...	...	...	...	...	...	...	...	...	...	...	...	...
Axles, steel, truck with — nut and key — bevel wheel, front	...	...	...	...	...	...	...	...	...	...	...	...	...	...	...	...	...	...	...	...	...	...
Axles, steel, truck with — nut and key — bevel wheel, rear	...	...	...	...	...	...	...	...	...	...	...	...	...	...	...	...	...	...	...	...	...	...
Axles, steel, truck with — nuts — plain, front	...	...	2	...	2	2	2	...	...	...	...	...	...	2	2	2	...	...	...	...	...	...
	...	...	...	...	...	...	...	2	...	...	...	...	...	...	...	...	2	2	‡4	...	‡4	‡4
	...	...	...	...	...	...	...	...	...	...	...	...	...	...	...	...	...	...	...	...	...	...
	...	...	...	...	...	...	...	...	...	...	...	...	...	...	...	...	...	...	...	...	...	...
	...	...	...	...	...	...	...	...	...	...	...	...	...	...	...	...	...	...	...	...	...	...
Axles, steel, truck with — nuts — bevel wheel, front	...	...	...	...	...	...	...	...	...	...	...	...	...	...	...	...	...	...	...	...	...	...
	...	...	...	...	...	...	...	...	...	...	...	...	...	...	...	...	...	...	...	...	...	...
	...	...	2	...	2	...	...	...	...	...	...	...	2	2	...	...	...	...	...	...	...	...
Axles, steel, truck with — nuts — bevel wheel, rear	...	...	...	...	...	2	...	...	...	...	...	...	...	...	2	...	...	...	...	...	...	...
	...	...	...	...	...	...	2	...	...	...	...	...	...	...	...	...	...	...	...	...	...	...
	...	...	...	...	...	...	...	2	...	...	...	...	...	...	...	...	2	2	...	...	...	...
	...	...	...	...	...	...	...	...	...	...	...	...	...	...	...	...	...	...	...	...	...	...
Bands, Iron, securing, hydraulic buffer — front	...	2	2	1	1	1	1	1	...	...	...	1	1	1	1	1	1	1	1	1	1	1
Bands, Iron, securing, hydraulic buffer — rear	...	2	2	1	1	...	...	1	...	...	...	1	1	1	1	...	1	1	1	1	1	1
Bars, pivot, iron ...	...	...	...	...	...	...	...	...	...	...	...	...	...	...	...	...	...	...	...	...	...	...
Bearings, metal — flange, shaft, cross ... plain	...	...	...	...	1	...	...	...	...	...	...	...	...	...	...	1	...	...	...	...	...	...
Bearings, metal — flange, shaft, cross ... with cap	...	...	...	...	1	...	...	...	...	...	...	...	...	...	...	1	...	...	...	...	...	...
Bearings, metal — screw, adjusting, lever, clutch	...	...	...	...	...	...	...	...	...	...	1	...	...	...	...	...	...	...	...	...	...	...
Bearings, metal — screw, compressor ...	...	...	...	...	...	...	...	...	1	1	1	...	...	...	...	...	...	...	...	...	...	...
Bearings, metal — screw, tightening chain	...	...	...	...	...	...	...	...	...	...	...	...	...	...	...	...	...	...	...	...	...	...

Where articles are interchangeable with others on the same line,
* Front also. † Rear also.
** The issue of spare slides will be confined to stations abroad, and not

Digitized by Google

COMPONENT AND SPARE PARTS FOR THE SAME.

| Slides L. | | |

Spare Iron Traversing Slides, L and

Component and spare parts.	Slides, L. Casemate, R.M.L. Small port. 12·5-in., 38 tons. 7 ft. recoil.	6 ft. recoil, Marks II. and III.	To work within length. 10-in.	11 or 12-in, 25 tons.	10-in. Mark I.	Mark II.	Special.	9-in	12·5-in., 38 tons. 7 ft. recoil.	6 ft. recoil. Marks II. and III.	Mark III. special.	11 or 12-in., 25 tons. Side.	Rear.	10-in. Side.	Rear.	Mark II.	9-in. Side	Rear.	7-in.	Single Plate. 11 or 12-in., 25 tons, to work within length	9-in.	7-in.
Bearings, metal, shaft — 1st motion	...	...	...	...	...	...	...	...	...	...	...	...	...	...	...	...	...	...	...	...	...	...
2nd ,,	...	...	...	...	...	1	...	...	1	...	...	2	...	...	...	...	...	...	...	...	...	...
3rd ,,	...	...	...	...	...	...	...	...	...	...	...	...	...	...	...	...	...	...	...	...	...	...
winch left	...	...	...	1	1	1	...	1	...	...	...	...	...	...	...	...	...	...	...	1	...	...
handle right	...	...	...	1	1	1	...	1	...	...	...	...	...	...	...	...	...	...	...	1	...	...
cross ...	...	...	...	...	...	...	...	...	...	...	...	...	...	...	...	...	...	...	...	...	...	...
Blocks, iron, with metal sheaves, snatch, 5-inch, for loading tackle with shackles	2	2	...	...	...	...	...	...	2	2	2	...	...	...	...	...	...	...	...	...	...	...
	...	...	2	...	2	...	...	...	...	...	...	2	2	2	2	...	...	...	...	...	...	...
	...	...	2	...	...	2	2	...	...	...	...	...	...	...	...	2	...	...	...	...	...	...
	...	...	...	...	...	...	...	...	...	...	...	...	...	...	...	...	...	...	...	2	...	...
Bollards, wood...	...	...	...	...	...	...	...	...	...	...	...	...	...	...	...	...	...	...	1	...	1	1
Bolts, wrought-iron, flange, with collars and nuts ... ... front	...	...	...	...	...	...	...	...	...	...	...	...	...	...	...	...	...	...	...	...	...	...
rear	...	...	...	...	...	...	...	...	...	...	...	...	...	...	...	...	...	...	...	...	...	...
Box, grease, half round, 3 lb.	1	1	...	1	...	...	...	...	1	1	1	1	1	...	...	...	...	...	...	1	...	...
Brackets, cast-iron, with bolts or screws — derrick, loading	...	...	...	...	...	...	...	...	...	...	...	...	...	...	...	...	...	...	...	...	...	...
gudgeon, front, sprocket wheel	...	...	...	...	...	...	...	...	...	...	...	...	...	...	...	...	...	...	...	...	...	...
guide, roller	...	...	...	...	...	...	...	...	...	...	...	...	...	...	...	...	...	...	...	...	...	...
lever clutch	...	...	...	1	1	1	1	1	1	1	1	1	1	1	1	1	1	1	1...	1	...	...
running-back, with metal sheave, pin, and split key	...	...	...	...	...	1	1	...	...	...	...	...	...	...	...	1	...	...	...	...	...	...
shaft — 2nd motion ...	...	...	...	2	...	1	...	...	...	...	...	...	...	...	...	...	...	...	...	...	...	...
3rd ,, ...	...	...	...	...	...	...	1	...	...	...	...	...	...	...	...	...	...	...	...	...	...	...
bollard front	...	...	...	...	...	1	1	...	...	...	...	...	...	...	...	1	...	...	...	...	...	...
bollard rear	...	...	...	1	1	1	1	1	...	...	...	1	1	1	1	1	1	1	1...	1	...	...
clutch pinion and wheel sprocket — inside left	1	1	...	...	...	...	...	...	1	1	1	...	...	...	...	...	...	...	...	...	...	...
inside right	1	1	...	...	...	...	...	...	1	1	1	...	...	...	...	...	...	...	...	...	...	...
outside left	1	1	...	...	...	...	...	...	1	1	1	...	...	...	...	...	...	...	...	...	...	...
outside right	1	1	...	...	...	...	...	...	1	1	1	...	...	...	...	...	...	...	...	...	...	...
inside ...	...	...	...	...	...	...	...	...	...	...	...	...	...	...	...	...	...	...	...	...	...	...
outside left ...	...	...	...	...	...	...	...	...	...	...	...	...	...	...	...	...	...	...	...	...	...	...
right ...	...	...	...	...	...	...	...	...	...	...	...	...	...	...	...	...	...	...	...	...	...	...
cross centre ...	...	...	...	2	...	...	...	...	...	...	...	2	2	...	...	...	...	...	...	2	...	...
cross left ...	...	...	...	1	1	1	1	1	...	...	...	1	1	1	1	1	1	1	...	1	...	...
cross right ...	...	...	...	1	1	1	1	1	...	...	...	1	1	1	1	1	1	1	...	1	...	...
longitudinal long centre ...	...	...	...	...	...	...	...	...	...	...	...	...	...	...	...	...	...	...	...	...	...	...
long front ...	...	...	...	...	...	...	...	...	...	...	...	...	...	...	...	...	...	...	...	...	...	...
long rear ...	...	...	...	...	...	...	...	...	...	...	...	...	...	...	...	...	...	...	...	...	...	...
short front ...	...	...	...	...	...	...	...	1	...	...	...	...	...	...	...	...	...	...	...	...	...	...
short rear ...	...	...	...	...	...	...	...	...	...	...	...	...	...	...	...	...	...	...	...	...	...	...

Where articles are interchangeable with others on the same line,

Digitized by Google

Component and Spare parts for the same—*continued.*

R.M.L. 10·4-in. barbette.	11 or 12-in., 25 tons.	10-in.	9-in.	7-ft. parapet, C, R.M.L.	Slides, L. Dwarf, R.M.L. 12·5-in., 38 tons.	12-in., 35 tons.	11 or 12-in., 26 tons.	10-in.			9-in.			7-in.			Single Plate.	8-in. elevation.	7-in., 6½ tons, 6 ft. parapet.	Proportion of spare for each District. per 20 guns, or any lesser No. not less than 10 of each nature.	Detached group of Sub-Districts. per 10 guns, or less No. of each nature.	Sub-District. per 10 guns, or less No. of each nature.	Fort or Battery. per 10 guns, or less No. of each nature.
					C / D	C	Rear.	Central.	Side.	Side.	Rear.	Central.	Side.	Side.	Rear.	Central.	Side.	Side.	A	C	D	9-in.	7-in.					
1																							2	2	2			
					1	1	1																	2				
	1				1	1	1					1												1				
	2	1																									
		2	2		2	2		2	2	2	2	2	2	2														
							2																					
																			1	1	1	1	1					
																								2				
	2	1			1	1	1	1	1	1														1	2			
		2	2																									
	1	1	1		2	2																						
					1	2*	1	1	1	1	1	1	1	1	1	1	1	1										
											1																	
							1	1	1	1	1	1	1	1	1	1	1	1										
					1	1																						
					1	1	1																					

Spare Iron Traversing Slides, L and

Slides, L.

Casemate, R.M.L.

Component and spare parts.	Small port. 12·5-in. 38 tons. 7 ft. recoil.	Small port. 12·5-in. 38 tons. 6 ft. recoil, Marks II. and III.	Small port. 10-in.	To work within length. 11 or 12-in., 25 tons.	To work within length. 10-in. Mark I.	To work within length. 10-in. Mark II.	To work within length. 10-in. Special.	To work within length. 9-in.	12·5-in., 38 tons. 7 ft. recoil.	12·5-in., 38 tons. 6 ft. recoil. Marks II. and III.	12·5-in., 38 tons. 6 ft. recoil. Mark III. special.	11 or 12-in. 25 tons. Side.	11 or 12-in. 25 tons. Rear.	10-in. Side.	10-in. Rear.	10-in. Mark II.	9-in. Side.	9-in. Rear.	7-in.	Single Plate. 11 or 12-in., 25 tons, to work within length.	Single Plate. 9-in.	Single Plate. 7-in.
Brackets, with bolts, or screws — iron — shaft — traversing — front	...	...	...	...	...	...	...	...	...	...	...	...	...	...	...	...	...	...	...	...	...	...
traversing — rear	1	1	...	...	...	...	...	...	1	1	1	...	...	...	...	...	...	...	...	...	...	...
wheels, sprocket — centre	...	...	...	...	...	...	...	...	...	...	...	...	...	...	...	...	...	...	...	...	...	...
wheels, sprocket — left	1	1	...	...	...	...	...	...	1	1	1	...	...	...	...	...	...	...	...	...	...	...
wheels, sprocket — right	1	1	...	...	...	...	...	...	1	1	1	...	...	...	...	...	...	...	...	...	...	...
winch handle — centre	...	...	...	...	...	...	...	...	...	...	...	...	...	...	...	...	...	...	...	...	...	...
winch handle — front	...	...	...	...	...	...	...	...	...	...	...	...	...	...	...	...	...	...	...	...	...	...
winch handle — left	...	...	1	...	...	...	1	...	1	1	1	1	...	1	1	1	1	...	...	...	...	...
winch handle — right	...	...	1	...	...	...	1	...	1	1	1	1	...	1	...	1	1	...	...	...	...	...
spindle — 2nd motion	...	...	...	...	...	...	...	...	...	...	...	...	...	...	...	1	...	...	...	...	...	...
spindle — gudgeon	...	...	...	...	...	...	1	...	...	...	...	...	...	...	...	...	...	...	...	...	...	...
spindle — pinion, front	...	...	...	...	1	...	...	...	...	...	...	...	...	...	...	...	...	...	...	...	...	...
spindle — winch handle — left	1	1	...	...	...	...	...	...	...	...	...	...	...	...	...	...	...	...	...	...	...	...
spindle — winch handle — right	1	1	...	...	...	...	...	...	...	...	...	...	...	...	...	...	...	...	...	...	...	...
spindle — wheels, spur and pinion — left	1	1	...	...	...	...	...	...	...	...	...	...	...	...	...	...	...	...	...	...	...	...
spindle — 2nd motion — right	1	1	...	...	...	...	...	...	...	...	...	...	...	...	...	...	...	...	...	...	...	...
supporting brackets, pointer	1	1	1	1	1	1	1	1	1	1	1	1	1	1	1	1	1	1	1	1	...	...
top, front, bollard shaft	...	...	...	...	...	...	...	...	...	...	...	...	...	...	...	...	...	...	...	...	...	...
fork, tightening chain — left	1	1	...	...	...	...	...	...	1	1	1	...	...	...	...	...	...	...	...	...	...	...
fork, tightening chain — right	1	1	...	...	...	...	...	...	1	1	1	...	...	...	...	...	...	...	...	...	...	...
indicator	1	1	...	...	...	...	...	...	1	1	1	...	...	...	...	...	...	...	...	...	...	...
pinion, spindle, winch, handle	...	...	...	...	...	...	...	...	...	...	...	...	...	...	...	...	...	...	...	...	...	...
pointer	1	1	1	1	1	1	1	1	1	1	1	1	1	1	1	1	1	1	1	1	...	...
running in and out gear, shaft 1st and 2nd motion	...	...	...	...	...	...	...	...	...	...	...	...	...	...	...	...	...	...	...	...	...	...
running in and out gear, clutch	...	...	...	...	...	...	...	...	...	...	...	...	...	...	...	...	...	...	...	...	...	...
metal — running lever — iron-pointed pairs	...	...	2	2	2	2	2	2	...	...	...	2	2	2	2	2	2	2	2	2	2	2
running back — block with metal sheave, pin, and split key	...	...	1	1	1	...	...	1	...	...	...	1	1	1	1	...	1	1	...	1	...	...
screw, adjusting lever clutch — left	1	1	...	...	...	...	...	...	1	1	...	...	...	...	...	...	...	...	...	...	...	...
screw, adjusting lever clutch — right	1	1	...	...	...	...	...	...	1	1	1	...	...	...	...	...	...	...	...	...	...	...
shaft — 2nd motion	...	...	...	...	1	...	...	1	2	2	...	...	...	...	...	...	...	...	...	2	...	...
shaft — 3rd motion — front	...	...	...	1	...	...	...	...	...	...	...	...	...	...	...	...	...	...	...	1	...	...
shaft — 3rd motion — rear	...	...	...	1	...	...	...	...	...	...	...	...	...	...	...	...	...	...	...	1	...	...
shaft — 3rd motion — left	...	...	...	...	1	...	...	1	...	...	...	...	...	...	...	...	...	...	...	...	...	...
shaft — 3rd motion — right	...	...	...	...	1	...	...	1	...	...	...	...	...	...	...	...	...	...	...	...	...	...
bollard, front	...	...	1	1	1	...	...	1	...	...	...	1	1	1	1	...	1	1	...	1	...	...
cross, inside	...	...	...	...	...	...	...	...	...	...	...	...	...	...	...	...	...	...	...	...	...	...

Where articles are interchangeable with others on the same line,

Digitized by Google

Component and Spare parts for the same—*continued*.

Slides, L.

| R.M.L. 10·4-in. barbette. | | |

Spare Iron Traversing Slides L and

Component and spare parts.	Slides, L. Casemate, R.M.L. Small port. 12·5-in., 38 tons. 7 ft. recoil.	6 ft. recoil, Marks II. and III.	10-in.	To work within length. 11 or 12-in., 25 tons.	10-in. Mark I.	Mark II.	Special	9-in	12·5-in., 38 tons. 7 ft. recoil.	6 ft. recoil. Marks II. and III.	Mark III. special.	11 or 12-in., 25 tons. Side.	Bear.	10-in. Side.	Rear.	Mark II.	9-in. Side.	Rear.	7-in.	Single Plate. 11 or 12-in., 25 tons, to work within length	9-in.	7-in.
Brackets, metal, with bolts or screws — shaft — cross left	...	...	...	...	...	...	...	...	...	...	...	...	...	...	...	...	...	...	...	...	...	...
shaft — outside right	...	...	...	...	...	...	...	...	...	...	...	...	...	...	...	...	...	...	...	...	...	...
shaft — brake	...	...	...	...	...	...	...	...	...	...	...	...	...	...	...	...	...	...	...	...	...	...
shaft — longitudinal, rear	...	...	...	...	...	...	...	1	...	...	...	...	...	...	...	...	...	...	...	...	...	...
shaft — training front	...	...	...	...	...	...	...	...	...	...	...	...	...	...	...	...	...	...	...	...	...	...
shaft — training rear	...	...	...	...	...	...	...	...	...	...	...	...	...	...	...	...	...	...	...	...	...	...
shaft — traversing front	1	1	...	...	...	...	...	...	1	1	1	...	...	...	...	...	...	...	...	...	...	...
shaft — traversing 1st, 2nd, and 3rd motion	...	...	...	...	...	...	...	...	...	...	...	...	...	...	...	...	...	...	...	...	...	...
shaft — winch handle ...	...	...	...	...	...	...	...	...	...	...	...	...	1	...	1	...	...	1	...	...	...	...
spindle pinion, rear ...	...	...	...	...	1	...	...	...	...	...	...	...	...	...	...	...	...	...	...	...	...	...
spindle wheel sprocket	...	...	...	...	...	...	...	...	...	...	...	...	...	...	...	...	...	...	...	...	...	...
thrust	...	...	...	...	...	...	...	...	2	2	2	...	...	...	...	...	...	...	...	...	...	...
winch handles pairs	2	2	...	...	...	...	...	...	2	2	2	...	...	...	...	...	...	...	...	...	...	...
Brackets, iron — with bolts or screws — bar, preventor ...	4	4	...	...	...	...	...	...	1	1	1	...	...	...	...	...	...	...	...	...	...	...
with bolts or screws — compressor plates left	...	...	...	...	...	...	...	...	1	1	1	...	...	...	...	...	...	...	...	...	...	...
with bolts or screws — compressor plates right	...	...	...	...	...	...	...	...	1	1	1	...	...	...	...	...	...	...	...	...	...	...
with bolts or screws — drip pan... ...	...	2	...	...	...	...	...	...	...	...	...	...	...	...	...	...	...	...	...	...	...	...
with bolts or screws — guide, lever clutch	...	...	1	1	1	1	1	...	...	...	...	1	1	1	1	1	1	...	1	...	...	...
with bolts or screws — hydraulic buffer	...	...	...	...	...	...	...	...	...	...	...	...	...	...	...	...	...	...	...	...	...	...
with bolts or screws — lever clutch ...	...	...	...	...	...	...	...	...	...	...	...	...	...	...	...	...	...	...	...	...	...	...
with bolts or screws — lever ,, with collar and key ..	1	1	...	...	...	...	...	...	...	...	...	...	...	...	...	...	...	...	...	...	...	...
with bolts or screws — lever hydraulic jack front ...	1	1	...	...	...	...	...	...	1	1	1	...	...	...	...	...	...	...	...	...	...	...
with bolts or screws — lever hydraulic jack rear ...	1	1	...	...	...	...	...	...	1	1	1	...	...	...	...	...	...	...	...	...	...	...
with bolts or screws — running back gear ...	...	...	...	...	1	...	...	1	...	...	...	...	...	1	1	...	1	1	...	...	...	...
side-arms front double	...	...	1	1	1	1	1	...	...	...	...	1	1	1	1	...	1	1	1	1	1	1
side-arms front single	...	...	...	...	...	...	...	...	...	...	...	...	...	...	...	1	...	...	...	...	...	...
side-arms rear double	...	...	...	1	...	1	1	...	...	...	...	1	1	...	...	...	...	...	...	1	...	...
side-arms rear single rammer	...	...	1	...	1	...	...	...	...	...	...	...	...	1	1	1	1	1	1	...	1	1
side-arms rear single sponge	...	...	1	...	1	...	...	...	...	...	...	...	...	1	1	1	1	1	1	...	1	1
with bolts — stop, compressor lever	...	...	...	...	...	...	...	...	1	1	1	...	...	...	...	...	...	...	...	...	...	...
with bolts — tripper, with collar and split key	1	1	...	...	...	...	...	...	1	1	1	...	...	...	...	...	...	...	...	...	...	...
Brackets, steel, rod, piston ...	...	...	...	...	...	...	...	...	...	...	...	...	...	...	...	...	...	...	...	...	...	...
	...	2	...	...	...	...	...	...	...	...	...	...	...	...	...	...	...	...	...	...	...	...
	...	...	...	...	...	1	1	...	...	...	...	...	...	...	...	1	...	...	...	...	...	...
Buffers, hydraulic ...	...	...	...	1	...	...	...	...	...	...	...	1	1	...	...	...	...	...	...	1	...	...
	...	...	...	...	1	...	...	...	...	...	...	...	...	1	1	...	...	...	...	...	...	...
	...	...	2	...	...	...	...	...	...	...	...	...	...	...	...	...	...	...	...	...	...	...
	...	...	...	...	...	...	...	1	...	...	...	...	...	...	...	1	1	...	...	...	1	...
	...	...	...	...	...	...	...	...	...	...	...	...	...	...	...	...	...	1	...	...	...	1

Where articles are interchangeable with others on the same line,

Digitized by Google

Component and Spare parts for same—*continued.*

R.M.L. 10·4-in. barbette.	11 or 12-in., 25 tons.	10-in.	9-in.	7-ft. parabet, C, R.M.L.	12·5-in., 38 tons.	12-in., 35 tons.	11 or 12-in., 25 tons	10-in.			9-in.			7 in.				Single Plate.	8-in. elevation.	7-in., 6½ tons, 6 ft. parapet.
					Marks II. and III.															
					C	L	C	Rear.	Central.	Side.	Side.	Rear.	Central.	Side.	Side.	Rear.	Central.	Side.	Side.	A	C	D	9-in.	7-in.		
1									1											4	
					2	2															
					2	2														1	
					1	1															
					1	1															
					1	1															
								1	1	1	1	1	1	1	1	1	1	1			1
														1							1
															1						
		1	1						1	1	1	1	1	1	1	1	1	1			
	1	1	1						1	1	1	1	1	1	1	1	1	1	1	1	1
	1	1	1						1	1	1	1	1				1	1	1	1	
															1	1					
					1	1									1	1	1	1	1	1	1
					1	1															
1																					
							1														
	1							1	1	1	1	1	1								
		1																			

Spare Iron Traversing Slides, L and

Component and spare parts.	Slides, L.																								
	Casemate, R.M.L.																								
	Small port.			To work within length.					12·5 in., 38 tons.			11 or 12-in., 25 tons.	10-in.			9-in.			Single Plate.						
	12·5-in., 38 tons.					10-in.																			
	7 ft. recoil.	6 ft. recoil, Marks II. and III.	10-in.	11 or 12 in., 25 tons.	Mark I.	Mark II.	Special.	9-in.	7 ft. recoil.	Marks II. and III.	6 ft recoil. Mark III., special.	Side.	Rear.	Side.	Rear.	Mark II.	Side.	Rear.	7-in.	11 or 12-in., 25 tons, to work within length.	9-in.	7-in.			
Buffers front including stop, with felt rings, spindles, and keys ... left	...	...	...	...	...	...	...	...	...	...	...	...	...	...	...	...	...	...	...	...	...	...			
front including stop, with felt rings, spindles, and keys ... right	...	...	...	...	...	...	...	...	...	...	...	...	...	...	...	...	...	...	...	...	...	...			
front including wood, block, with iron disc springs, spindles, and keys ... ... rings	1	1	...	...	...	...	...	...	...	...	...	...	...	...	...	...	...	...	...	...	...	...			
front including wood, block, with iron disc springs, spindles, and keys ... ... angle bar	...	...	1	1	1	...	...	1	1	1	1	1	1	1	1	...	1	1	1	1	1	1			
front including stop, with felt rings, spindles, and keys	...	...	...	...	...	1	1	...	...	...	...	...	...	...	...	1	...	...	...	...	...	...			
rear including stop, with felt ring, spindle, and key ... right	...	...	1	1	1	...	...	1	1	1	1	1	1	1	1	...	1	1	1	1	1	1			
rear including stop, with felt ring, spindle, and key ... left	...	...	1	1	1	...	...	1	1	1	1	1	1	1	1	...	1	1	1	1	1	1			
rear including felt rings, spindles, and keys	...	...	...	...	...	1	1	...	...	...	...	...	...	...	...	1	...	...	...	...	...	...			
rear including wood block, with bolts, and disc springs ...	1	1	...	...	...	...	...	...	...	...	...	...	...	...	...	...	...	...	...	...	...	...			
rear including stop, with springs, spindles, nuts, and keys	...	...	...	...	...	...	...	...	...	...	...	...	...	...	...	...	...	...	...	...	...	...			
Catches, metal, pointer ...	...	...	...	...	...	1	...	...	...	...	...	...	...	...	...	1	...	...	...	...	...	...			
Derricks, iron, loading, with bearer	...	...	...	...	...	...	...	...	...	...	...	...	...	...	...	...	...	...	...	...	...	...			
Flanges, rollers front left ...	...	...	...	...	...	...	...	...	...	...	...	...	...	...	...	...	...	...	...	...	...	...			
Flanges, rollers front right ...	...	...	...	...	...	...	...	...	...	...	...	...	...	...	...	...	...	...	...	...	...	...			
Flanges, rollers rear... left ...	...	...	...	...	...	...	...	...	...	...	...	...	...	...	...	...	...	...	...	...	...	...			
Flanges, rollers rear... right ...	...	...	...	...	...	...	...	...	...	...	...	...	...	...	...	...	...	...	...	...	...	...			
Flanges, trucks steel front ...	...	...	...	...	...	...	...	...	...	...	...	...	...	...	...	...	...	...	...	...	...	...			
Flanges, trucks steel rear ...	...	...	...	...	...	...	...	...	...	...	...	...	...	...	...	...	...	...	...	...	...	...			
Flanges, trucks iron, prs. rear front left ...	1	1	1	1	1	1	1	1	1	1	1	1	1	1	1	1	1	1	1	1	1	1			
Flanges, trucks iron, prs. rear front right	1	1	1	1	1	1	1	1	1	1	1	1	1	1	1	1	1	1	1	1	1	1			
Flanges, trucks iron, prs. rear rear left ...	1	1	1	1	1	1	1	1	1	1	1	1	1	1	1	1	1	1	1	1	1	1			
Flanges, trucks iron, prs. rear rear right	1	1	1	1	1	1	1	1	1	1	1	1	1	1	1	1	1	1	1	1	1	1			
Ladders, side	...	...	...	...	...	...	...	...	...	...	...	...	...	...	...	...	...	...	...	...	...	...			
Loops, iron with nuts front ...	2	2	2	2	2	2	2	2	2	2	2	2	2	2	2	2	2	2	2	2	2	2			
Loops, iron with nuts rear ...	2	2	2	2	2	2	2	2	2	2	2	2	2	2	2	2	2	2	2	2	2	2			
Loops, iron with plate, rear ...	...	...	...	...	...	...	...	...	...	...	...	...	...	...	...	...	...	...	...	...	...	...			
Pads, elastic, buffer, rear pieces	5	5	...	...	...	...	...	...	...	...	...	...	...	...	...	...	...	...	...	...	...	...			
Pans, drip, zinc, gland ...	...	2	2	1	1	1	1	1	...	...	...	1	1	1	1	1	1	1	1	1	1	1			
Pans, drip, zinc, hydraulic buffer run off cock	...	2	...	...	...	...	...	...	...	...	...	...	...	...	...	...	...	...	...	...	...	...			
Pins, bar, pivot, steel, with split key...	...	...	...	...	...	...	...	...	...	...	...	...	...	...	...	...	...	...	...	...	...	...			

Where articles are interchangeable with others on the same line,

Digitized by Google

Component and Spare parts for the same—*continued.*

| Slides, L. | | |

Spare Iron Traversing Slides, L and

Component and spare parts.	Slides, L. Casemate, R.M.L. Small port. 12·5-in., 38 tons. 7 ft. recoil.	6 ft. recoil, Marks II. and III.	10-in.	To work within length. 11 or 12-in., 25 tons. 10-in. Mark I.	Mark II.	Special.	9-in.	12·5-in., 38 tons. 7 ft. recoil.	6 ft. recoil. Marks II. and III.	Mark III. special.	11 or 12-in., 25 tons. Side	Rear.	10-in. Side.	Rear.	Mark II.	9 in. Side.	Rear.	7-in.	Single Plate. 11 or 12-in., 25 tons, to work within length.	9-in.	7-in.
Plates, joint bar pivot ...	...	...	...	...	...	...	...	...	...	...	...	...	...	...	...	...	...	...	...	...	...	...
Plates, friction, metal, with bolts and screws prs.	...	...	...	...	...	...	...	...	...	...	...	...	...	...	...	...	...	...	...	...	...	...
Platforms, wood, rear, moveable	...	...	1	1	1	1	1	...	...	...	1	1	1	1	1	1	1	1	1	1	1	1
Planks, wood, centre, complete ... ... set	1	1	...	1	1	...	...	1	1	1	1	1	1	1	1	...	?	1	1	1	1	1
Pointers, steel	1	1	1	1	1	1	1	†1	†1	1	1	1	1	1	1	1	1	1	1	1	...	...
Posts, hand	...	...	1	2	2	1	1	2	1	1	1	2	2	2	2	1	2	2	2	2	2	2
Rings, buffer indiarubber 4½-in. × 2½-in., 1½-in. hole§	...	...	7	7	7	7	7	...	8	8	8	7	7	7	7	7	...	...	...	7	...	...
Rings, buffer indiarubber 4½-in. × ½-in., 1½-in. hole	28	28	...	...	...	...	...	...	...	...	...	...	...	...	...	...	...	...	...	...	...	...
Rings, buffer indiarubber 3½-in. × 2-in., 1 7/16-in. hole‡	...	...	...	...	...	...	6	...	...	...	...	...	...	...	...	6	6	6	...	6	6	
Rings, iron	24	24	...	...	...	...	...	...	...	...	...	...	...	...	...	...	...	...	...	...	...	...
Rollers, No. 34, front ...	...	...	...	...	...	...	...	...	...	...	...	...	...	...	...	...	...	...	...	...	...	...
Slide L ,, 70, rear ...	...	...	...	...	...	...	...	...	...	...	...	...	...	...	...	...	...	...	...	...	...	...
Slide, L, body, without fittings	1	1	1	1	1	1	1	1	1	1	1	1	1	1	1	1	1	1	1	1	1	1
Sockets, lever, No. 8 ...	...	...	...	...	...	...	...	...	...	...	...	...	...	...	...	...	...	...	...	...	...	...
Spindles, iron, buffer, with keys ... ... front	...	...	...	...	...	...	...	...	...	...	...	...	...	...	...	...	...	...	...	...	...	...
front	...	...	...	...	...	...	...	6	6	6	...	...	...	...	...	...	...	...	...	...	...	...
front	4	4	...	...	...	...	...	...	...	...	...	...	...	...	...	...	...	...	...	...	...	...
front	...	...	5	5	5	...	...	...	...	...	...	5	5	5	5	...	...	...	...	5	...	...
front	...	...	...	...	...	5	5	...	...	...	...	...	...	...	...	5	...	...	...	...	...	...
front or rear	...	...	...	...	...	...	...	4	...	...	...	...	...	...	...	...	4	4	4	...	4	4
front or rear	...	...	...	...	...	...	...	...	...	...	...	...	...	...	...	...	...	...	...	...	...	...
rear ...	...	...	2	2	2	...	...	...	2	2	2	...	2	2	2	2	...	...	...	2	...	...
rear ...	...	...	...	...	...	2	2	...	...	...	...	...	...	...	...	2	...	...	...	...	...	...
rear ...	...	...	...	...	...	...	...	2	...	...	...	...	...	...	...	...	2	2	2	...	2	2
Spindles, bollard, with bolt collar and nut	...	...	...	...	...	...	...	...	...	...	...	...	...	...	...	...	...	...	...	...	...	...
Springs, disc, No. 2 with radius	3	3	...	...	...	...	...	...	...	...	...	...	...	...	...	...	...	...	...	...	...	...
disc, No. 2 without ,,	45	45	...	...	...	...	...	...	...	...	...	...	...	...	...	...	...	...	...	...	...	...
spindle ,, 3	52	52	56	56	...	...	...	64	64	64	56	56	56	56	56	5	...	...	...	56	...	...
buffer ,, 6	...	...	...	...	...	...	...	...	...	...	...	...	...	...	...	...	42	42	...	...	42	...
Stages, loading	...	...	...	...	...	...	...	...	...	...	...	...	...	...	...	...	...	...	...	...	...	...
Steps, complete iron ... rear ...	...	...	...	...	...	...	...	...	...	...	...	...	...	...	...	...	...	...	...	...	...	...
iron ... side left ...	...	...	...	...	...	...	...	...	...	...	...	...	...	...	...	...	...	...	...	...	...	...
iron ... side right ...	...	...	...	...	...	...	...	...	...	...	...	...	...	...	...	...	...	...	...	...	...	...
iron ... side stirrup ...	...	...	...	...	...	...	...	...	...	...	...	...	...	...	...	...	...	...	...	...	...	...
wood ... rear ...	1	1	...	...	...	...	...	1	1	1	...	...	...	...	...	...	...	...	...	...	...	...
wood ... sighting ...	...	...	1	2	2	1	1	2	3	3	3	2	2	2	1	1	2	2	1	2	2	1
wood ... side left ...	...	...	...	...	...	...	1	...	...	...	...	...	...	...	...	...	...	...	...	...	...	...
wood ... side right ...	...	...	...	...	...	...	1	...	...	...	...	...	...	...	...	...	...	...	...	...	...	...

Where articles are interchangeable with others on the same line,
† If for use on turntables, 1 left and 1 right of each.

Digitized by Google

Component and Spare parts for the same—*continued.*

| Slides, L. | | |

Spare Iron Traversing Slides, L and

Component and spare parts.	Slides, L. Casemate, R.M.L.																										
	Small port.			To work within length.					12·5-in., 38 tons.			11 or 12-in., 25 tons.	10-in.			9-in.		Single Plate.									
	12·5-in., 38 tons.			11 or 12-in., 25 tons.	10-in.																						
	7 ft. recoil.	6 ft. recoil, Marks II. and III.	10-in.		Mark I.	Mark II.	Special.	9 in.	7 ft. recoil.	6-ft. recoil. Marks II. and III.	6-ft. recoil. Mark III. special.	Side.	Rear.	Side.	Rear.	Mark II.	Side	Rear.	7-in.	11 or 12-in., 25 tons, to work within length.	9-in.	7-in.						
Straps, leather, 26-in. × 1-in.	1	1	...	1	...	...	...	...	1	1	1	1	1	...	...	...	...	...	...	1	...	...					
Tanks, iron, sponge	...	...	1	1	1	1	1	1	...	...	...	1	1	1	1	1	1	1	1	1	1	1					
Trucks steel plain front	2	2	2	2	2	2	2	...	2	2	2	2	2	2	2	2	...	...	...	2	...	...					
Trucks steel plain rear	2	2	...	...	...	...	...	...	2	2	2	...	...	...	...	...	...	...	...	...	...	...					
Trucks steel with bevel wheel ... front	...	...	...	...	...	...	...	...	...	...	...	...	...	...	...	...	...	...	...	...	...	...					
Trucks steel with bevel wheel ... rear	...	...	2	2	2	2	2	...	...	...	...	2	2	2	2	2	...	...	...	2	...	...					
Trucks iron plain front	...	...	...	...	...	...	...	2	...	...	...	...	...	...	...	...	2	2	2	...	2	2					
Trucks iron plain rear	...	...	...	...	...	...	...	...	...	...	...	...	...	...	...	...	...	...	2	...	2	2					
Trucks iron with bevel wheel front	...	...	...	...	...	...	...	...	...	...	...	...	...	...	...	...	...	...	...	...	...	...					
Trucks iron with bevel wheel rear ...	...	...	...	...	...	...	...	2	...	...	...	...	...	...	...	...	2	2	...	...	...	...					
APPARATUS, WASHING-OUT.																											
Blocks, chain tackle (Weston) ... ... pair	...	...	...	...	...	...	...	...	...	...	...	...	...	...	...	...	...	...	...	...	...	...					
Brackets, metal guide rods with bolts	...	...	...	...	...	...	...	...	...	...	...	...	...	...	...	...	...	...	...	...	...	...					
Connections, metal, cylinder	...	...	...	...	...	...	...	...	...	...	...	...	...	...	...	...	...	...	...	...	...	...					
Cylinders, with ram	...	...	...	...	...	...	...	...	...	...	...	...	...	...	...	...	...	...	...	...	...	...					
Glands, metal, inner... ...	...	...	...	...	...	...	...	...	...	...	...	...	...	...	...	...	...	...	...	...	...	...					
Glands, metal, cylinder outer... ...	...	...	...	...	...	...	...	...	...	...	...	...	...	...	...	...	...	...	...	...	...	...					
Packings, leather, swivel, pipes	...	...	...	...	...	...	...	...	...	...	...	...	...	...	...	...	...	...	...	...	...	...					
Stops, buffer, consisting of 3 elastic pads with parting plates	...	...	...	...	...	...	...	...	...	...	...	...	...	...	...	...	...	...	...	...	...	...					
GEAR, LOADING.																											
Blocks, derrick, loading top, with sheaves and shackle ...	...	...	...	...	...	...	...	...	...	...	...	...	...	...	...	...	...	...	...	...	...	...					
Blocks, derrick, loading bottom, with hook...	...	...	...	...	...	...	...	...	...	...	...	...	...	...	...	...	...	...	...	...	...	...					
Brackets, iron, with bolts or screws connecting-tube, loading, with bearings, spindles, and screws, adjusting... ... left.	...	...	...	...	...	...	...	...	...	...	...	...	...	...	...	...	...	...	...	...	...	...					
Brackets, iron, with bolts or screws connecting-tube, loading, with bearings, spindles, and screws, adjusting... ... right	...	...	...	...	...	...	...	...	...	...	...	...	...	...	...	...	...	...	...	...	...	...					
Brackets, iron, with bolts or screws supporting derrick top ...	...	...	...	...	...	...	...	...	...	...	...	...	...	...	...	...	...	...	...	...	...	...					
Brackets, iron, with bolts or screws supporting derrick bottom	...	...	...	...	...	...	...	...	...	...	...	...	...	...	...	...	...	...	...	...	...	...					
Brackets, iron, with bolts or screws supporting tube, loading ...	...	...	...	...	...	...	...	...	...	...	...	...	...	...	...	...	...	...	...	...	...	...					
Brackets, iron, with bolts or screws sheave, rammer, rope ...	...	...	...	...	...	...	...	...	...	...	...	...	...	...	...	...	...	...	...	...	...	...					
Brackets, iron, with bolts or screws rollers, guide top ...	...	...	...	...	...	...	...	...	...	...	...	...	...	...	...	...	...	...	...	...	...	...					
Brackets, iron, with bolts or screws rollers, guide bottom.	...	...	...	...	...	...	...	...	...	...	...	...	...	...	...	...	...	...	...	...	...	...					
Brackets, iron, with bolts or screws chain winch, lifting, with sheave pin, collar, and key	...	...	...	...	...	...	...	...	...	...	...	...	...	...	...	...	...	...	...	...	...	...					

Where articles are interchangeable with others on the same line,

Digitized by Google

Component and Spare parts for the same—*continued.*

| | Slides, L. | | |

Spare Iron Traversing Slides, L and

Component and spare parts.	Slides, L. Casemate, R.M.L. Small port. 12·5-in., 38 tons. 7 ft. recoil.	6 ft. recoil, Marks II. and III.	10-in.	To work within length. 11 or 12-in., 25 tons.	10-in. Mark I.	Mark II.	Special.	9-in.	12·5-in., 38 tons. 7 ft. recoil.	6 ft. recoil. Marks II. and III.	Mark III. special.	11 or 12-in., 25 tons. Side.	Rear.	10-in. Side.	Rear.	Mark II. Side.	Rear.	9-in. 7-in.	Single Plate. 11 or 12-in. 25 tons, to work within length.	9-in.	7-in.
Cradles { cartridge	...	...	...	...	...	...	...	...	...	...	...	...	...	...	...	...	...	...	...	...	...
{ projectile	...	...	...	...	...	...	...	...	...	...	...	...	...	...	...	...	...	...	...	...	...
Derricks, loading	...	...	...	...	...	...	...	...	...	...	...	...	...	...	...	...	...	...	...	...	...
Handles, winch, No. 30	...	...	...	...	...	...	...	...	...	...	...	...	...	...	...	...	...	...	...	...	...
Pinions, spur, with spindle, 1st motion, 15 teeth	...	...	...	...	...	...	...	...	...	...	...	...	...	...	...	...	...	...	...	...	...
Rammers, wood	...	...	...	...	...	...	...	...	...	...	...	...	...	...	...	...	...	...	...	...	...
Ropes, steel wire { long	...	...	...	...	...	...	...	...	...	...	...	...	...	...	...	...	...	...	...	...	...
{ short	...	...	...	...	...	...	...	...	...	...	...	...	...	...	...	...	...	...	...	...	...
Sheaves, rope, with pin	...	...	...	...	...	...	...	...	...	...	...	...	...	...	...	...	...	...	...	...	...
Spindles, rollers, { top	...	...	...	...	...	...	...	...	...	...	...	...	...	...	...	...	...	...	...	...	...
guide ... ... { bottom	...	...	...	...	...	...	...	...	...	...	...	...	...	...	...	...	...	...	...	...	...
Stops, buffer rammer, consisting of 1 bracket, 4 elastic pads, parting plates, and spindle, with nut and split key	...	...	...	...	...	...	...	...	...	...	...	...	...	...	...	...	...	...	...	...	...
Supports, tube, loading wood, with bolts	...	...	...	...	...	...	...	...	...	...	...	...	...	...	...	...	...	...	...	...	...
Tubes, rammer	...	...	...	...	...	...	...	...	...	...	...	...	...	...	...	...	...	...	...	...	...
Wheels, spur, 103 teeth, with spindles, drum, and brake	...	...	...	...	...	...	...	...	...	...	...	...	...	...	...	...	...	...	...	...	...
GEAR, STOP. COMPRESSOR.																					
Counterweights, cast-iron, with screw	...	...	...	...	...	...	...	...	1	1	1	...	...	...	...	...	...	...	...	...	...
Levers, iron, screw, compressor	...	...	...	...	...	...	...	...	1	1	1	...	...	...	...	...	...	...	...	...	...
Nuts, metal, { adjusting	...	...	...	...	...	...	...	...	1	1	1	...	...	...	...	...	...	...	...	...	...
screw ... { compressor	...	...	...	...	...	...	...	...	1	1	1	...	...	...	...	...	...	...	...	...	...
Pads, elastic, parting, compressor plates	...	...	...	...	...	...	...	...	2	2	2	...	...	...	...	...	...	...	...	...	...
Pawls, iron, compressor lever	...	...	...	...	...	...	...	...	1	1	1	...	...	...	...	...	...	...	...	...	...
Pins, iron, compressor plates, with split keys	...	...	...	...	...	...	...	...	2	2	2	...	...	...	...	...	...	...	...	...	...
Plates, iron, compressor	...	...	...	...	...	...	...	...	2	2	2	...	...	...	...	...	...	...	...	...	...
Screws, iron { adjusting ...	...	...	...	...	...	...	...	...	1	1	1	...	...	...	...	...	...	...	...	...	...
{ compressor, with collar and nut	...	...	...	...	...	...	...	...	1	1	1	...	...	...	...	...	...	...	...	...	...
GEAR, PREVENTOR.																					
Bars, iron, preventor	1	1	...	...	...	...	...	...	1	1	1	...	...	...	...	...	...	...	...	...	...
Pins, iron, compressor bar, with split keys	2	2	...	...	...	...	...	...	1	1	1	...	...	...	...	...	...	...	...	...	...
Plates, iron, parting	1	1	...	...	...	...	...	...	1	1	1	...	...	...	...	...	...	...	...	...	...

Where articles are interchangeable with others on the same line,

Digitized by Google

Component and Spare parts for the same—*continued.*

| R.M.L. 10·4-in. barbette. | 11 or 12-in., 25 tons. | 10-in. | 9-in. | 7-ft. parapet, C., R.M.L. | Slides, L. | | |

Spare Iron Traversing Slides, L and

Component and spare parts.	Slides, L. Casemates, R.M.L. Small port. 12·5-in., 38 tons. 7 ft. recoil.	Small port. 12·5-in., 38 tons. 6 ft. recoil, Marks II. and III.	Small port. 10-in.	To work within length. 11 or 12-in., 25 tons.	To work within length. 10-in. Mark I.	To work within length. 10-in. Mark II.	To work within length. 10-in. Special.	To work within length. 9-in.	12·5-in., 38 tons. 7 ft. recoil.	12·5-in., 38 tons. 6 ft. recoil. Marks II. and III.	12·5-in., 38 tons. 6 ft. recoil. Mark III. special.	11 or 12-in., 25 tons. Side.	11 or 12-in., 25 tons. Rear.	10-in. Side.	10-in. Rear.	10-in. Mark II.	9-in. Side.	9-in. Rear.	7-in.	Single Plate. 11 or 12-in., 25 tons, to work within length.	Single Plate. 9-in.	Single Plate. 7-in.
Rings, felt, buffer, $4\frac{7}{8}$-in. × $\frac{3}{8}$-in., $1\frac{3}{16}$-in. hole	2	2	...	...	...	...	...	...	2	2	2	...	...	...	...	...	...	...	...	...	...	...
Spindles, iron, buffer, with nuts and split keys	1	1	...	...	...	...	...	...	1	1	1	...	...	...	...	...	...	...	...	...	...	...
Trippers, iron	1	1	...	...	...	...	...	...	1	1	1	...	...	...	...	...	...	...	...	...	...	...
GEAR, RUNNING IN AND OUT.																						
Bands, steel, brake	...	...	...	...	...	...	...	...	...	...	...	...	...	...	...	...	...	...	...	...	...	...
Blocks, metal, side tackle ...	...	...	...	...	...	...	...	...	...	...	...	...	...	...	...	...	...	...	...	...	...	...
Chains, endless, iron	...	...	...	...	...	...	...	...	...	...	...	...	...	...	...	...	...	...	...	...	...	...
Clutch, metal	...	...	...	...	...	...	...	...	...	...	...	...	...	...	...	...	...	...	...	...	...	...
Handles, winch	...	...	...	...	...	...	...	...	...	...	...	...	...	...	...	...	...	...	...	...	...	...
Keys, driving, iron	...	...	...	...	...	...	...	...	...	...	...	...	...	...	...	...	...	...	...	...	...	...
Levers, iron — adjusting brake bands	...	...	...	...	...	...	...	...	...	...	...	...	...	...	...	...	...	...	...	...	...	...
Levers, iron — brake	...	...	...	...	...	...	...	...	...	...	...	...	...	...	...	...	...	...	...	...	...	...
Levers, iron — clutch	...	...	...	...	...	...	...	...	...	...	...	...	...	...	...	...	...	...	...	...	...	...
Links, chain, iron, for repairs	...	...	...	...	...	...	...	...	...	...	...	...	...	...	...	...	...	...	...	...	...	...
Pinions, clutch	...	...	...	...	...	...	...	...	...	...	...	...	...	...	...	...	...	...	...	...	...	...
Pinions, metal shaft, 1st motion ..	...	...	...	...	...	...	...	...	...	...	...	...	...	...	...	...	...	...	...	...	...	...
Pinions, with spindle, winch handle, iron	...	...	...	...	...	...	...	...	...	...	...	...	...	...	...	...	...	...	...	...	...	...
Pins — steel, connecting brake band, with collar and split key	...	...	...	...	...	...	...	...	...	...	...	...	...	...	...	...	...	...	...	...	...	...
Pins — iron, with chain lever clutch	...	...	...	...	...	...	...	...	...	...	...	...	...	...	...	...	...	...	...	...	...	...
Pins — chain, iron, for repairs ...	...	...	...	...	...	...	...	...	...	...	...	...	...	...	...	...	...	...	...	...	...	...
Pins — screw connecting chain, iron...	...	...	...	...	...	...	...	...	...	...	...	...	...	...	...	...	...	...	...	...	...	...
Screws — lubricating holes, metal	...	...	...	...	...	...	...	...	...	...	...	...	...	...	...	...	...	...	...	...	...	...
Screws — tightening chain, iron, with collar and set screw ...	...	...	...	...	...	...	...	...	...	...	...	...	...	...	...	...	...	...	...	...	...	...
Shafts, cross, iron, with coupling and pins	...	...	...	...	...	...	...	...	...	...	...	...	...	...	...	...	...	...	...	...	...	...

Where articles are interchangeable with others on the same line,

Digitized by Google

Component and Spare parts for the same—*continued*.

R.M.L. 10·4 in. barbette.	11 or 12-in., 25 tons.	10-in.	9-in.	7-ft. parapet, C, R.M.L.	Slides, L. Dwarf, R.M.L. 12·5 in., 38 tons. Marks II. and III. C	Slides, L. Dwarf, R.M.L. 12·5 in., 38 tons. Marks II. and III. D	Slides, L. Dwarf, R.M.L. 12-in., 35 tons. C	Slides, L. Dwarf, R.M.L. 11 or 12-in., 25 tons. A	Slides, L. Dwarf, R.M.L. 11 or 12-in., 25 tons. C	Slides, L. Dwarf, R.M.L. 10-in. Rear. A	Slides, L. Dwarf, R.M.L. 10-in. Central. C	Slides, L. Dwarf, R.M.L. 10-in. Side. D	Slides, L. Dwarf, R.M.L. 9-in. Rear. A	Slides, L. Dwarf, R.M.L. 9-in. Central. C	Slides, L. Dwarf, R.M.L. 9-in. Side. D	Slides, L. Dwarf, R.M.L. 7-in. A	Slides, L. Dwarf, R.M.L. 7-in. C	Slides, L. Dwarf, R.M.L. 7-in. D	Slides, L. Dwarf, R.M.L. 9-in.	Slides, L. Dwarf, R.M.L. 7-in.	Slides, L. Dwarf, R.M.L. Single Plate.	8-in. elevation.	7-in., 6¼ tons, 6 ft. parapet.	Proportion of spare for each District. per 20 guns, or any lesser No. not less than 10 of each nature.	Detached group of Sub-Districts. per 10 guns, or less No. of each nature.	Sub-District. per 10 guns, or less No. of each nature.	Fort or Battery. per 10 guns, or less No. of each nature.
...	...	...	...	...	2	2	...	...	...	...	...	...	...	...	...	...	...	...	...	...	...	...	...	...	...	...
...	...	...	...	...	1	1	...	...	...	...	...	...	...	...	...	...	...	...	...	...	...	...	...	...	...	...
...	...	...	...	...	1	1	...	...	...	...	...	...	...	...	...	...	...	...	...	...	...	...	...	...	...	...
4	...	...	...	...	...	...	...	...	...	...	...	...	...	...	...	...	...	...	...	...	...	...	1	1	...	...
...	...	...	...	...	...	...	...	...	...	...	...	...	...	...	...	...	...	...	...	...	...	...	1	...	...	...
...	...	...	...	...	...	...	...	...	...	...	...	...	...	...	...	...	...	...	...	...	...	...	2	1	...	1
...	...	...	...	...	...	...	...	...	...	...	...	...	...	...	...	...	...	...	...	...	...	...	2	2	...	...
...	...	...	...	...	...	...	...	...	...	...	...	...	...	...	...	...	...	...	...	...	...	...	...	1	...	...
...	...	...	...	...	...	...	...	...	...	...	...	...	...	...	...	...	...	...	...	...	...	...	...	1	...	...
...	...	...	...	...	...	...	...	...	...	...	...	...	...	...	...	...	...	...	...	...	...	...	...	1	...	...
2	...	...	...	...	...	...	...	...	...	...	...	...	...	...	...	...	...	...	...	...	...	...	2	...	...	...
...	...	...	...	...	...	...	...	...	...	...	...	...	...	...	...	...	...	...	...	...	...	...	...	1	...	...
...	...	...	...	...	...	...	...	...	...	...	...	...	...	...	...	...	...	...	...	...	...	...	...	1	...	...
...	...	...	...	...	...	...	...	...	...	...	...	...	...	...	...	...	...	...	...	...	...	...	5	...	...	...
...	...	...	...	...	...	...	...	...	...	...	...	...	...	...	...	...	...	...	...	...	...	...	1	...	...	...
...	...	...	...	...	...	...	...	...	...	...	...	...	...	...	...	...	...	...	...	...	...	...	1	...	...	...
...	...	...	...	...	...	...	...	...	...	...	...	...	...	...	...	...	...	...	...	...	...	...	1	...	...	...

5 per cent., or 1 Slide L complete.

or which a supply of spare is laid down, they are shown in *italics*.

Digitized by Google

Spare Iron Traversing Slides, L and

Component and spare parts.	Slides, L. Casemate, R M.L. Small port. 12·5-in., 38 tons. 7 ft. recoil.	6 ft. recoil, Marks II. and III.	10-in.	To work within length. 11 or 12-in., 25 tons.	10-in Mark I.	Mark II.	Special.	9-in.	12·5-in., 38 tons. 7 ft. recoil.	6 ft. recoil. Marks II. and III.	Mark III. special.	11 or 12-in., 25 tons. Side.	Rear.	10-in. Side.	Rear.	Mark II.	9-in. Side.	Rear.	7-in	Single Plate. 11 or 12-in., 25 tons, to work within length.	9-in.	7-in.
Shafts, iron { 1st motion	...	...	...	...	...	...	...	...	...	...	...	...	...	...	...	...	...	...	...	...	...	...
2nd ,,	...	...	...	...	...	...	...	...	...	...	...	...	...	...	...	...	...	...	...	...	...	...
3rd ,,	...	...	...	...	...	...	...	...	...	...	...	...	...	...	...	...	...	...	...	...	...	...
brake	...	...	...	...	...	...	...	...	...	...	...	...	...	...	...	...	...	...	...	...	...	...
Socket, iron, adjusting, brake bands	...	...	...	...	...	...	...	...	...	...	...	...	...	...	...	...	...	...	...	...	...	...
Spindles, wheel sprocket, rear, iron	...	...	...	...	...	...	...	...	...	...	...	...	...	...	...	...	...	...	...	...	...	...
Wheels { sprocket, iron { front	...	...	...	...	...	...	...	...	...	...	...	...	...	...	...	...	...	...	...	...	...	...
sprocket, iron { rear	...	...	...	...	...	...	...	...	...	...	...	...	...	...	...	...	...	...	...	...	...	...
spur, iron, shaft, cross	...	...	...	...	...	...	...	...	...	...	...	...	...	...	...	...	...	...	...	...	...	...
spur, metal, 2nd motion	...	...	...	...	...	...	...	...	...	...	...	...	...	...	...	...	...	...	...	...	...	...
GEAR, TRAVERSING AND RUNNING-BACK.																						
Axles, iron, with split keys { roller guide, chain endless	...	...	...	...	...	...	...	...	...	...	...	...	...	...	...	...	...	...	...	...	...	...
wheel, chain, endless	2	2	...	...	...	...	...	...	2	2	2	...	...	...	...	...	...	...	...	...	...	...
Bands, clutch { metal	1	1	...	...	...	...	...	...	1	1	1	...	...	...	...	...	...	...	...	...	...	...
iron	1	1	...	...	...	...	...	...	1	1	1	...	...	...	...	...	...	...	...	...	...	...
Bearings, metal, nut, screw, adjusting	2	2	...	...	...	...	...	...	2	2	2	...	...	...	...	...	...	...	...	...	...	...
Blocks, running-back, iron, with metal sheaves { double	...	...	...	...	...	1	1	...	...	...	...	...	...	...	...	1	...	...	...	...	...	...
double	...	...	...	...	...	1	1	...	...	...	...	...	...	...	...	1	...	...	...	...	...	...
treble	...	...	2	...	2	...	...	2	...	...	...	...	...	2	2	...	2	2	...	...	...	...
Bollards, cast-iron	...	...	1	1	1	1	1	1	...	...	...	1	1	1	1	1	1	1	...	1	...	...
Bushes, metal, fork, chain	2	2	...	...	...	...	...	...	2	2	2	...	...	...	...	...	...	...	...	...	...	...
Chains, iron, endless	2	2	...	...	...	...	...	...	2	2	2	...	...	...	...	...	...	...	...	...	...	...
Clutches { cast iron	...	...	...	...	...	...	...	...	...	...	...	...	...	...	...	...	...	...	...	...	...	...
metal	...	...	...	...	...	...	...	...	...	...	...	...	...	...	...	...	...	...	...	...	...	...
Collars iron, shaft, 2nd motion	...	...	...	...	...	...	...	1	...	...	...	...	...	...	...	...	...	...	...	...	...	...
iron, with screws, shaft { bollard	...	...	1	1	1	1	1	1	...	...	...	1	1	1	1	1	1	1	...	1	...	...
clutch, pinion	2	2	...	...	...	...	...	2	2	2	2	...	...	...	...	...	...	...	...	...	...	...
cross	...	...	...	...	...	1	...	...	...	...	...	...	...	...	...	1	...	...	...	...	...	...
longitudinal	...	...	...	...	...	...	...	...	...	...	...	...	...	...	...	...	...	...	...	...	...	...
sprocket wheel	...	...	...	...	...	...	...	2	2	2	2	...	...	...	...	...	...	...	...	...	...	...
traversing	1	1	...	...	...	...	...	1	1	1	1	...	...	...	...	...	...	...	...	...	...	...
winch handle	...	...	2	2	2	2	2	...	...	...	...	2	1	2	...	2	2	1	...	2	...	...
2nd motion	...	...	...	1	...	...	...	2	2	2	2	...	...	...	...	...	...	...	...	...	...	...
3rd ,,	...	...	...	...	1	...	...	...	...	...	...	...	...	...	...	...	...	...	...	...	...	...
steel, shaft, clutch, pinion	7	7	...	...	...	...	...	2	2	2	2	...	...	...	...	...	...	...	...	...	...	...

Where articles are interchangeable with others on the same line,

Digitized by Google

Component and Spare parts for the same—*continued.*

| Slides, L. | | |

Spare Iron Traversing Slides, L and

Component and spare parts.	Slides, L. Casemate, R.M.L. Small port. 12·5-in., 38 tons. 7 ft. recoil.	6 ft. recoil, Marks II. and III.	10-in.	To work within length. 11 or 12-in., 25 tons.	10-in. Mark I.	Mark II.	Special.	9-in.	12·5-in., 38 tons. 7-ft. recoil.	6 ft. recoil. Marks II. and III.	Mark III. special.	11 or 12-in., 25 tons. Side.	Rear.	10-in. Side.	Rear.	Mark II.	9-in. Side.	Rear.	7-in.	Single Plate. 11 or 12-in., 25 tons, to work within length.	9-in.	7 in.
Covers, iron, complete ...	1	1	1	1	1	2	1	2	...	...	...	1	..	1	...	1	...	...	...	1	...	...
Discs, metal, pointer	1	1	...	...	...	...	...	...	1	1	1	...	...	...	...	...	...	...	...	...	...	...
Forks, chain, iron, with nuts	2	2	...	...	...	...	...	...	2	2	2	...	...	...	...	...	...	...	...	...	...	...
Guards, metal, wheel, left	1	1	...	...	...	...	...	...	1	1	1	...	...	...	...	...	...	...	...	...	...	...
spur and pinion... right	1	1	...	...	...	...	...	...	1	1	1	...	...	...	...	...	...	...	...	...	...	...
Handles, winch No. 4	2	2	...	...	...	...	...	...	2	2	2	...	...	...	...	...	...	...	...	...	...	...
,, 5	...	...	2	2	2	...	2	2	...	...	...	2	...	2	...	2	...	...	...	2	...	...
,, 6	...	...	...	...	...	2	...	...	...	...	...	...	...	...	...	...	...	...	...	...	...	...
,, 7	...	...	...	...	...	...	...	...	...	...	...	...	1	...	1	...	...	1	...	...	...	...
,, 8	...	...	...	...	...	...	...	...	...	...	...	...	...	...	...	...	2	...	...	...	...	...
,, 9	...	...	...	...	...	...	...	...	...	...	...	...	...	...	...	...	...	...	...	...	...	...
,, 31	...	...	...	...	...	...	...	...	...	...	...	...	...	...	...	...	...	...	...	...	...	...
Keys, iron, driving bollard	...	...	2	...	...	...	...	...	...	...	...	2	2	...	...	...	...	...	...	2	...	...
shaft ...	...	...	2	...	2	2	2	2	...	...	...	...	...	2	2	2	2	2	...	...	...	...
Levers, iron, clutch	1	1	1	1	1	1	1	1	1	1	1	1	1	1	1	1	1	1	...	1	...	...
Links, chain, iron (for repair)	...	...	...	...	...	...	...	...	...	...	...	...	...	...	...	...	...	...	...	...	...	...
Nuts, metal, screw, adjusting, lever clutch	1	1	...	...	...	...	...	...	1	1	1	...	...	...	...	...	...	...	...	...	...	...
Pinions, M. cast-iron or steel, bevel, double, 38 and 32 teeth...	...	...	...	...	...	...	...	...	...	...	...	...	...	...	...	...	...	...	...	...	...	...
double, 30 teeth	...	...	...	...	...	...	...	...	...	...	...	...	...	...	...	...	...	...	...	...	...	...
double, 18 ,, ...	...	...	...	...	...	...	...	...	...	...	...	...	...	...	...	...	...	...	...	...	...	...
double, 15 ,, ...	...	...	...	...	...	...	...	...	...	...	...	...	...	...	...	...	...	...	...	...	...	...
2nd motion, 19 teeth ...	...	...	...	...	1	...	...	...	...	...	...	...	...	...	...	...	...	...	...	...	...	...
2nd motion, 18 ,, ...	...	...	...	1	...	...	...	...	...	...	...	...	...	...	...	...	...	...	...	1	...	...
shaft, cross, 17 ,, left	...	...	...	...	1	...	...	...	...	...	...	...	...	...	...	1	...	...	...	...	...	...
shaft, cross, 17 ,, right	...	...	...	...	1	...	...	...	...	...	...	...	...	...	...	1	...	...	...	...	...	...
shaft, cross, 16 ,, ...	...	...	2	...	...	...	...	...	...	...	...	2	2	...	...	...	...	...	...	2	...	...
shaft, cross, 15 ,, ...	...	...	...	...	...	...	2	...	...	...	...	...	...	...	...	...	...	...	...	...	...	...
shaft, cross, 15 ,, ...	...	2	...	2	...	...	...	...	...	...	...	...	...	2	2	...	...	...	...	...	...	...
shaft, cross, 14 ,, ...	...	...	...	...	...	...	2	...	...	...	...	...	...	...	...	...	2	2	...	...	...	...
shaft, longitudinal, front, 18 teeth	...	...	...	...	...	...	...	...	...	...	...	...	...	...	...	...	...	...	...	...	...	...
shaft, longitudinal, front, 16 ,, ...	...	...	...	...	...	...	...	...	...	...	...	...	...	...	...	...	...	...	...	...	...	...
shaft, longitudinal, front, 15 ,,	...	...	...	...	...	...	...	...	...	...	...	...	...	...	...	...	...	...	...	...	...	...
shaft, longitudinal, rear, 18 ,, ...	...	...	...	...	...	...	...	...	...	...	...	...	...	...	...	...	...	...	...	...	...	...
shaft, longitudinal, rear, 15 ,, ...	...	...	...	...	...	...	...	...	...	...	...	...	...	...	...	...	...	...	...	...	...	...
shaft, longitudinal, rear, 13 ,, ...	...	...	...	...	...	...	...	...	...	...	...	...	...	...	...	...	...	...	...	...	...	...

Where articles are interchangeable with others on the same line,

Digitized by Google

Component and Spare parts for the same—*continued.*

| R.M.L. 10·4-in. barbette. | | |

Spare Iron Traversing Slides, L and

Component and spare parts.	Slides, L. Casemate, R.M.L. Small port. 12·5-in., 38 tons. 7 ft. recoil.	6 ft. recoil, Marks II. and III.	10-in.	To work within length. 11 or 12-in., 25 tons	10-in. Mark I.	Mark II.	Special.	9-in.	12·5-in., 38 tons. 7 ft. recoil.	6 ft. recoil. Marks II. and III.	Mark III. special.	11 or 12-in., 25 tons. Side.	Rear.	10-in. Side.	Rear.	Mark II.	9-in. Side.	Rear.	7-in.	Single Plate. 11 or 12-in., 25 tons, to work within length.	9-in.	7-in.
Pinions, M.C.I. or steel, spur, bevel, shaft, winch handle, 19 teeth	...	...	...	...	...	...	...	...	...	...	...	1	...	...	...	...	...	...	...	...	...	...
bevel, shaft, winch handle, 15 ,,	...	...	1	...	...	...	...	...	...	...	...	...	...	1	...	...	...	1	...	...	...	...
bevel, shaft, winch handle, 12 ,,	...	...	...	...	...	1	...	...	...	...	...	...	...	...	...	1	...	...	...	...	...	...
spur, 2nd motion, 21 ,,	...	...	...	...	...	...	...	1	...	...	...	...	...	...	...	...	...	...	...	...	...	...
spur, 2nd motion, 13 ,,	...	...	...	...	...	1	...	...	...	...	...	...	...	...	...	...	...	...	...	...	...	...
spur, 2nd motion, 12 ,,	...	...	...	...	...	...	...	...	2	2	2	...	...	...	...	...	...	...	...	...	...	...
spur, 3rd motion, 20 ,,	...	...	...	...	...	...	1	...	...	...	...	...	...	...	...	...	...	...	...	...	...	...
spur, 3rd motion, 18 ,,	...	...	...	...	2	...	...	...	...	...	...	...	...	...	...	...	...	...	...	...	...	...
spur, 3rd motion, 13 ,,	...	...	...	1	...	...	...	2	...	...	...	...	...	...	...	...	...	...	...	1	...	...
shaft, longitudinal, 13 teeth	...	...	...	...	...	...	...	...	...	...	...	...	...	...	...	...	...	...	...	...	...	...
shaft, longitudinal, 12 ,,	...	...	...	...	...	...	...	...	...	...	...	...	...	...	...	...	...	...	...	...	...	...
shaft, winch handle, 15 ,,	...	...	...	...	...	...	...	...	...	...	...	...	...	...	...	...	...	...	...	2	...	...
shaft, winch handle, 14 ,,	...	...	...	...	...	...	...	...	...	...	...	...	...	...	...	...	...	...	...	...	...	...
shaft, winch handle, 13 ,,	...	...	...	...	...	...	...	...	2	2	2	...	1	...	...	...	...	...	...	...	...	...
shaft, winch handle, 12 ,,	...	...	...	2	...	...	...	...	...	...	...	...	...	...	...	1	...	...	...	...	...	...
	...	...	...	...	2	...	...	...	...	...	...	...	...	...	...	...	...	...	...	...	...	...
	...	...	...	...	...	...	1	...	...	...	...	...	...	...	...	...	...	...	...	...	...	...
	...	...	...	...	...	...	...

Component and Spare parts for the same—*continued.*

| Slides, L. | | |

Spare Iron Traversing Slides, L and

Component and spare parts.	Slides, L. Casemate, R.M.L. Small port. 12 5-in., 38 tons. 7 ft. recoil.	Small port. 12 5-in., 38 tons. 6 ft. recoil, Marks II. and III.	Small port. 12 5-in., 38 tons. 10-in.	To work within length. 11 or 12-in., 25 tons.	To work within length. 10-in. Mark I.	To work within length. 10-in. Mark II.	To work within length. 10-in. Special.	To work within length. 9-in.	12·5-in., 38 tons. 7 ft. recoil.	12·5-in., 38 tons. 6 ft. recoil. Marks II. and III.	12·5-in., 38 tons. 6 ft. recoil. Mark III. special.	11 or 12-in., 25 tons. Side.	11 or 12-in., 25 tons. Rear.	10-in. Side.	10-in. Rear.	10-in. Mark II.	9-in. Side.	9-in. Rear.	7-in.	Single Plate. 11 or 12-in., 25 tons, to work within length.	Single Plate. 9-in.	Single Plate. 7-in.
Pinions metal bevel 2nd motion, 15 teeth	...	...	...	...	...	...	...	...	...	...	...	...	...	...	...	...	...	...	...	...	...	...
Pinions metal bevel shaft winch-handle, 15 teeth	...	...	...	...	...	...	...	...	...	...	...	...	...	...	...	...	...	...	...	...	...	...
Pinions metal bevel shaft transverse 23 teeth	...	...	...	...	...	...	...	...	...	...	...	...	...	...	...	...	...	...	...	...	...	...
Pinions metal bevel shaft transverse 14 ,,	...	...	...	...	...	...	...	...	1	1	1	...	...	...	...	...	...	...	...	...	...	...
Pinions metal bevel shaft transverse 13 ,,	1	1	...	...	...	...	...	...	...	...	...	...	...	...	...	...	...	...	...	...	...	...
Pinions metal bevel and spur 19 & 10 ,,	...	...	...	...	...	...	...	...	...	...	...	...	...	...	...	...	1	...	...	...	...	...
Pinions metal bevel and spur 15 & 14 ,,	...	...	...	...	...	...	...	...	...	...	...	...	...	...	...	...	...	...	...	...	...	...
Pinions metal spur clutch 12 teeth	...	...	...	...	...	...	...	...	...	...	...	...	...	...	...	...	...	...	...	...	...	...
Pinions metal spur clutch 14 ,,	...	...	...	...	...	...	...	...	...	...	...	...	...	...	...	...	...	...	...	...	...	...
Pinions metal spur clutch friction, 12 teeth	1	1	...	...	...	...	...	...	1	1	1	...	...	...	...	...	...	...	...	...	...	...
Pinions metal spur shaft, winch-handle 10 teeth	...	...	...	...	...	...	...	2	...	...	...	...	...	...	...	...	...	1	...	...	...	...
Pinions metal spur spindle, 2nd motion, 10 teeth	2	2	...	...	...	...	...	...	...	...	...	...	...	...	...	...	...	...	...	...	...	...
Pinions metal spur shaft, 2nd motion	...	...	...	...	...	...	...	...	...	...	...	...	...	...	...	...	...	...	...	...	...	...
Pinions iron, spur, with spindles 2nd motion 11 teeth	...	...	...	...	...	...	...	...	...	...	...	...	...	...	...	...	...	...	...	...	...	...
Pinions iron, spur, with spindles 2nd motion 10 ,,	...	...	...	...	...	...	...	...	...	...	...	...	...	...	...	...	...	...	...	...	...	...
Pinions iron, spur, with spindles 10 teeth	...	...	...	...	1	...	...	...	...	...	...	...	...	...	...	...	...	...	...	...	...	...
Pinions iron, spur, with spindles winch-handle, 10 teeth	2	2	...	...	...	...	...	...	...	...	...	...	...	...	...	...	...	...	...	...	...	...
Pinions chain (for repairs)	...	...	...	...	...	...	...	...	...	...	...	...	...	...	...	...	...	...	...	...	...	...
Pins, iron connecting	...	...	...	...	...	...	...	...	...	...	...	...	...	...	...	...	...	...	...	...	...	...
Pins, iron clutch lever, joint, with collar and split key	...	...	1	1	1	1	1	1	...	...	...	1	1	1	1	1	1	1	...	1	...	...
Pins, iron clutch lever, joint, with split key	...	...	...	...	...	...	...	...	1	1	1	...	...	...	...	...	...	...	...	...	...	...
Pins, iron clutch lever, securing, with chain	...	...	1	1	1	1	1	1	...	...	...	1	1	1	1	1	1	1	...	1	...	...
Pins, iron screw, connecting, chain (for repairs)	...	...	...	...	...	...	...	...	...	...	...	...	...	...	...	...	...	...	...	...	...	...
Plates, friction, clutch* metal	14	14	...	...	...	...	...	...	14	14	14	...	...	...	...	...	...	...	...	...	...	...
Plates, friction, clutch* steel	14	14	...	...	...	...	...	...	14	14	14	...	...	...	...	...	...	...	...	...	...	...
Pointers, steel indicator	1	1	...	...	...	...	...	...	1	1	1	...	...	...	...	...	...	...	...	...	...	...
Rings, fork, copper	6	6	...	...	...	...	...	...	6	6	6	...	...	...	...	...	...	...	...	...	...	...
Rings, chain, indiarubber	8	8	...	...	...	...	...	...	8	8	8	...	...	...	...	...	...	...	...	...	...	...
Rods, iron, connecting, clutch lever	...	...	...	...	...	...	...	...	...	...	...	...	...	...	...	...	...	...	...	...	...	...

Where articles are interchangeable with others on the same line,

* 12 plates only for Mark II. casemate.

Digitized by Google

Component and Spare parts for the same—*continued*.

R.M.L. 10·4-in. barbette.	11 or 12-in., 25 tons.	10-in.	9-in.	7-ft. parapet, C, R.M.L.	Slides, L. Dwarf, R.M.L. 12·5-in., 38 tons. C	12·5-in., 38 tons. Marks II. and III. D	12-in., 35 tons. C	11 or 12-in., 25 tons. 10-in. A	11 or 12-in., 25 tons. 10-in. C	9-in. A	9-in. C	9-in. D	7-in. A	7-in. C	7-in. D	Single Plate. 9-in.	Single Plate. 7-in.	Single Plate. 8-in. elevation.	7-in., 6½ tons, 6ft. parapet.	Proportion of spare for each District. per 20 guns, or any lesser No. not less than 10 of each nature.	Detached group of Sub-Districts. per 10 guns, or less No. of each nature.	Sub-District. per 10 guns, or less No. of each nature.	Fort or Battery. per 10 guns, or less No. of each nature.
								Rear.														
								Central.														
								Side.														
								Side.														
								Rear.														
								Central.														
								Side.														
								Side.														
								Rear.														
								Central.														
								Side.														
								Side.														
								A														
								C														
								D														
								9-in.														
								7-in.														
								8-in. elevation.														
								7-in., 6½ tons, 6ft. parapet.														
1																				5 per cent., or 1 Slide L complete.			
									1														
												1											
							1																
						1																	
	1										1												
					1	1																	
1																							
1																							
										1													
							2																
	1	1	1				2	1	1	1	1	1	1	1	1						...	1 20 for 38 and 35 tons.	
					1	1																	
	1	1	1				1	1	1	1	1	1	1	1	1								
					13	15																	
					13	15																	
					1	1																	
					6	6	6																
					8	8	8																
							1																

for which a supply of spare is laid down, they are shown in *italics*.

Digitized by Google

Spare Iron Traversing Slides, L and

Component and spare parts.	Sides, L																												
	Casemate, R.M.L.																												
	Small port.		To work within length.					12·5-in., 38 tons.			11 or 12-in., 25 tons.	10-in.			9-in.		7-in.	Single Plate.		
	12·5-in., 38 tons.		10-in.	11 or 12-in., 25 tons.	10-in.			9-in.	7 ft. recoil.	6 ft recoil.																			
	7 ft. recoil.	6 ft. recoil, Marks II. and III.	10-in.		Mark I.	Mark II.	Special.			Marks II. and III	Mark III. special.	Side.	Rear.	Side.	Bear.	Mark II.	Side.	Rear.	7-in.	11 or 12-in., 25 tons, to work within length.	9-in.	7-in.
Rollers, iron, guide chain, endless	...	...	...	...	...	...	...	...	...	...	...	...	...	...	...	...	...	...	...	...	...	...
Screws, iron, adjusting, clutch lever, with collars and nut ...	1	1	...	...	...	...	...	...	1	1	1	...	...	...	...	...	...	...	...	...	...	...
Shafts, iron: 2nd motion	...	...	...	1	1	1	...	1	2	2	2	...	...	...	...	...	...	...	...	1	...	...
Shafts, iron: 3rd ,, ...	...	...	...	1	1	...	1	1	...	...	...	...	...	...	...	...	...	...	...	1	...	...
Shafts, iron: bollard	...	...	1	1	1	1	1	1	...	...	...	1	1	1	1	1	1	1	...	1	...	...
Shafts, iron: clutch pinion... ...	1	1	...	...	...	...	...	...	1	1	1	...	...	...	...	...	...	...	...	...	...	...
Shafts, iron: cross	...	...	2	2	2	*2	2	2	...	...	...	2	2	2	*2	2	2	...	...	2	...	...
Shafts, iron: longitudinal	...	...	...	...	...	...	...	1	...	...	...	...	...	...	...	...	...	...	...	...	...	...
Shafts, iron: traversing	1	1	...	...	...	...	...	...	1	1	1	...	...	...	...	...	...	...	...	...	...	...
Shafts, iron: wheel, sprocket ...	1	1	...	...	...	...	...	...	1	1	1	...	...	...	...	...	...	...	...	...	...	...
Shafts, iron: winch handle	...	...	1	2	2	1	1	2	2	2	2	1	1	1	1	1	1	1	...	2	...	..
Spindles, iron: 2nd motion	...	...	...	...	...	...	...	...	...	...	...	...	...	...	...	...	...	...	...	...	...	...
Spindles, iron: 2nd motion, with collar — 2nd and keep screw...	...	...	...	...	...	...	...	...	...	...	...	...	...	...	1	...	...	...	...	...	...	...
Spindles, iron: 2nd motion, with collar — nut and key	2	2	...	...	...	...	...	...	...	...	...	...	...	...	...	...	...	...	...	...	...	...
Spindles, iron: 2nd motion, with collar — screw and nut ...	...	...	...	...	...	...	...	...	...	...	...	...	...	...	...	...	...	...	...	...	...	...
Spindles, iron: gudgeon, with cotter, and split key	...	...	...	...	...	...	...	...	...	...	...	...	...	...	...	...	...	...	...	...	...	...
Spindles, iron: gudgeon, with collar, complete — 2nd motion pinion bevel, double ...	...	...	1	...	1	...	1	1	...	...	...	1	...	1	...	1	1	...	...	...	...	...
Spindles, iron: gudgeon, with collar, complete — wheel spur ...	...	...	...	...	...	...	...	...	...	...	...	1	1	...	...	...	...	...	...	...	...	...
Studs, steel, friction ... — bracket thrust shaft, clutch pinion ...	...	...	...	...	...	...	...	...	2	2	2	...	...	...	...	...	...	...	...	...	...	...
Wheels, M. cast-iron or steel, bevel: 2nd motion — 48 teeth	...	...	...	...	...	...	...	...	2	2	2	...	...	...	...	...	...	...	...	...	...	...
Wheels, M. cast-iron or steel, bevel: 2nd motion — 35 ,, ...	...	...	...	...	...	...	...	...	...	...	...	...	...	...	...	...	...	...	...	...	...	...
Wheels, M. cast-iron or steel, bevel: 2nd motion — 32 ,, ...	...	...	...	...	...	...	...	...	...	...	...	...	...	...	...	...	...	...	...	...	...	...
Wheels, M. cast-iron or steel, bevel: 2nd motion — 27 ,, ...	...	...	...	...	...	1	...	...	...	...	...	...	...	...	...	...	...	...	...	...	...	...
Wheels, M. cast-iron or steel, bevel: 2nd motion — 19 ,, ...	...	...	...	...	...	...	1	...	...	...	...	...	...	...	...	...	...	...	...	...	...	...
Wheels, M. cast-iron or steel, bevel: and spur 2nd motion — 35 and 12 teeth...	...	...	...	...	...	...	...	...	...	...	...	...	...	...	...	...	...	...	...	...	...	...
Wheels, M. cast-iron or steel, bevel: and spur 2nd motion — 27 and 13 ,, ...	...	...	...	...	...	...	...	...	...	...	...	...	...	...	...	1	...	...	...	...	...	...
Wheels, M. cast-iron or steel, bevel: and spur 2nd motion — 27 and 12 ,, ...	...	...	...	...	...	...	...	...	...	...	...	...	...	...	...	...	...	...	...	...	...	...
Wheels, M. cast-iron or steel, bevel: and spur 2nd motion — 27 and 10 ,, ...	...	...	...	1	...	...	...	...	...	...	...	...	...	1	...	...	...	...	...	...	...	...
Wheels, M. cast-iron or steel, bevel: and spur 2nd motion — 19 and 13 ,, ...	...	...	...	...	...	...	...	...	...	...	...	1	...	...	...	...	...	...	...	...	...	...

Where articles are interchangeable with others on the same line,
* 1 long and 1 short.

Digitized by Google

Component and Spare parts for the same—*continued.*

R.M.L. 10·4-in. barbette.	11 or 12-in., 25 tons.	10-in.	9-in.	7-ft. parapet, C, R.M.L.	Slides, L. Dwarf, R.M.L. 12·5-in., 38 tons.	Marks 11. and 111.	12-in., 35 tons.	11 or 12-in., 25 tons. A	11 or 12-in., 25 tons. C	10-in. A	10-in. C	10-in. D	9-in. A	9-in. C	9-in. D	7-in. A	7-in. C	7-in. D	9-in.	7-in.	Single Plate.	8-in. elevation.	7-in., 6½ tons, 6 ft. parapet.	Proportion of spare for each District. per 20 guns, or any lesser No. not less than 10 of each nature.	Detached group of Sub-Districts. per 10 guns, or less No. of each nature.	Sub-District. per 10 guns, or less No. of each nature.	Fort or Battery. per 10 guns, or less No. of each nature.
						C	C	Rear.																		
						D		Central.																		
							C	Side.																		
								Side.																		
								Rear.																		
								Central.																		
								Side.																		
								Side.																		
								Rear.																		
								Central.																		
								Side.																		
								Side.																		
																	A	C	D							

Spare Iron Traversing Slides, L and

Component and spare parts.	Slides, L. Casemate, R.M.L. Small port. 12·5-in., 38 tons. 7 ft. recoil.	6 ft. recoil, Marks II. and III.	10-in.	To work within length. 11 or 12-in., 25 tons.	10-in. Mark I.	Mark II.	Special.	9-in.	12·5-in., 38 tons. 7 ft. recoil.	6 ft. recoil. Marks II. and III.	Mark III. special.	11 or 12-in., 25 tons. Side.	Rear.	10-in. Side.	Rear.	Mark II.	9-in. Side.	Rear.	Single Plate. 7-in.	11 or 12-in., 25 tons, to work within length.	9-in.	7-in.
Wheels, M. cast-iron or steel — bevel — shaft — 3rd motion — 30 teeth	...	...	...	1	...	...	...	...	...	...	...	...	...	...	...	...	...	...	...	1	...	...
27 ,,	...	...	...	...	...	...	1	...	...	...	...	...	...	...	...	...	...	...	...	...	...	...
cross — 38 teeth	...	...	...	...	...	...	...	...	...	...	...	...	...	...	...	...	...	...	...	...	...	...
32 ,,	...	...	...	...	...	...	...	...	...	...	...	...	...	...	...	...	...	...	...	...	...	...
30 ,, left	...	...	...	...	...	...	...	...	...	...	...	...	...	...	...	...	...	...	...	...	...	...
30 ,, right	...	...	...	...	...	...	...	...	...	...	...	...	...	...	...	...	...	...	...	...	...	...
27 ,, left	...	...	...	...	...	1	...	...	...	...	...	...	...	...	...	1	...	...	...	...	...	...
27 ,, right	...	...	...	...	...	1	...	...	...	...	...	...	...	...	...	1	...	...	...	...	...	...
24 ,,	...	...	...	...	...	...	2	...	...	...	...	...	...	...	...	...	...	...	...	...	...	...
22 ,,	...	...	...	2	2	...	...	2	...	...	...	2	2	2	2	...	2	2	...	2	...	...
18 ,,	...	...	...	...	...	...	...	...	...	...	...	...	...	...	...	...	...	...	...	...	...	...
17 ,,	...	...	...	...	2	...	...	...	...	...	...	...	...	...	...	...	...	...	...	...	...	...
longitudinal — 35 teeth	...	...	...	...	...	...	1	...	...	...	...	...	...	...	...	...	...	...	...	...	...	...
19 ,,	...	...	...	...	...	...	...	...	...	...	...	...	...	...	...	...	...	...	...	...	...	...
traversing — 28 ,,	...	...	...	...	...	...	...	...	...	...	...	...	...	...	...	...	...	...	...	...	...	...
27 ,,	...	...	...	...	...	...	...	...	...	...	...	...	...	...	...	...	...	...	...	...	...	...
23 ,,	...	...	...	...	...	...	...	...	...	...	...	...	...	...	...	...	...	...	...	...	...	...
18 ,,	1	1	...	...	...	...	...	...	1	1	1	...	...	...	...	...	...	...	...	...	...	...
spindle, pinion — 27 ,,	...	...	...	...	...	...	...	...	...	...	...	...	...	...	...	...	...	...	...	...	...	...
19 ,,	...	...	...	...	1	...	...	...	...	...	...	...	...	...	...	...	...	...	...	...	...	...
spur — 2nd motion — 70 teeth ...	2	2	...	...	...	...	...	...	2	2	2	...	...	...	...	...	...	...	...	...	...	...
62 ,, ...	...	...	...	...	...	...	...	...	...	...	...	...	...	...	...	...	...	...	...	...	...	...
60 ,, ...	...	...	...	...	...	...	...	...	...	...	...	...	...	...	...	...	...	...	...	...	...	...
46 and 14 teeth ...	...	...	...	...	...	...	...	...	...	...	...	...	...	...	...	...	...	...	...	...	...	...
46 and 13 ,, ...	...	...	...	...	...	...	...	...	...	...	...	1	1	...	...	...	...	...	...	...	...	...
46 and 12 ,,	...	...	...	...	...	...	...	...	...	...	...	...	...	...	...	1	...	...	...	...	...	...
2nd motion 44 teeth	...	...	...	...	...	...	...	...	...	...	...	...	...	...	...	...	...	...	...	...	...	...
38 teeth ...	...	...	...	...	...	...	...	...	...	...	...	...	...	...	...	...	...	...	...	...	...	...
36 ,, ...	...	...	...	...	...	...	...	...	...	...	...	...	...	...	...	...	...	...	...	...	...	...
28 ,, ...	...	...	...	2	1	...	...	...	...	...	...	...	...	...	...	...	...	...	...	2	...	...
23 ,, ...	...	...	...	...	1	...	...	...	...	...	...	...	...	...	...	...	...	...	...	...	...	...
20 and 15 teeth ...	...	...	...	...	...	1	...	1	...	...	...	...	...	...	...	...	...	...	...	...	...	...
3rd motion, 79 and 12 teeth ...	...	...	...	...	...	...	...	...	...	...	...	...	...	...	...	...	...	...	...	...	...	...
clutch — 23 teeth	...	...	...	...	...	...	...	...	...	...	...	...	...	...	...	...	...	...	...	...	...	...
19 ,,	...	...	...	...	...	...	...	...	...	...	...	...	...	...	...	...	...	...	...	...	...	...
shaft, bollard, 65 teeth	...	...	...	...	...	...	1	...	...	...	...	...	...	...	...	...	1	...	...	...	...	...
	...	...	...	1	1	...	...	...	...	...	...	...	...	...	...	1	...	...	...	...	...	...

Where articles are interchangeable with others on the same line,

Digitized by Google

Component and Spare parts for the same—*continued.*

R.M.L. 10·4-in. barbette.	11 or 12-in., 25 tons.	10-in.	9-in.	7-ft. parapet, C, R.M.L.	Slides, L. Dwarf, R.M.L. 12·5-in., 38 tons. Marks II. and III. C	12·5-in., 38 tons. Marks II. and III. D	12-in., 35 tons. C	11 or 12-in., 25 tons. A	11 or 12-in., 25 tons. C	10-in. A	10-in. C	10-in. D	9-in. A	9-in. C	9-in. D	7-in. A	7-in. C	7-in. D	Single Plate. 9-in.	Single Plate. 7-in.	8-in. elevation.	7-in., 6½ tons, 6 ft. parapet.	Proportion of spare for each District. per 20 guns, or any lesser No. not less than 10 of each nature.	Detached group of Sub-Districts. per 10 guns, or less No. of each nature.	Sub-District. per 10 guns, or less No. of each nature.	Fort or Battery. per 10 guns, or less No. of each nature.
...	...	...	...	...	...	...	...	...	...	...	...	...	...	...	...	...	...	...	...	...	...	...	...	...	...

Spare Iron Traversing Slides, L and

Component and spare parts.	Slides, L. Casemate, R.M.L. Small port. 12·5-in., 38 tons. 7 ft. recoil.	6 ft. recoil, Marks II. and III.	10-in.	To work within length. 11 or 12 in., 25 tons. 10-in. Mark I.	Mark II.	Special.	9-in.	12·5-in., 38 tons. 7 ft. recoil. 6 fr. recoil. Marks II. and III.	Mark III. special.	11 or 12-in., 25 tons. Side.	Rear.	10-in. Side.	Rear.	Mark II.	9-in. Side.	Rear.	7-in.	Single Plate. 11 or 12-in., 25 tons, to work within length.	9-in.	7 in.
Wheels, M. cast-iron or steel spur, shaft, bollard, 62 teeth	...	...	...	1	...	...	...	...	...	1	1	...	...	...	...	...	...	1	...	...
bollard, 46 ,,	...	..	...	...	...	...	1	...	...	...	...	...	...	...	...	...	...	...	...	...
bollard, 19 ,,	...	...	...	...	...	...	...	1	...	...	...	...	...	...	1	1	...	...	...	...
clutch pinion, 36 ,,	2	2	...	...	...	...	...	2	2	2	...	...	...	...	...	...	...	...	...	...
3rd motion 29 teeth	...	...	...	...	...	...	...	...	...	...	...	...	...	...	...	...	...	...	...	...
longitudinal, 32 ,,	...	...	...	...	...	...	...	...	...	...	...	...	...	...	...	...	...	...	...	...
longitudinal, 27 ,,	...	...	...	...	...	...	...	...	...	...	...	...	...	...	...	...	...	...	...	...
longitudinal, 23 ,,	...	...	...	...	...	...	...	...	...	...	...	...	...	...	...	...	...	...	...	...
longitudinal, 21 ,,	...	...	...	...	...	...	1	...	...	...	...	...	...	...	...	...	...	...	...	...
wheel, 30 teeth	...	...	...	...	...	...	...	1	1	1	...	...	...	...	...	...	...	...	...	...
sprocket 25 ,,	1	1	...	...	...	...	...	...	...	...	...	...	...	...	...	...	...	...	...	...
spindle, 2nd motion 62 ,,	...	...	...	...	...	...	...	...	...	...	...	...	...	...	...	...	...	...	...	...
spindle, 2nd motion 46 ,,	...	...	...	...	...	...	...	...	...	...	...	...	...	...	...	...	...	...	...	...
spindle, gudgeon 23 ,,	...	...	...	1	...	...	...	...	...	...	...	...	...	...	...	...	...	...	...	...
spindle, gudgeon 21 ,,	...	...	...	...	...	...	1	...	...	...	...	...	...	...	...	...	...	...	...	...
on chain, endless ...	2	2	...	...	...	...	...	2	2	2	...	...	...	...	...	...	...	...	...	...
on sprocket	2	2	...	...	...	...	...	2	2	2	...	...	...	...	...	...	...	...	...	...
metal, hand, screw adjusting, clutch lever	1	1	...	...	...	...	...	1	1	1	...	...	...	...	...	...	...	...	...	...
Gear Training.																				
Keys, driving, iron	...	...	...	...	...	...	...	...	...	...	...	...	...	...	...	...	...	...	...	...
Pinions steel, with spindle	...	...	...	...	...	...	...	...	...	...	...	...	...	...	...	...	...	...	...	...
Pinions winch handle ...	...	...	...	...	...	...	...	...	...	...	...	...	...	...	...	...	...	...	...	...
Pinions training metal ...	...	...	...	...	...	...	...	...	...	...	...	...	...	...	...	...	...	...	...	...
Screws, lubricating holes, metal	...	...	...	...	...	...	...	...	...	...	...	...	...	...	...	...	...	...	...	...
Shafts, iron	...	...	...	...	...	...	...	...	...	...	...	...	...	...	...	...	...	...	...	...
Wheels, bevel metal, 56 teeth	...	...	...	...	...	...	...	...	...	...	...	...	...	...	...	...	...	...	...	...

Where articles are interchangeable with others on the same line,

Digitized by Google

Component and Spare parts for the same—*continued*.

| Slides, L. | | |

SPARE BEDS AND CARRIAGES FOR MEDIUM ORDNANCE,

Component and spare parts.	Beds.				Garrison,						
					Wood.						
					R.B.L.		R.M.L.			S.B.	
	Mortar, naval, with octagonal deck, 13-in., 100 cwt.	Howitzer R.M.L. Steel. Iron, 8-in.	6·6-in.	6·3-in.	No. 18, converted naval, 7-in. 72 cwt.	Nos. 15 to 17, 7-in. Nos. 19 to 20, 40-pr.	Nos. 21, 22, 80-pr., S.B. 68-pr.	No. 23, 71 cwt., and S.B. 8-in. 65 cwt. No. 24, 58 cwt., and S.B. 32-pr. 58 cwt, No. 25, 58 cwt.	68-pr.,112cwt.,8-in.,54cwt. 32-pr., 63 cwt., 50 cwt., 24 and 13-pr.	Howitzer, 10 and 8-in.	
Vocabulary Section V. (1).											
Arcs, compressor gear { adjusting	...	1	1	1	...	...	...	...	...	...	
compressor...	...	1	1	1	...	...	...	...	...	...	
Arms radial, iron, with retaining { left ...	...	...	...	...	...	...	...	...	...	...	
chain ... ... { right ...	...	...	...	...	...	...	...	...	...	...	
Axles { iron, roller, with split keys... ...	...	...	...	...	...	...	...	...	...	...	
	...	...	...	*	2½	2	2	2	2	2	
	...	...	...	*	2½	...	...	...	...	...	
steel, roller { with split key	...	...	...	...	...	...	...	...	...	...	
	...	6	6	6	...	...	...	...	...	...	
with nuts { front and rear ...	...	...	...	...	...	...	...	...	...	...	
and pins { intermediate ...	...	...	...	...	...	...	...	...	...	...	
front ...	...	...	...	...	...	...	...	...	...	...	
rear and intermediate	...	...	...	...	...	...	...	...	...	...	
transporting bed, howitzer, R.M.L....	...	1	1	1	...	...	...	...	...	...	
Bands, iron, securing, hydraulic buffer ... ... { front ...	...	...	...	...	...	...	...	...	...	...	
rear ...	...	...	...	...	...	...	...	...	...	...	
Bars, iron { connecting piston rod	...	...	...	...	...	...	...	...	...	...	
supporting compressor plates...	...	...	...	...	...	...	...	...	...	...	
Bearings { box, screw elevating, with bolts...	...	12	1	...	...	...	...	...	...	...	
with screws, axles roller	...	12	12	12	...	...	...	...	...	...	
axletree, transporting	...	2	2	2	...	...	...	...	...	...	
metal { compressor { adjusting shaft ...	...	...	...	...	...	...	...	...	...	...	
compressor { compressor screw ...	...	1	1	1	...	...	...	...	...	...	
gear { adjusting screw ...	...	1	1	1	...	...	...	...	...	...	
pinion spindle elevating	...	1	1	3	...	...	...	...	...	...	
spindle, mitre wheel	...	...	...	...	...	...	...	...	...	...	
iron, with screws, axles roller	...	...	...	...	...	...	...	...	...	...	
Beds { body	...	1	1	1	...	...	...	...	...	...	
iron	...	...	...	...	...	1	1	1	1	1	
wood	...	...	...	...	1	...	...	...	...	...	

* The issue of spare beds or carriages will be confined to stations abroad, and not † Front. ‡ Rear.
Where articles are interchangeable with others on the same line for

Digitized by Google

AND COMPONENT AND SPARE PARTS FOR THE SAME.

| Carriages. | | |

Spare Beds and Carriages for Medium Ordnance, and

Component and spare parts.	Beds.				Garrison,						
					Wood.						
					R.B.L.		R.M.L.			S.B.	
	Mortar, naval, with octagonal deck, 13-in., 100 cwt.	Howitzer R.M.L. Iron, 8-in.	Howitzer R.M.L. Steel. 6·6-in.	Howitzer R.M.L. Steel. 6·3-in.	No. 18, converted naval, 7-in., 72 cwt.	Nos. 15 to 17, 7-in. Nos. 19 to 20, 40-pr.	Nos. 21, 22, 80-pr., S.B. 68-pr.	No. 23, 71 cwt., and S.B. 8-in., 65 cwt. No. 24, 58 cwt., and S.B. 32-pr., 58 cwt. No. 25, 58 cwt.	68-pr., 112 cwt., 8-in., 54 cwt. 32-pr., 63 cwt., 50 cwt.. 24 and 18-pr.	Howitzer, 10 and 8-in.	
Blocks, wood — buffer front, with bolts	...	...	...	...	...	...	...	...	...	...	
Blocks, wood — swing	...	...	...	...	1	...	...	...	...	...	
Blocks, wood — trunnion, transporting bed, howitzer, R.M.L.	...	1	1	1	...	...	...	...	...	...	
Bolsters, wood, with wedge	1	.	...	...	...	...	...	...	...	...	
Bolts, iron, connecting bed, with nuts and split keys	...	...	...	...	...	...	...	...	...	...	
Boxes, iron, screw elevating	...	...	...	...	...	...	...	...	...	...	
Brackets, transporting bed, howitzer, R.M.L. — left	...	1	1	1	...	...	...	...	...	...	
Brackets, transporting bed, howitzer, R.M.L. — right	...	1	1	1	...	...	...	...	...	...	
Brackets, with bolts or screws — iron — comp. adjusting shaft	...	...	...	...	...	...	...	...	...	...	
Brackets, with bolts or screws — iron — gear compressor screw	...	...	...	...	...	...	..	..	...	...	
Brackets, with bolts or screws — iron — hydraulic buffer	...	...	...	...	...	...	...	...	...	...	
Brackets, with bolts or screws — iron — stop, lever jamming	...	...	...	...	...	...	...	...	...	...	
Brackets, with bolts or screws — iron — link, adjusting chain	...	...	...	...	...	...	...	...	...	...	
Brackets, with bolts or screws — iron — retaining left	...	...	...	...	...	...	...	...	...	...	
Brackets, with bolts or screws — iron — retaining right	...	...	...	...	...	...	...	...	...	...	
Brackets, with bolts or screws — iron — bearing shaft, eccentric, double	...	..	...	...	...	...	..	...	...	...	
Brackets, with bolts or screws — iron — clamp	...	...	...	...	...	...	...	...	...	...	
Brackets, with bolts or screws — metal — shaft, elevating centre	...	...	...	...	...	...	...	...	...	...	
Brackets, with bolts or screws — metal — shaft, elevating front	...	...	...	...	...	...	...	...	...	...	
Brackets, with bolts or screws — metal — shaft, elevating rear	...	...	...	...	...	...	...	...	...	...	
Brackets, with bolts or screws — metal — spindle, worm, elevating bottom	...	1	1	1	...	...	...	...	...	...	
Brackets, with bolts or screws — metal — spindle, worm, elevating top	...	1	1	1	...	...	...	...	...	...	
Brackets, with bolts or screws — compressor lever, consisting of 1 elastic pad and plate, with bracket	...	...	...	...	...	...	...	...	...	...	
Buffers — hydraulic	...	...	...	...	...	...	...	...	...	...	
Buffers — hydraulic	...	...	...	...	...	...	...	...	...	...	
Buffers — hydraulic	...	...	...	...	...	...	...	...	...	...	
Buffers — hydraulic	...	...	...	...	...	...	...	...	...	...	
Buffers — hydraulic	...	...	...	...	...	...	...	...	...	...	
Capsquares, iron	2	2	2	2	2	...	...	...	...	...	
Carriages, body	...	..	...	...	1	1	1	1	1	1	
Chains, iron — drag, shoe	...	...	...	...	...	...	...	...	...	...	
Chains, iron — supporting hydraulic buffer	...	...	...	...	...	...	...	...	...	...	
Chains, iron — keep, with shakle, collar, pin and split key	...	...	...	...	...	...	...	...	...	...	

Where articles are interchangeable with others on the same line for
See Note * page 974.

Digitized by Google

Component and Spare Parts for the same—*continued.*

| Carriages. | | |

Spare Beds and Carriages for Medium Ordnance, and

Component and spare parts.	Beds.				Garrison,						
					Wood.						
					R.B.L.		R.M.L.			S.B.	
	Mortar, naval, with octagonal deck, 13-in., 100 cwt.	Howitzer R.M.L. Iron, 8-in.	Howitzer R.M.L. Steel. 6·3-in.	Howitzer R.M.L. Steel. 6·3-in.	No. 18, converted naval, 7-in., 72 cwt.	Nos. 15 to 17, 7-in. Nos. 19 to 20, 40-pr.	Nos. 21, 22, 80-pr., S.B. 63-pr.	No. 23, 71 cwt., and S.B. 8-in., 65 cwt. No. 24, 58 cwt., and S.B. 32-pr., 58 cwt. No. 25, 58 cwt.	63-pr., 112 cwt., 8-in., 54 cwt. 32-pr., 63 cwt., 50 cwt., 24 and 18-pr.	Howitzer, 10 and 8-in.	
Clips, transom, transporting bed, howitzer, R.M.L.	...	1	1	1	...	...	...	...	...	...	
Cocks, hydraulic buffer	...	...	...	...	...	...	...	...	...	...	
Coins, wood — carriage, No. 5	...	...	...	...	...	1	1	1	1	1	
Coins, wood — elevating	1	...	...	...	...	...	...	...	...	...	
Coins, wood — hand, No. 4	...	...	...	...	1	1	1	1	1	1	
Coins, wood — hand, No. 7	...	...	...	...	...	...	...	...	...	...	
Coins, wood — housing	1	...	...	...	...	...	...	...	...	...	
Compressors, iron side plates, with screws, bolts and nuts, 1 left and 1 right ... set	...	..	...	...	1	...	...	...	...	...	
Cotters, steel, with split key, securing trunnion plates	...	...	..	...	...	...	...	...	...	...	
Cranks, iron, rear roller, with split key ... ... — left ...	...	..	...	...	1	...	...	...	...	...	
Cranks, iron, rear roller, with split key ... ... — right	...	...	...	...	1	...	...	...	...	...	
Cylinders — wood, supporting radial arm ...	...	..	...	...	...	...	...	...	...	...	
Cylinders — with ram hydro-pneumatic ...	...	...	...	...	...	...	...	...	...	...	
Decks, wood, octagonal	1	...	...	...	...	...	...	...	...	...	
Derricks, iron, loading	1	...	...	...	...	...	...	...	...	...	
Eye pins, iron, securing guard, worm wheel	...	1	1	1	...	...	...	...	...	...	
Flanges, roller — metal, rear ... — left ...	...	...	...	...	...	...	...	...	...	...	
Flanges, roller — metal, rear ... — right	...	...	...	...	...	...	...	...	...	...	
Flanges, roller — steel ... ... — front	...	...	...	...	...	...	...	...	...	...	
Flanges, roller — steel ... ... — rear ...	...	...	...	...	...	...	...	...	...	...	
Flanges, roller — iron, front ... — left ...	...	...	...	...	...	...	...	...	...	...	
Flanges, roller — iron, front ... — right	...	...	...	...	...	...	...	...	...	...	
Guides — metal — arc elevating	...	...	...	...	...	...	...	...	...	...	
Guides — metal — rack elevating — left ...	...	..	...	...	...	...	...	...	...	...	
Guides — metal — rack elevating — right	...	...	...	...	...	...	...	...	...	...	
Guides — iron, bar directing ... — left ...	...	1	1	1	...	...	...	...	...	...	
Guides — iron, bar directing ... — right	...	1	1	1	...	...	...	...	...	...	
Guards — iron — chain, retaining	...	...	...	...	...	...	...	...	...	...	
Guards — iron — windlass, hauling down	...	...	...	...	...	...	...	...	...	...	
Guards — leather	2	...	...	...	...	...	...	...	...	...	
Handles, iron — air pump	...	...	...	...	...	...	...	...	...	...	
Handles, iron — screw elevating ratchet head ...	...	...	...	...	1	1	1	1	1	...	
Handles, iron — starting	...	.	...	...	...	...	...	...	...	...	

Where articles are interchangeable with others on the same line *for* *See* Note * page 974.

Digitized by Google

Component and Spare Parts for the same—*continued.*

| Carriages. | | |

Spare Beds and Carriages for Medium Ordnance, and

Component and spare parts.	Beds.				Garrison,								
					Wood.								
					R.	.L.	R.M.L.			S.B.			
			Steel.										
	Mortar, naval, with octagonal deck, 13-in., 100 cwt.	Iron, 8-in.	6·6-in.	6·3-in.	No. 18, converted naval, 7-in., 72 cwt.	Nos. 15 to 17, 7-in. Nos. 19 to 20, 40-pr.	Nos. 21, 22, 80-pr., 68-pr.	S.B.	No. 23, 71 cwt., and S.B. 8-in., 65 cwt. No. 24, 58 cwt., and S.B. 32-pr., 58 cwt. No. 25, 58 cwt.	68-pr., 112 cwt., 8-in., 54 cwt., 32-pr., 63 cwt., 50 cwt., 24 and 18-pr.	Howitzer, 10 and 8-in.		
Hooks, drag chain	...	...	...	...	...	...	...	...	...	...	...		
iron drag shoe	...	...	...	...	...	...	...	...	...	...	...		
Indicators, pressure spring, with leather case	...	...	...	...	...	...	...	...	...	...	...		
Joints, iron, rocking levers	...	...	...	...	...	...	...	...	...	...	...		
Keys, capsquare, with chains — iron ... — No. 10 ...	4	...	...	...	...	...	...	...	...	...	...		
,, 88 ...	...	...	...	...	...	...	...	...	...	...	...		
,, 90 left ...	...	...	...	...	...	...	...	...	...	...	...		
,, 91 right	...	...	...	...	...	...	...	...	...	...	...		
,, 92 ...	...	...	...	...	...	...	...	...	...	...	...		
,, 93 ...	...	...	...	...	...	...	...	...	...	...	...		
,, 99 ...	...	...	...	...	...	...	...	...	...	...	...		
Keys, capsquare, with chains — steel ... — No. 1 ...	...	4	...	...	...	...	...	...	...	...	...		
,, 2 ...	...	...	4	4	...	...	...	...	...	...	...		
,, 215 left ...	...	...	...	...	...	...	...	...	...	...	...		
,, 216 right	...	...	...	...	...	...	...	...	...	...	...		
,, 224 ...	...	...	...	...	...	...	...	...	...	...	...		
,, 225 left ...	...	...	...	...	...	...	...	...	...	...	...		
,, 226 right	...	...	...	...	...	...	...	...	...	...	...		
Keys, capsquare ... — No. 97 left ...	...	...	...	...	...	...	...	...	...	...	...		
,, 98 right	...	...	...	...	...	...	...	...	...	...	...		
,, 180 ..	...	...	...	...	4	...	...	...	...	...	...		
,, 94 left ...	...	...	...	...	...	...	...	...	...	...	...		
,, 95 right	...	...	...	...	...	...	...	...	...	...	...		
Keys, coin, with chains	2	...	...	...	...	...	...	...	...	...	...		
securing guard, worm wheel ...	...	1	1	1	...	...	...	...	...	...	...		
split axles roller, so fitted	...	...	...	...	...	...	...	...	...	...	...		
pin, directing bar, transporting bed, howitzer, R.M.L.	...	1	1	1	...	...	...	...	...	...	...		
Lashings, tarred ... 2 inch 18 feet	...	...	...	...	...	...	...	...	...	...	...		
1½ ,, 64 ,, ...	...	1	1	1	...	...	...	...	...	...	...		
1½ ,, 50 ,, ...	...	2	3	3	...	...	...	...	...	...	...		
1¼ ,, 22 ,, ...	...	1	...	...	...	...	...	...	...	...	...		
Levers air pump	...	...	...	...	...	...	...	...	...	...	...		
traversing	1	...	...	...	...	...	...	...	...	...	...		
windlass, hauling down	...	...	...	...	...	...	...	...	...	...	...		
Limbers, transporting bed, howitzer, R.M.L.	...	1	1	1	...	...	...	...	...	...	...		

Where articles are interchangeable with others on the same line for
See Note * page 974.

Digitized by Google

Component and Spare Parts for the same—*continued*.

| Carriages. | | |

Spare Beds and Carriages for Medium Ordnance, and

Component and spare parts.	Beds.				Garrison.					
		Howitzer R.M.L.			Wood.					
			Steel.		R.B.L.	R.M.L.			S.B.	
	Mortar, naval, with octagonal deck, 13-in., 100 cwt.	Iron, 8-in.	6·6-in.	6·3-in.	No. 18, converted naval, 7-in., 72 cwt.	Nos. 15 to 17, 7-in. Nos. 19 to 20, 40-pr.	Nos. 21, 22, 80-pr., S.B. 68-pr.	No. 23, 71 cwt., and S.B. 8-in., 65 cwt. No. 24, 58 cwt., and S.B. 32-pr., 58 cwt. No. 25, 58 cwt.	68-pr., 112 cwt., 8-in., 54 cwt. 32-pr., 63 cwt., 50 cwt., 24 and 18-pr.	Howitzer, 10 and 8-in.
Links, adjusting, chain, retaining, with 3 india rubber and 2 iron rings, shackle, nut, pin, key and chain	...	...	...	...	...	...	...	...	...	...
Loops, iron — common, with nuts ... side	...	4	4	4	...	...	...	...	...	...
Loops, iron — common, with nuts ... transom	...	1	1	1	...	...	...	...	...	...
Loops, iron — with plate securing piston hydraulic buffer	...	...	...	...	...	...	...	...	...	...
Nuts, metal, elevating screw	...	...	...	...	1	1	1	1	1	1
Nuts, metal, ,, with pinion ...	...	...	...	...	...	...	...	...	...	...
Packings, cylinder, leather (12 per set) set	...	...	...	...	...	...	...	...	...	...
Pads, elastic pieces, buffer	...	...	...	...	...	...	...	...	...	...
Pawls, windlass, iron, hauling down ...	...	...	...	...	...	...	...	...	...	...
Pins, iron — bar connecting piston rod ...	...	...	...	...	...	...	...	...	...	...
Pins, iron — bed, with chain ...	...	...	...	...	...	*1*	*1*	*1*	*1*	...
Pins, iron — bed, with split key... ...	...	...	...	...	...	...	...	...	...	1
Pins, iron — preventor rope...	...	...	...	...	...	*1*	*1*	*1*	*1*	*1*
Pins, iron — sheave, with nut and split key	...	...	...	...	...	...	...	...	...	...
Pins — directing bar, transporting bed, howitzer, R.M.L.	...	1	1	1	...	...	...	...	...	...
Pins — linch, 1st class	...	...	...	...	...	...	...	...	...	...
Pins — windlass, with split key	...	...	...	...	...	...	...	...	...	...
Pintails, iron, with metal nut and washers	1	...	...	...	...	...	...	...	...	...
Pipes, copper, air pump	...	...	...	...	...	...	...	...	...	...
Plates, iron — clip with bolts front or rear	...	...	...	...	...	...	...	...	...	...
Plates, iron — clip with bolts pairs front	...	...	...	...	...	...	...	...	...	...
Plates, iron — clip with bolts pairs rear	...	...	...	...	...	...	...	...	...	...
Plates, iron — ground	...	...	...	...	...	...	...	...	...	...
Plates, iron — rear roller drop ...	...	...	...	...	...	...	...	...	...	...
Plates, iron — rear roller plain	...	...	...	...	...	...	...	...	...	...
Plates, iron — rear roller with stop left	...	...	...	...	...	...	...	...	...	...
Plates, iron — rear roller with stop right	...	...	...	...	...	...	...	...	...	...
Plates, metal, trunnion	...	...	...	...	...	...	...	...	...	...
Plates, steel ,, ...	...	...	...	...	...	...	...	...	...	...
Plugs, wood	1	.	...	...	...	...	...	...	...	...
Pumps, air	...	...	...	...	...	...	...	...	...	...
Racks, steel, with bolts, running in and out	...	...	...	...	...	...	...	...	...	...

Where articles are interchangeable with others on the same line *for*
See Note * page 974.

Digitized by Google

Component and Spare Parts for the same—*continued*.

| Carriages. | | |

Spare Beds and Carriages for Medium Ordnance, and

Component and spare parts.	Beds.				Garrison,							
					Wood.							
		Howitzer, R.M.L.			R.B.L.		R.M.L.			S.B.		
			Steel.									
	Mortar, naval, with octagonal deck, 13-in., 100 cwt.	Iron, 8-in.	6·6-in.	6·3-in.	No. 18, converted naval, 7-in. 72 cwt.	Nos. 15 to 17, 7-in. Nos. 19 to 20, 40-pr.	Nos. 21, 22, 80-pr., S.B. 68-pr.	No. 23, 71 cwt., and S.B. 8-in. 65 cwt. No. 24, 58 cwt., and S.B. 32-pr. 58 cwt. No. 25, 58 cwt.	68-pr., 112 cwt., 8-in., 54cwt. 32-pr., 63 cwt., 50 cwt., 24 and 18-pr.	Howitzer, 10 and 8-in.
Rings, india-rubber — buffer piston rod	...	...	...	...	...	...	...	...	...	...
link retaining chain, $2\frac{3}{4}$ in. by $\frac{5}{8}$ in., $\frac{3}{8}$ in. hole	...	...	...	...	...	...	...	...	...	...
11 in. by 3 in. by 6 in. hole	1	...	...	...	...	...	...	...	...	...
7 " " 3 " " 2 " "	20	...	...	...	...	...	...	...	...	...
7 " " $1\frac{1}{2}$ " " 3 " "	2	...	...	...	...	...	...	...	...	...
Rollers, carriage — metal No. 31	...	6	6	6	...	...	...	...	...	...
" 84	...	...	...	...	2‡	2	2	2	2	2
steel No. 2	...	...	...	...	2§	2	...	...	...	...
" 3	...	...	...	...	...	...	...	...	...	...
" 5	...	...	...	...	...	...	...	...	...	...
" 4	...	...	...	...	...	...	...	...	...	...
Rollers, wood — scotch	...	...	...	...	...	...	...	...	...	...
shifting gun	...	...	...	...	...	...	...	...	...	...
Ropes, hauling down, 5 in., 45 ft.	...	...	...	...	...	...	...	...	...	...
Screws, iron, elevating	...	...	...	...	1	1	1	1	1	1
Sheaves, metal — hauling down	...	...	...	...	...	...	...	...	...	...
preventor rope, with pin	...	...	...	...	2	...	...	...	...	...
Shoes, drag iron, 1st class	...	1	1	1	...	...	...	...	...	...
Sockets, iron — lever	...	...	...	...	2	...	...	...	...	...
priming iron with screws	...	1	1	1	...	...	...	...	...	...
Springs, steel, recoil, valve	...	...	...	...	...	...	...	...	...	...
Steps, wood — side	...	...	...	...	...	...	...	...	...	...
laying	...	...	...	...	...	...	...	...	...	...
Spindles, iron — pawl, with collar and nut — left	...	...	...	...	...	...	...	...	...	...
right	...	...	...	...	...	...	...	...	...	...
sleave, with cottar, collar, and split key — left	...	...	...	...	...	...	...	...	...	...
right	...	...	...	...	...	...	...	...	...	...
screw, elevating, with collar, nut, and split key	...	...	...	...	...	...	...	...	...	...
Stays, iron, bar connecting with nuts	...	...	...	...	...	...	...	...	...	...
Stops, iron, with screws — bar supporting compressor plates	...	...	...	...	...	...	...	...	...	...
compressor plates	...	2	2	2	...	...	...	...	...	...
Steps, iron, laying — with bolts	...	...	...	...	...	...	...	...	...	...
" key	...	...	...	...	...	...	...	...	...	...

Where articles are interchangeable with others on the same line for
See Note * page 974.

Digitized by Google

Component and Spare Parts for the same—*.continued.*

Carriages.

Sliding.

Iron.

R.B.L.

7-inch.

No. 1, 4 ft. 3 in., 3 ft. 6 in. or 2 ft. 7 in. parapet.	for wood platform		No. 4, 40-pr.	No. 5, 20-pr.
	No. 3, 3 ft. 6 in. parapet.	No. 2, 4 ft. 3 in. or 3 ft. 6 in. parapet.		
...	...	...	2	...
...	...	...	...	...
...	...	...	...	...
...	...	...	...	...
...	...	...	...	...
...	...	...	...	...
...	...	...	10	...
...	...	...	...	12
...	...	...	...	...
...	...	...	...	...
...	...	...	...	...
...	...	...	...	...
...	...	...	...	...
...	1	1	...	...
...	...	...	...	...
...	...	...	...	...
...	...	...	...	...
...	...	...	...	...
...	...	...	...	...
2	...	2	...	...
...	...	...	...	...
...	...	...	...	...
...	...	...	...	...
...	...	...	...	...
2	2	...	...	...
...	...	...	...	...
...	...	...	...	...
...	...	...	...	...

R.M.L.

64-pr.

71 cwt. for wood platform. 4 ft. 3 in. or 3 ft. 6 in. parapet.	64 cwt.		No. 13, 58 cwt. for wood platform, 4 ft. 3 in. or 3 ft. 6 in. parapet.	No. 14, 40-pr.	No. 6, S.B.L. 32-pr.
	No. 11, 3 ft. 6 in. parapet.	No. 12, 2 ft. 7 in. parapet.	No. 8, 6 ft. parapet.	No. 9, 5 ft. 6 in. parapet.	
...	...	...	...	...	...
...	...	...	...	...	...
...	...	...	...	...	...

Spare Beds and Carriages for Medium Ordnance, and

Component and spare parts.	Beds				Garrison,								
					Wood.								
	Mortar, naval, with octagonal dece, 13-in., 100 cwt.	Howitzer R.M.L.			R.B.L.		R.M.L.			S.B.			
		Iron, 8-in.	Steel.		No. 18, converted naval, 7-in., 72 cwt.	Nos. 15 to 17, 7-in.	Nos. 19 to 20, 40-pr.	Nos. 21, 22, 80-pr., 8.B. 63-pr.	No. 23, 71 swt., and S.B. 8-in., 65 cwt.	No. 24, 58 cwt., and S.B. 32-pr., 58 cwt.	No. 25, 58 cwt.	63-pr., 112 cwt., 8-in., 54 cwt. 32-pr., 63 cwt., 50 cwt. 24 and 18-pr.	Howitzer, 10 and 8-in.
			6·6-in.	6·3-in.									
Straps, leather, securing...	...	...	...	...	...	...	...	...	...		...	...	...
Stops, iron, rack, { bottom	...	...	...	...	...	...	...	...	...		...	...	...
elevating { top	...	...	...	...	...	...	...	...	...		...	...	...
Washers, iron, drag, 1st class B. ...	...	...	...	...	...	...	...	...	...		...	...	...
Wheels { iron, hand, elevating ...	...	...	...	...	...	...	...	...	...		...	...	...
1st class B. { No. 5 (6 ft)	...	...	...	...	...	...	...	...	...		...	...	...
,, 6 (5 ft.)	...	2	2	2	...	...	...	...	...		...	...	...
,, 7 (5 ft.)	...	...	...	...	...	...	...	...	...		...	...	...
Windlasses, hauling down	...	...	...	...	...	...	...	...	...		...	...	...
BARS, DIRECTING.													
Bars, iron, compressor	...	4	4	4	...	...	...	...	...		...	...	...
Bodies, bar, directing	...	1	1	1	...	...	...	...	...		...	...	...
Buffers, consisting of { 2 elastic pads, 2 plates, with bolts and nuts, front	...	1	1	1	...	...	...	...	...		...	...	...
3 elastic pads, 3 plates, with bolts and nuts, rear	...	1	1	1	...	...	...	...	...		...	...	...
Flaps, metal	...	1	1	1	...	...	...	...	...		...	...	...
Pads, elastic. front {	...	2	...	...	...	...	...	...	...		...	...	...
pieces, buffer { rear	...	...	2	2	...	...	...	...	...		...	...	...
... ...	...	3	...	...	...	...	...	...	...		...	...	...
Pins { steel, flap, with lanyard	...	...	3	3	...	...	...	...	...		...	...	...
iron, compressor bar, with collar and split keys	...	1	1	1	...	...	...	...	...		...	...	...
Rings, india rubber, 4 in. by ½ in., 2 in. hole	...	2	2	2	...	...	...	...	...		...	...	...
	...	6	6	6	...	...	...	...	...		...	...	...

Where articles are interchangeable with others on the same line for

* *See* Note page 974.

Digitized by Google

Component, and Spare Parts for the same—*continued.*

| Carriages. | | |

Spare Beds and Carriages for Medium Ordnance, and

Component and spare parts.	Beds.				Garrison,								
					Wood.								
		Howitzer R.M.L.			R.B.L.		R.M.L.			S.B.			
			Steel.										
	Mortar, naval, with octagonal deck, 13-in., 100 cwt.	Iron, 8-in.	6·6-in.	6·3-in.	No. 18, converted naval 7-in. 72 cwt.	Nos. 15 to 17, 7-in.	Nos. 19 to 20, 40-pr.	Nos. 21, 22, 80-pr., 68-pr.	No 23, 71 cwt., and 8-in. 65 cwt.	No. 24, 58 cwt., and 32-pr. 58 cwt.	No. 25, 58 cwt.	63-pr., 112 cwt., 8-in.,54 cwt., 32-pr., 63 cwt., 50 cwt., 24 and 18-pr.	Howitzer, 10 and 8-in.
GEAR, COMPRESSOR.													
Cramps, iron	...	1	1	1	...	...	...	...		...		...	...
Levers, iron, adjusting, with chain and key	...	1	1	1	...	...	...	...		...		...	...
Levers, iron, rocking, adjusting ...	...	...	...	...	...	...	...	...		...		...	...
Levers, iron, rocking, compressor	...	...	...	...	...	...	...	...		...		...	...
Levers, steel, compressor	...	1	1	1	...	...	...	...		...		...	...
Nuts, metal, adjusting, with 3 feathers ...	...	..	...	...	...	...	...	...		...		...	...
Nuts, metal, compressor	...	...	...	...	...	...	...	..		...		...	...
Pins, iron, rocking lever, with split key	...	...	...	...	..	..	...	...		...		...	...
Plates, iron, compressor...	...	6	6	6	...	...	...	...		...		...	...
Screws, iron, adjusting. with collar and key ...	...	1	1	1	...	...	...	...		...		...	...
Screws, iron, compressor, with and nut	...	1	1	1	...	...	...	...		...		...	...
Screws, iron, compressor, with collar and key and nut...	...	...	...	...	...	...	...	...		...		...	...
Shafts, iron, adjusting, with collar, key and nut	...	...	...	...	...	...	...	...		...		...	...
GEAR, ELEVATING.													
Arcs, elevating, iron, right	...	1	...	...	...	...	...	...		...		...	...
	...	...	1	...	...	...	...	...		...		...	...
	...	.	...	1	...	...	...	...		...		...	...
	...	...	...	...	...	...	...	...		...		...	...
	...	...	...	...	...	...	...	...		...		...	...
	...	...	...	...	...	...	...	...		...		...	...
	...	.	...	..	...	...	...	...		...		...	...
	...	...	...	...

Component and Spare Parts for the same—*continued.*

| Carriages. Sliding. Iron. R.B.L. 7-in. | | | | | R.M.L. 64-pr. | | | | |

Spare Beds and Carriages for Medium Ordnance, and

Component and spare parts.		Beds.				Garrison,								
						Wood.								
			Howitzer R.M.L.			R.B.L.		R.M.L.			S.B.			
				steel.										
		Mortar, naval, with octagonal deck, 13-in., 100 cwt.	Iron, 8-in.	6·6-in.	6·3-in.	No. 18, converted naval, 7-in., 72 cwt.	Nos. 15 to 17, 7-in. Nos. 19 to 20, 40-pr.	Nos. 21, 22, 80-pr., S.B. 65-pr.	No. 23, 71 cwt., and S.B. 8-in., 65 cwt.	No. 24, 58 cwt., and S.B. 32-pr., 58 cwt. No. 25, 58 cwt.	68-pr., 112 cwt., 8-in., 54 cwt. 32-pr., 63 cwt., 50 cwt., 24 and 18-pr.	Howitzer, 10 and 8-in.		
...	plates, friction { steel / metal } pair	...	...	..	...	...	...	...	...	...	...	...	...	...
Brakes	screw, iron, jamming with split key ,,	...	...	...	...	...	...	...	...	...	...	...	...	...
...	handle, iron	...	...	...	...	...	...	...	...	...	...	...	...	...
Capstan heads, iron, with feathers		...	...	...	...	...	...	...	...	...	...	...	...	...
Clamps, iron { left ... ... / right ... ... }		...	...	...	...	...	...	...	...	...	...	...	...	...
Discs, metal, ratchet, spindle worm ,,		...	...	...	...	...	...	...	...	...	...	...	...	...
Guards { metal, wheel { worm ... ... / spur ... ... }		...	1	1	1	...	...	...	...	...	...	...	...	...
... { iron, mitre wheel		...	...	...	...	...	...	...	...	...	...	...	...	...
Levers, iron { jamming { left ... ... / right ... ... }		...	...	...	...	...	...	...	...	...	...	...	...	...
{ spindle, worm, with collar and screws		...	...	...	...	...	...	...	...	...	...	...	...	...
Pinions, elevating { metal		...	...	...	...	...	...	...	...	...	...	...	...	...
... { bevel		...	...	...	...	...	...	...	...	...	...	...	...	...
... ... left		...	...	...	...	...	...	...	...	...	...	...	...	...
... ... right		...	...	...	...	...	...	...	...	...	...	...	...	...
... ... 2nd motion		...	...	...	...	...	...	...	...	...	...	...	...	...
... steel {		...	1	...	...	...	...	...	...	...	...	...	...	...
... ...		...	...	...	...	...	...	...	...	...	...	...	...	...
... ... collars and nuts		...	...	...	...	...	...	...	...	...	...	...	...	...
... ... with spindles		...	...	...	...	...	...	...	...	...	...	...	...	...
... ...		...	...	...	...	...	...	...	...	...	...	...	...	...
... ...		...	...	1	1	...	...	...	...	...	...	...	...	...
... ... collars and nuts { 1st motion / 2nd ,, }		...	...	...	...	...	...	...	...	...	...	...	...	...
... ... collars { nut and pin, 1st motion / and screw, 2nd motion }		...	...	...	...	...	...	...	...	...	...	...	...	...

Where articles are interchangeable with others on the same line for

* *See* Note page 974.

Digitized by Google

Component and Spare Parts for the same—*continued.*

| Carriages. | | |

Spare Beds and Carriages for Medium Ordnance, and

Component and spare parts.	Beds.				Garrison,								
					Wood.								
					R.B.L.		R.M.L.			S.B.			
	Mortar, naval, with octagonal deck, 13-in., 100 cwt.	Howitzer R.M.L.			No. 18, converted naval, 7-in., 72 cwt.	Nos. 15 to 17, 7-in. Nos. 19 to 20, 40-pr.	Nos. 21, 22, 80-pr., S.B. 68-pr.	No. 23, 71 cwt., and S.B. 8-in., 65 cwt. No. 24, 58 cwt., and S.B. 32-pr., 58 cwt. No. 25, 58 cwt.		68-pr., 112 cwt., 8-in., 54 cwt. 32-pr., 63 cwt., 50 cwt., 24 and 18-pr.		Howitzer, 10 and 8-in.
		Iron, 8-in.	Steel.										
			6·6-in.	6·3-in.									
Pinions, elevating — steel, with spindles, and nuts, 2nd and 3rd motion	...	...	...	2	...	...	...		...	...		...	
Pinions, elevating — collars	...	...	...	...	...	...	...		...	...		...	
Pinions, elevating — bevel, iron	...	...	...	...	...	...	...		...	...		...	
Pointers, steel, arc, elevating	...	...	...	...	...	...	...		...	...		...	
Racks, iron, elevating, with left ...	...	...	...	...	...	...	...		...	...		...	
collar and screws right	...	...	...	...	...	...	..		...	...		...	
Rollers, metal, friction, with spindle — nut and steel pin	...	...	...	...	...	...	...		...	...		...	
Rollers, metal, friction, with spindle — collar, nut, and split key	...	2	2	1	...	...	...		...	...		...	
Rods, iron, elevating	...	...	...	...	...	...	...		...	...		...	
Screws, metal, lubricating holes	...	2	2	2	...	...	...		...	...		...	
Shafts, iron — cross worm wheel, with collar and nuts	...	.	...	...	...	...	...		...	...		...	
Shafts, iron — elevating, with collars and nuts ...	...	...	...	...	...	...	...		...	...		...	
Spindles, iron — mitre wheel	...	...	...	...	...	...	...		...	...		...	
Spindles, iron — worm, with collars and nuts ...	...	1	1	1	...	...	...		...	...		...	
Studs, bearing, worm spindle	...	3	2	2	...	...	...		...	...		...	
Tubes, metal lubricating	...	1	1	1	...	...	...		...	...		...	
Wheels — metal — hand, elevating ...	...	1	1	1	...	...	...		...	...		...	
Wheels — metal — bevel	...	...	...	...	...	...	...		...	...		...	
Wheels — metal — mitre	...	...	...	...	...	...	...		...	...		...	
Wheels — metal — worm, with friction, cone, and feathers	...	1	1	1	...	...	...		...	...		...	
Wheels — iron — hand, elevating ...	...	...	...	...	...	...	...		...	...		...	
Wheels — iron — spur, 2nd motion...	...	...	...	...	...	...	...		...	...		...	
Wheels — iron — spur	...	...	...	...	...	...	...		...	...		...	
GEAR, RUNNING UP.													
Axles, iron, roller, front, with split key ...	...	...	...	...	...	...	...		...	...		...	
Rollers, metal, carriage — front No. 29 ...	...	...	...	...	...	...	...		...	...		...	
Rollers, metal, carriage — front ,, 32 ...	...	...	...	...	...	...	...		...	...		...	
Rollers, metal, carriage — rear No. 71 ...	...	...	...	...	...	...	...		...	...		...	
Rollers, metal, carriage — rear ,, 73 ...	...	...	...	...	...	...	...		...	...		...	
Rollers, metal, carriage — rear ,, 95 ...	...	...	...	...	...	...	...		...	...		...	

Where articles are interchangeable with others on the same line for

* *See* Note page 974.

Digitized by Google

Component and Spare Parts for the same—*continued.*

| Carriages. | | |

Spare Beds and Carriages for Medium Ordnance, and

Component and spare parts.	Beds.				Garrison,						
					Wood.						
					R.B.L.		R.M.L.			S.B.	
	Mortar, naval, with octagonal deck, 13-in., 100 cwt.	Howitzer, R.M.L. Iron, 8-in.	Howitzer, R.M.L. Steel. 6·6-in.	Howitzer, R.M.L. Steel. 6·3-in.	No. 18, converted naval, 7-in. 72 cwt.	Nos. 15 to 17, 7-in. Nos. 19 to 20, 40-pr.	Nos. 21, 22, 80-pr., S.B. 65-pr.	No. 23, 71 cwt., and S.B. 8-in. 65 cwt.	No. 24, 58 cwt., and S.B. 32-pr. 58 cwt.	No. 25, 58 cwt.	68-pr., 112 cwt., 8-in., 54cwt. 32-pr., 63 cwt., 50 cwt., 24 and 18-pr.	Howitzers, 10 and 8-in.
Shafts, iron { eccentric, double, with split keys	...	...	...	...	...	...	...	...		...	...	...
{ eccentric, double	..	...	...	...	...	...	...	...		...	...	...
Sockets, iron, lever, with pawl, and split key { left, No. 1	...	...	..	..	...	...	...	...		...	...	...
{ right, No. 2	...	...	...	...	...	...	...	...		...	...	...
LIMBER, IRON SIEGE.												
Boxes { tin, grease, half round 3 lbs.	...	...	...	...	...	...	...	...		...	...	...
{ ammunition { near	...	...	...	...	...	...	...	...		...	...	...
{ ammunition { off	...	...	...	...	...	...	...	...		...	...	...
{ wood { centre	...	...	...	...	...	...	...	...		...	...	...
{ wood { siege	...	...	...	...	...	...	...	...		...	...	...
Cans, tin { glycerine, 1 gallon	...	...	...	...	...	...	...	...		...	...	...
Cans, oil { lubricating { 1 pint ...	...	...	...	...	...	...	...	...		...	...	...
Cans, oil { lubricating { No. 3 ...	...	...	...	...	...	...	...	...		...	...	...
Cans, oil { 2 gallons	...	...	...	...	...	...	...	...		...	...	...
Lashings, tarred, 1 in., 10 ft.	...	...	...	..	...	...	...	...		...	...	...
Limbers, body, iron	...	...	...	...	...	...	...	...		...	...	...
Pins { steel, linch, 2nd class	...	...	...	...	...	...	...	...		...	...	...
Pins { iron, shaft, with { near, No. 1 shaft ...	...	...	...	...	...	...	...	...		...	...	...
Pins { key and chain { framed, No. 16 shaft	...	...	...	...	...	...	...	...		...	...	...
Shafts, wood { No. 1 (near)	...	...	...	...	...	...	...	...		...	...	...
Shafts, wood { ,, 20 (off) (2nd class C.) ...	...	...	...	...	...	...	...	...		...	...	...
Shafts, wood { ,, 16 (framed) pairs ...	...	...	...	...	...	...	...	...		...	...	...
Stays, iron, outrigger	...	...	...	...	...	...	...	...		...	...	...
Straps, leather, securing...	...	...	...	...	...	...	...	...		...	...	...
Swingletrees, No. 1, siege	...	...	...	...	...	...	...	...		...	...	...
Washers, iron, loop, 2nd class C. ...	...	...	...	...	...	...	...	...		...	...	...
Wheels, 2nd class B, 5 ft., No. 25 ...	...	...	...	...	...	...	...	...		...	...	...

Where articles are interchangeable with others on the same line, for
* *See* Note page 974.

Digitized by Google

Component and Spare Parts for the same—*continued.*

Carriages.																										Proportions of spare for each.			
Sliding.																			Siege.										
Iron.																			Iron with limber.						Steel with limber R.M.L.				
R.B.L.					R.M.L.															Howitzer R.M.L.										
7-inch.					64-pr.															8-in.										
No. 1, 4 ft. 3 in., 3 ft. 6 in. or 2 ft. 7 in. parapet.	No. 3, 3 ft. 6 in. parapet.	for wood platform	No. 2, 4 ft. 3 in. or 3 ft. 6 in. parapet.	No. 4, 40-pr.	No. 5, 20-pr.	No. 10, 4 ft. 3 in. or 3 ft. 6 in. parapet.	71 cwt. for wood platfm.	No. 11, 3 ft. 6 in. parapet.	No. 12, 2 ft. 7 in. parapet.	64 cwt.	No. 8, 6 ft. parapet.	No. 9, 5 ft. 6 in. parapet.	No. 13, 58 cwt. for wood platform, 4 ft. 3 in. or 3 ft. 6 in. parapet.	No. 14, 40-pr.	No. 6, S.B.B.L. 32-pr.	Gun, B.L. 40-pr., 6 ft. parapet.	70 cwt.	46 cwt.	6·6-in.	6·3-in.	6·6-in. gun.	District per 20 guns, howitzers or mortars, or any less No. not less than 10 of each nature.	Detached group of Sub-Districts, per 10 guns, howitzers or mortars, or less No. of each nature.	Sub-District, per 10 guns, howitzers or mortars, or less No. of each nature.	Fort or battery, per 10 guns, howitzers or mortars, or less No. of each nature.
1	1	1	...	...	...	1	1	1	...	1	1	...	...	...	...	...	...	...	...	...	...	...	...	...	...	...
...	...	...	...	...	...	...	...	...	...	...	...	1	...	...	...	...	...	...	...	...	...	...	...	...	...	...
1	*1*	*1*	...	...	...	*1*	*1*	*1*	...	*1*	*1*	...	...	...	...	...	...	...	...	...	...	...	...	...	...	*1*
1	*1*	*1*	...	...	...	*1*	*1*	*1*	...	*1*	*1*	...	...	...	...	...	...	...	...	...	...	...	...	...	...	*1*
...	...	...	...	...	...	...	...	...	...	...	...	...	...	...	1†	1	1	1	1	1	...	...	...	...	...
...	...	...	...	...	...	...	...	...	...	...	...	...	...	...	1	...	...	...	...	...	...	...	...	...	...
...	...	...	...	...	...	...	...	...	...	...	...	...	...	...	1	...	...	...	...	...	...	...	...	...	...
...	...	...	...	...	...	...	...	...	...	...	...	...	...	...	1	...	...	...	...	...	...	...	...	...	...
...	...	...	...	...	...	...	...	...	...	...	...	...	...	...	...	1	1	1	1	1	...	...	...	...	...
...	...	...	...	...	...	...	...	...	...	...	...	...	...	...	...	...	...	...	...	1	...	...	...	...	...
...	...	...	...	...	...	...	...	...	...	...	...	...	...	...	...	1	1	1	1	1	...	...	...	...	...
...	...	...	...	...	...	...	...	...	...	...	...	...	...	...	...	...	1	1	1	...	...	...	...	...	...
...	...	...	...	...	...	...	...	...	...	...	...	...	...	...	...	1	1	1	1	1	...	...	...	...	...
...	...	...	...	...	...	...	...	...	...	...	...	...	...	...	...	2	2	2	2	2	...	1	...	...	...
...	...	...	...	...	...	...	...	...	...	...	...	...	...	...	...	*1*	*1*	*1*	*1*	*1*	...	1	...	...	...
...	...	...	...	...	...	...	...	...	...	...	...	...	...	...	...	*1*	*1*	*1*	*1*	*1*	...	1	...	...	...
...	...	...	...	...	...	...	...	...	...	...	...	...	...	...	...	1	1	1	1	1	...	...	...	...	...
...	...	...	...	...	...	...	...	...	...	...	...	...	...	...	...	1	1	1	1	1	...	...	...	...	...
...	...	...	...	...	...	...	...	...	...	...	...	...	...	...	...	2	2	2	2	2	...	...	...	...	...
...	...	...	...	...	...	...	...	...	...	...	...	...	...	...	...	47	32	33	33	33	33	* 5 per cent., or 1 bed or 1 carriage complete.	...	...	1
																									48″ × 1″ and one 30″ × 1″
...	...	...	...	...	...	...	...	...	...	...	...	...	...	...	...	3	3	3	3	3	3		...	...	...
...	...	...	...	...	...	...	...	...	...	...	...	...	...	...	...	1	1	1	1	1	1		...	...	...
...	...	...	...	...	...	...	...	...	...	...	...	...	...	...	...	2	2	2	2	2	2		...	...	...

which a supply of spare is laid down they are shown in *italics.*

† One limber to every 3 guns or less. ‡ No 5, if for siege train. § For siege train only.

Digitized by Google

SPARE MONCRIEF WROUGHT-IRON GARRISON CARRIAGES, AND COMPONENT AND SPARE PARTS FOR THE SAME.

Component and spare parts.	R.M.L.				Proportions of spare for each			
	8 B.L., 7-in.	9-in. (Mark II.)	7-in. (Mark I.)	7-in. (Mark II.)	3½-pr., 58 cwt.	District. per 20 guns, or any lesser No. not less than 10 of each nature.	Detached group of Sub-Districts. per 10 guns, or less No. of each nature.	Sub-District. per 10 guns, or less No. of each nature.	Fort or Battery. per 10 guns, or less No. of each nature.
CARRIAGES.									
Bearings, metal ... cylindrical, trunnion	2	2	...	2	2				
with screws, elevating			...	2	...				
shaft ... connecting			...	2	...				
Brackets, metal, with bolts or screws — shaft, elevating			...	1	...				
spindle worm — centre			...	1	...				
front			...	1	...				
rear			...	1	...				
Cap squares — cast-iron ... left...			...	...	1				
right			...	...	1				
wrought-iron left...	1	1	1	1	...				
right	1	1	1	1	...				
Carriages, body, iron ... without fittings			...	1	...				
without fittings, with counter-weight	1	1	...	1	1				
Collars, iron, axle, with screws			...	2	...				
Guides, iron, arc elevating			...	2	...				
Loops, iron, lifting, counterweight		4	...	2	...				
Rollers, iron			...	2	...				
Screws, iron — cap square	4	4	4	4	4				
preserving		8	...	6	...				
Stages, laying, ...			...	1	...				
Steps, side — left...			...	1	...				
right			...	1	...				
ELEVATORS.									
Elevators, body, iron, without fittings, with counterweight			...	1	...				
Guards, iron, turning, stage-loading...			...	2	...				
Guides, iron, shot			...	1	...				
Screws, iron, securing, loop-washer			...	2	...				
Shafts iron, connecting...			...	1	...				
Washers, iron, loop, connecting shaft			...	2	...				

*5 per cent., or 1 carriage complete.

* The issue of spare carriages will be confined to stations abroad, and not more than 1 will be allowed for less than 30 guns of same nature.

Digitized by Google

Spare Moncrieff Wrought-Iron Garrison Carriages, and Component and Spare Parts for the same—*continued.*

Component and spare parts.	R.M.L. 7-in. (Mark II.)	R.M.L. 9-in. (Mark II.)	R.M.L. 7-in. (Mark I.)*	R.M.L. (Mark II.) 4·7-pr., 58 cwt.	Proportions of spare for each: District. per 20 guns, or any lesser No. not less than 10 of each nature.	Detached group of Sub-Districts. per 10 guns, or less No. of each nature.	Sub-District. per 10 guns, or less No. of each nature.	Fort or Battery. per 10 guns, or less No. of each nature.
SLIDES.								
Axles, truck — steel — bevel wheel			2			1		
steel — with nuts, plain			2			1		
iron, with collars and nuts — bevel wheel		2				1		
iron, with collars and nuts — plain		4				1		
iron, with collars and pins — bevel wheel			2			1		
iron, with collars and pins — plain			2			1		
iron, with pins — plain — front				2		1		
iron, with pins — plain — rear				1		1		
iron, with nuts — bevel wheel	2					1		
iron, with nuts — plain	2					1		
Bearings, metal with bolts or screws — flanges, for trucks, front — inside			1					
flanges, for trucks, front — outside			1					
flanges, for trucks, rear — inside			1					
flanges, for trucks, rear — outside			1					
pinion, spindle bevel, gear, traversing — front			1					
pinion, spindle bevel, gear, traversing — rear			1					
shafts — elevating			1					
shafts — main — inside			4					
shafts — main — outside			2					
shafts — retaining			2					
shafts — 2nd motion				2				
shafts — longitudinal, long, front				1				
spindle — for clutch pinion — left				1				
spindle — for clutch pinion — right				1				
spindle — pinion, hand wheel		1						
Bollards, with ratchet wheel — left	1	1	1	1	* 5 per cent., or 1 carriage complete.			
Bollards, with ratchet wheel — right	1	1	1	1				
Bolts, iron, cap, pinion spindle, rack retaining, with 2 nuts			8			4		
Brackets, complete, with bolts or screws, cast-iron. — friction roller, arc — left	1							
Brackets, complete, with bolts or screws, cast-iron. — friction roller, arc — right	1							
guide, rack retaining — centre, right	1							
guide, rack retaining — front — left	1							
guide, rack retaining — front — right	1							
guide, rack retaining — rear — left	1							
guide, rack retaining — rear — right	1							
hook, preventor — left			1					
hook, preventor — right			1					

* *See* Note page 993.

Digitized by Google

Spare Moncrieff Wrought-Iron Garrison Carriages, and Component and Spare Parts for the same—*continued.*

Component and spare parts.				R.M.L.			Proportions of spare for each			
				R.B.L., 7-in.	9-in. (Mark II.)	7-in. (Mark I.)	7-in. (Mark II.)	4½-pr. 58 cwt.	District. per 20 guns, or any lesser No. not less than 10 of each nature.	Detached group of Sub-Districts. per 10 guns, or less No. of each nature.	Sub-District. per 10 guns, or less No. of each nature.	Fort or Battery. per 10 guns, or less No. of each nature.
Brackets, with bolts or screws	cast-iron	pinion, spindle	bevel	for trucks	front		1	...	...	1	...	* 5 per cent., or 1 carriage complete.			
					rear		1	...	...	1	...				
				winch handle	front		1	...	...	...	...				
					front	inside	...	...	...	1	...				
						outside	...	...	...	1	...				
					rear		1	...	...	...	...				
					rear	inside	...	...	...	1	...				
						outside	...	...	...	1	...				
				elevating	inside	left	1	...	...	...	1				
						right	1	...	...	...	1				
					outside		1	...	...	1	1				
				rack, retaining			...	...	2	...	...				
			rear, truck				...	...	...	...	2				
		shafts	connecting, brake levers			left	...	1	1	1	...				
						right	...	1	1	1	...				
			elevating			left	...	1	...	...	...				
						right	...	1	...	...	...				
			longi-tudinal	long	inter-mediate	front	...	...	1	...	...				
						rear	...	...	1	...	..				
					rear		...	.	1	...	...				
				short		front	...	...	1	...	...				
						rear	...	...	1	...	...				
			main			left	...	1	...	...	1				
						right	...	1	...	...	1				
			retaining			left	...	...	1	...	...				
						right	...	...	1	...	...				
			vertical			top	...	...	...	1	...				
						bottom	...	...	...	1	...				
			spindle	pinion, hand wheel			...	...	1	...	...				
				windlass		left	...	...	1	...	...				
						right	...	...	1	...	...				
				worm			...	1	...	...	1	1			
				worm		front	...	...	1	...	...				
						rear	...	...	1	...	...				
			stage, loading			left	...	..	...	1	...				
						right	...	...	...	1	...				
			wheel, spur and pinion, traversing			front	...	...	1	...	...				
						rear	...	...	1	...	...				
			guide, pointer				...	...	1	...	...				
	metal		pinion, spindle	hauling down			...	...	...	1	...				
				rack, retaining		left	...	...	...	1	...				
						right	...	...	...	1	...				
				spur, winch handle		left	...	...	...	1	...				
						right	...	...	...	1	..				
			spindle, for clutch pinion			left	...	...	...	...	1				
						right	...	...	...	...	1				

* *See* Note page 996.

Digitized by Google

Spare Moncrieff Wrought-Iron Garrison Carriages, and Component and Spare Parts for the same—*continued.*

Component and spare parts.		R.B.L., 7-in.	R.M.L. 9-in. (Mark II.)	R.M.L. 7-in. (Mark I.)	R.M.L. 7-in. (Mark II.)	R.M.L. 4½-pr., 58 cwt.	Proportions of spare for each: District. per 20 guns, or any lesser No. not less than 10 of each nature.	Detached group of Sub-Districts. per 10 guns, or less No. of each nature.	Sub-District. per 10 guns, or less No. of each nature.	Fort or Battery. per 10 guns, or less No. of each nature.
Brackets, with bolts or screws, iron — friction roller, arc, with collar and pin	left	...	1	...	...	...	* 5 per cent., or 1 carriage complete.			
	right	...	1	..	...	...				
guide — elevating	left	...	1	1	...	1				
	right	...	1	1	...	1				
guide — hook, preventor	left	...	...	...	1	...				
	right	...	...	...	1	...				
lever, brake		...	...	2	...	...				
pinion, spindle, elevating, and friction roller	left	...	...	...	...	1				
	right	...	...	...	...	1				
shaft — cross, 2nd motion		...	...	...	1	...				
shaft — longitudinal, long, front		...	...	...	1	...				
sheave, loading gear, pair	bottom	...	...	1	...	1				
	centre	...	...	1	...	1				
	top	...	...	1	...	1				
spindle — bollard	left	...	1	1	...	...				
	right	...	1	1	...	...				
spindle — pawl	left	...	...	1	...	...				
	right	...	...	1	...	...				
standard	left	...	...	...	...	1				
	right	...	...	...	...	1				
Buffers, including — spindles and keys, with disc springs		...	...	1	...	...				
stop, spindle and nut, with disc springs	left	...	1	...	...	1				
	right	...	1	...	...	1				
Flanges, truck — iron — front	left	...	1	...	...	1				
	right	...	1	...	...	1				
iron — rear	left	...	1	...	...	1				
	right	...	1	...	...	1				
cast — steel — centre	left	...	...	1	...	...				
	right	...	...	1	...	...				
steel — front	left	...	...	1	...	...				
	right	...	...	1	...	...				
steel — rear	left	...	...	1	...	...				
	right	...	...	1	...	...				
iron, pairs — front	left	...	...	...	1	...				
	right	...	...	...	1	...				
iron, pairs — rear	left	...	...	...	1	...				
	right	...	...	...	1	...				
Ladders, iron, with bolts, and stays	left	...	1	...	1	1				
	right	...	...	...	1	...				
	long	...	...	1	...	...				
	short	...	...	1	...	...				
Pawls, iron, bollard	left	...	1	1	1	...				
	right	...	1	1	1	...				

* *See* Note page 996

Digitized by Google

Spare Moncrieff Wrought-Iron Garrison Carriages, and Component and Spare Parts for the same—*continued.*

Component and spare parts.	R.B.L., 7-in.	R.M.L. 9-in. (Mark II.)	R.M.L. 7-in. (Mark I.)	R.M.L. 7-in. (Mark II.)	R.M.L. 4½-pr., 58 cwt.	Proportions of spare for each: District. per 20 guns, or any lesser No. not less than 10 of each nature.	Detached group of Sub-Districts. per 10 guns, or less No. of each nature.	Sub-District. per 10 guns, or less No. of each nature.	Fort or Battery. per 10 guns, or less No. of each nature.
Pointers, iron, with screws: and steel plate: front		1							
Pointers, iron, with screws: and steel plate: rear		1	1						
Pointers, iron, with screws: front		1		1	1				
Pointers, iron, with screws: rear		1		1	1				
Rings, buffer: india-rubber: 4½ in. × 1½ in. with 1½ in. hole		4						2	
Rings, buffer: india-rubber: 4½ ,, × 1 1/16 ,, 1½ ,,		18						9	
Rings, buffer: india-rubber: 3½ ,, × ⅞ ,, 1¼ ,,					6			3	
Rings, buffer: iron	2	12			4				
Slides L body, iron, without fittings	1	1	1	1	1				
Spindles, iron: bollard, with collar, nuts, and screws				2					
Spindles, iron: bollard, with nuts			2						
Spindles, iron: buffer, with keys		6						3	
Spindles, iron: buffer, with nuts	2				2			1	
Springs, disc, spindle buffer: No. 4	14	48	24					1	
Springs, disc, spindle buffer: ,, 5					16				
Stages, wood, with stays: landing: left	1	1	1	1	1				
Stages, wood, with stays: landing: right			1						
Stages, wood, with stays: loading: central		1		1					
Stages, wood, with stays: loading: front			1						
Stages, wood, with stays: loading: left			1						
Stages, wood, with stays: loading: right			1						
Stops, iron, guide elevating, with screws	1				1				
Studs, iron, pawl bollard, with collars, nuts, and: pins				2					
Studs, iron, pawl bollard, with collars, nuts, and: screws			2						
Trays, wood: shot truck		1							
Trays, wood: side arms		1		2					
Trucks, cast-iron, plain: 30-in. diameter		4							
Trucks, cast-iron, plain: front: 18-in. diameter					2				
Trucks, cast-iron, plain: front: or rear, 21-in. diameter				2					
Trucks, cast-iron, plain: front: right or 20 ,,	2								
Trucks, cast-iron, plain: rear, 24-inch diameter					1				
Trucks, cast-iron, with bevel wheel, left: front, 30 ,,		1							
Trucks, cast-iron, with bevel wheel, left: rear, 30 ,,		1							
Trucks, cast-iron, with bevel wheel, left: front, 21 ,,				1					
Trucks, cast-iron, with bevel wheel, left: rear, 21 ,,				1					
Trucks, cast-iron, with bevel wheel, left: front, 20 ,,	1								
Trucks, cast-iron, with bevel wheel, left: rear, 20 ,,	1								
Trucks, wrought-iron, plain: left, 16 ,,			2						
Trucks, wrought-iron, plain: right, 16 ,,			2						

* 5 per cent., or 1 carriage complete.

* *See* Note page 996.

Digitized by Google

Spare Moncrieff Wrought-Iron Garrison Carriages, and Component and Spare Parts for the same—*continued*.

Component and spare parts.	R.M.L. R.B.L., 7-in.	R.M.L. 9-in. (Mark II.)	R.M.L. 7-in. (Mark I.)	R.M.L. 7-in. (Mark II.)	R.M.L. 4·7-pr., 58 cwt.	Proportions of spare for each District. per 20 guns or any lesser No. not less than 10 of each nature.	Proportions of spare for each Detached group of Sub-Districts. per 10 guns, or less No. of each nature.	Proportions of spare for each Sub-District. per 10 guns, or less No. of each nature.	Proportions of spare for each Fort or Battery. per 10 guns, or less No. of each nature.
GEAR, ELEVATING.									
Arcs, iron, elevating { left				1		* 5 per cent., or 1 carriage complete.		1	
{ right				1				1	
Bars, iron, radius, complete { left	1	1		1	1				
{ right	1	1		1	1				
Bolts, iron, with nut { and collar, cascable		1							
{ connecting links		1							
Collars { cast-iron, bar radius	2				2				
iron { bar radius				2					
{ cascable		2							
{ jamming			1						
Cones, cast-iron, friction { inside	1	1	1	1	1				
{ outside	1	1	1	1	1				
Covers, iron, worm { spindle	1	1							
{ wheel	1	1		1	1				
Guides, iron, elevating, with arc { central	1			1	1				
{ left		1							
{ right		1							
Levers, iron, jamming, with set screw			1						
Links, iron, connecting { front { left		1							
{ right		1							
{ rear { left		1							
{ right		1							
Pinions, iron, elevating { left			1					1	
{ right			1					1	
{ with spindles { and nut	1			1				1	
{ collars, nuts, and pins					1			1	
Pins, iron, with collar and pin { guide, elevating	1			1	1				
{ rod, connecting	1			1	1				
Plates, metal, indicator, with screws				1					
Pointers { steel { elevating arc			1						
{ indicator		1							
{ wrought-iron, indicator	1			1	1				
Rods, iron, connecting { central, with bolts	1			1	1				
{ left		1							
{ right		1							
Rollers, friction { cast-iron { arc, elevating				1	1				
{ guide, elevating	†2				2				
{ metal { arc, elevating		2							
{ guide, elevating		2			1				
{ wrought-iron { guide, elevating				1					
{ arc ,,	1								

* *See* Note page 998. † 1 left and 1 right.

Digitized by Google

Spare Moncrieff Wrought-Iron Garrison Carriages, and Component and Spare Parts for the same—*continued.*

Component and spare parts.	R.B.L., 7-in.	R.M.L. 9-in. (Mark II.)	R.M.L. 7-in. (Mark I.)	R.M.L. 7-in. (Mark II.)	R.M.L. 4½-pr., 58 cwt.	Proportions of spare for each: District. per 20 guns, or any lesser No. not less than 10 of each nature.	Detached group of Sub-District. per 10 guns, or less No. of each nature.	Sub-District. per 10 guns, or less No. of each nature.	Fort or Battery. per 10 guns, or less No of each nature.
Screws, iron, jamming, spindle worm	...	...	1	...	...	* 5 per cent., or 1 carriage complete.			
Shafts, iron { with key and nuts	...	...	1	...	...				
with pinions and nuts	...	1	...	...	...				
Spindles, iron with collar and... ... { nut, worm	1	1	1	1	1				
pin, friction, roller { arc, elevating	1	...	...	1	1				
guide, elevating	1	2	...	1	1				
Stages, wood, laying, with stays	1	1	...	1	1				
Steps, wood, stage, laying	...	1	...	...	...				
Wheels { metal, worm	1	1	1	1	1				
iron, hand	1	1	2	1	1				
GEAR, LOADING.									
Chains, iron, with hook	...	1	...	1	...				
Guards, iron, spur wheel, and pinion ...	...	1	...	...	...				
Pinions, M. cast-iron or steel, spur, 14 teeth	...	1	...	...	...				
Pins, iron, sheave... { cheese-head, with { long	...	1	...	1	...				
collar and pin { short	...	1	...	1	...				
plain	...	1	...	1	...				
Sheaves ... { cast-iron { bottom	...	...	...	1	...				
centre	...	...	...	1	...				
top	...	...	...	1	...				
metal ... { bottom	...	1	...	...	...				
centre	...	1	...	...	...				
top	...	1	...	...	...				
Spindles, iron, with collar, and ... ... { nut, pinion hand-wheel	...	1	...	...	...				
pin, windlass ...	...	1	...	...	...				
Trucks, projectile, iron, complete	...	†1	...	1	...				
Wheels { M. cast-iron or steel, spur, 58 teeth	...	1	...	...	...				
iron, hand	...	1	...	...	...				
Windlass, cast-iron	...	1	...	...	...				
GEAR, RETAINING.									
Hands, friction, brake drum, with bolts ... { iron { left	...	...	...	...	1		... ...	... ...	1
	...	1	...	...	...		... ...	... ...	1
	...	...	...	1	...		... ...	... ...	1
right	...	...	1	...	...		... ...	... ...	1
	...	...	...	...	1		... ...	... ...	1
steel { left	...	...	...	1	...		... ...	... ...	1
right	...	...	...	1	...		... ...	... ...	1

* *See* Note page 996. † With sling

Digitized by Google

Spare Moncrieff Wrought-Iron Garrison Carriages, and Component and Spare Parts for the same—*continued.*

Component and spare parts.	R.B.L., 7-in.	R.M.L. 9-in (Mark II.)	R.M.L. 7-in. (Mark I.)	R.M.L. 7-in. (Mark II.)	4½-pr., 58 cwt.	Proportions of spare for each District, per 20 guns, or any lesser No. not less than 10 of each nature.	Detached group of Sub-Districts, per 10 guns, or less No. of each nature.	Sub-District, per 10 guns, or less No. of each nature.	Fort or Battery, per 10 guns, or less No. of each nature.
Bars, iron, connecting, with bolts ... ... left	1	1	...	1	1				
right	1	1	...	1	1				
Capstan, heads, cast-iron	2	...	...	...	...		... ...	1	
	...	...	...	...	2		... ...	1	
Collars, iron, shaft main...	2	2	...	2	2				
retaining	...	2	...	...	...				
Counterweights, cast-iron, brake lever, with set screws	1	2	2	2	1				
Covers, iron, complete ... ... brake drum ... left	...	1	1	1	...				
right	...	1	1	1	...				
wheel, spur, and pinion clutch ... left	...	...	...	1	...				
right	...	...	...	1	...				
rollers, rack retaining ... left	1	1	...	1	1				
right	1	1	...	1	1				
Cranks, iron, connecting, brake levers	...	2	2	2	...				
Drums, brake, complete ... left...	1	...	...	...	...		... ...	1	
	...	1	...	...	...		... ...	1	
	...	...	1	...	...		... ...	1	
	...	...	...	1	...		... ...	1	
	...	...	...	...	1		... ...	1	
right	...	1	...	...	...		... ...	1	
	...	...	1	...	...		... ...	1	
Guards, iron, brake drum, complete ... left...	...	1	...	1	...				
right	...	1	...	1	...				
Hooks, iron, preventor, with collars and nuts ...	...	...	2	...	...		1		
Levers metal, clutch	...	...	...	2	...				
pointed No. 2 light	...	...	...	...	3		... ...	... ...	
Moncrieff 5 R.M.L. 9-in	...	3	...	...	...		... ...	... ...	
7 R.M.L. 7-in. 4 ft. 1 in. (Mark III.)	...	...	3	...	...		... ...	... ...	
6 R.M.L. 7-in. 4 ft. 4 in.	...	...	...	3	...		... ...	... ...	
4 R.B.L., 7-in.	2	...	...	...	...		... ...	... ...	
iron, brake band	1	2	2	2	1				
shaft, connecting	...	2	2	2	...				
Links, iron, adjusting, brake levers, with pins and keys ... ... pairs	...	2	2	2	...				
Pawls, iron rack retaining left ...	1	1	...	1	1				
rack retaining right ...	1	1	...	1	1				
spur wheel, main shaft ...	...	4	...	...	...				

* 5 per cent., or 1 carriage complete.

* *See* Note page 996.

Digitized by Google

Spare Moncrieff Wrought-Iron Garrison Carriages, and Component and Spare Parts for the same—*continued.*

Component and spare parts.	R.B.L., 7-in.	R.M.L. 9-in. (Mark II.)	R.M.L. 7-in. (Mark I.)	R.M.L. 7-in. (Mark II.)	R.M.L. 4¾-pr., 58 cwt.	Proportions of spare for each: District. per 20 guns, or any lesser No. not less than 10 of each nature.	Detached group of Sub-Districts. per 10 guns, or less No. of each nature.	Sub-District. per 10 guns, or less No. of each nature.	Fort or Battery. per 10 guns, or less No. of each nature.
Pinions, iron, spur ... clutch, 10 teeth ...	...	...	...	2	...	* 5 per cent., or 1 carriage complete.	½ set.		
Pinions, iron, spur ... rack retaining 9 teeth	...	...	...	...	2				
Pinions, iron, spur ... rack retaining 8 ,,	...	2	...	2	...				
Pinions, iron, spur ... shaft ,, 9 ,,	...	2	...	...	...				
Pinions, spindle, hauling down	...	...	1	...	...				
Pinions, steel, spur, rack retaining ... 8 teeth	..	2	...	...	...				
Pinions, steel, spur, rack retaining ... with spindles, collars, and nuts	...	...	2	...	...				
Pins, iron, securing lever clutch	...	...	...	2	...				
Pins, iron, securing spindle pinion hauling down	...	..	1	...	...				
Plates, iron, with screws ... ... boss, brake band ... pairs	...	2	...	2	...				
Plates, iron, with screws ... ... locking, brake lever ...	...	...	2	...	...				
Racks, iron retaining ... cycloidal left	...	...	1	...	...				
Racks, iron retaining ... cycloidal right	...	...	1	...	...				
Racks, iron retaining ... left	1	1	...	1	1				
Racks, iron retaining ... right	1	1	...	1	1				
Rings, hook, preventor ... india-rubber set (of 8) ...	...	...	1	...	...		½ set.		
Rings, hook, preventor ... iron, set (of 6) ...	...	...	1	...	...				
Rollers, rack, retaining ...	...	1	...	...	...		½ set.		
Rollers, rack, retaining ... metal set (of 8)	...	...	...	1	...		½ set.		
Rollers, rack, retaining ... metal set (of 4)	...	...	...	...	1		½ set.		
Rollers, rack, retaining ... iron, set (of 4)	1	1	...	...	...		½ set.		
Screws, iron cover, brake drum, sets ... (of 12)	...	1	...	...	...		1½ set.		
Screws, iron cover, brake drum, sets ... (of 8)	...	...	1	...	...		1½ set.		
Screws, iron cover, brake drum, sets ... (of 10)	...	...	...	1	...		1½ set.		
Screws, iron for springs, wheel, spur	...	12	...	...	...				
Screws, iron links, adjusting, brake levers ...	...	2	2	2	...				
Screws, iron (or spindles) rollers, rack retaining set (of 4)	1	...	...	...	...		½ set.		
Screws, iron (or spindles) rollers, rack retaining set (of 4)	...	...	...	1	...		½ set.		
Screws, iron (or spindles) rollers, rack retaining set (of 4)	...	...	...	...	1		½ set.		
Screws, iron plate, locking, brake lever	...	...	2	...	...		6		
Screws, steel (or spindles) rollers, rack retaining, set (of 4)	...	1	...	...	...		½ set.		
Shafts ... steel, main with nuts	...	1	...	...	...				
Shafts ... iron connecting brake levers ...	...	1	1	1	...				
Shafts ... iron main, with nuts	1	...	...	1	1				
Shafts ... iron retaining, with nuts ...	...	1	...	...	...				
Sockets, iron, lever (with pawls) ... No. 9	...	2	...	...	...		... ...	... ...	1
Sockets, iron, lever (with pawls) ... ,, 10	...	...	2	...	...		... ...	... ...	1
Sockets, iron, lever (with pawls) ... ,, 11	...	...	...	2	...		... ...	... ...	1
Spindles, iron, with nuts ... collars and pins, bar connecting ...	...	...	...	2	2				
Spindles, iron, with nuts ... and collars bar connecting ...	2	2	...	...	...				
Spindles, iron, with nuts ... and collars clutch pinion	...	...	...	2	...				
Spindles, iron, with nuts ... and collars pawl, wheel spur ...	...	4	...	...	...				
Spindles, iron, with nuts ... pawl, rack retaining	2	2	...	2	2				

* *See* Note page 996.

Digitized by Google

Spare Moncrieff Wrought-Iron Garrison Carriages, and Component and Spare Parts for the same—*continued.*

Component and spare parts.	R.B.L., 7-in.	R.M.L. 9-in. (Mark II.)	R.M.L. 7-in. (Mark I.)	R.M.L. 7-in. (Mark II.)	R.M.L. 64-pr., 58 cwt.	Proportions of spare for each District per 20 guns, or any lesser No. not less than 10 of each nature.	Detached group of Sub Districts, per 10 guns, or less No. of each nature.	Sub-District, per 10 guns, or less No. of each nature.	Fort or Battery, per 10 guns, or less No. of each nature.
Springs, steel, pawl — brake drum	4	...	...	...	...	* 5 per cent., or 1 carriage complete.	...	...	2
Springs, steel, pawl — brake drum	...	12	...	...	...		...	...	6
Springs, steel, pawl — brake drum	...	...	8	...	...		...	...	4
Springs, steel, pawl — spur wheel	...	...	...	8	...		...	...	4
Springs, steel, pawl — spur wheel	...	4	...	...	4		...	...	2
Stops, iron, with handle, spur wheel	...	1	...	...	...		...	...	2
Wheels — M. cast-iron or steel, spur, shaft, main, 58 teeth — left	...	1	...	...	...		...	...	
Wheels — M. cast-iron or steel, spur, shaft, main, 58 teeth — right	...	1	...	...	...		...	...	
Wheels — iron, pawl — pinion, spindle, rack retaining	...	...	2	...	...				
Wheels — iron, pawl — shaft main	...	2	...	...	...				
Wheels — iron, pawl — shaft retaining	...	2	...	...	...				
Wheels — iron, pawl — spindle, clutch pinion	...	...	...	2	...				
Wheels — spur — shaft, main, 40 teeth — left	...	...	...	1	...				
Wheels — spur — shaft, main, 40 teeth — right	...	...	...	1	...				
Wheels — spur — hauling down	...	...	1	...	...				
GEAR, TRAVERSING.									
Clutches, metal	...	1	...	...	...				
Collars, iron, shaft, longitudinal, with screws	...	...	2	...	...				
Covers, iron, complete — pinion, bevel, shaft, vertical	...	...	1	...	...				
Covers, iron, complete — wheel and pinion bevel front	1	...	...	1	...				
Covers, iron, complete — wheel and pinion bevel rear	1	...	...	1	...				
Covers, iron, complete — wheel and pinion spur left	...	...	1	...	...				
Covers, iron, complete — wheel and pinion spur right	...	...	1	...	...				
Covers, iron, complete — wheel bevel, front truck	...	...	1	...	...				
Covers, iron, complete — wheel spur left	...	...	1	...	...				
Covers, iron, complete — wheel spur right	...	...	1	...	...				
Guides, iron, lever clutch, with pin and chain	...	1	...	...	...				
Guards, iron, spur wheel front	...	2	...	...	...				
Guards, iron, spur wheel rear	...	2	...	...	...				
Handles, iron, winch No. 12	2	...	...	...	...		...	...	1
Handles, iron, winch ,, 13	...	2	...	...	...		...	...	1
Handles, iron, winch ,, 14	...	...	2	...	...		...	...	1
Handles, iron, winch ,, 15	...	...	...	2	...		...	...	1
Keys, iron, driving shaft	...	...	...	6	...				
Levers, iron, clutch	...	1	...	...	...				

e Note page 996.

Digitized by Google

Spare Moncrieff Wrought-Iron Garrison Carriages, and Component and Spare Parts for the same—*continued.*

Component and spare parts.	R.B.L., 7-in.	R.M.L. 9-in. (Mark II.)	R.M.L. 7-in. (Mark I.)	R.M.L. 7-in. (Mark II.)	R.M.L. 4·4-pr., 58 cwt.	Proportions of spare for each: District. per 20 guns, or any lesser No. not less than 10 of each nature.	Detached group of Sub-Districts. per 10 guns, or less No. of each nature.	Sub-District. per 10 guns, or less No. of each nature.	Fort or Battery. per 10 guns, or less No. of each nature.
Pinions — bevel — M. cast-iron or steel, shaft — longitudinal — long, 14 teeth	...	...	1	...	...				
short, 14 teeth	...	...	1	...	...				
vertical, 15 teeth	...	...	1	...	...		...	...	1
malleable cast-iron or steel, with spindle, for trucks, 8 teeth — front	1	...	...	1	...				
rear	1	...	...	1	...				
metal, shaft — cross, 28 teeth	...	...	1	...	...				
vertical, 28 teeth	...	...	1	...	...				
steel, with spindle, for trucks, 8 teeth — front	...	1	...	...	...				
rear	...	1	...	...	...				
winch handle — M. cast-iron, or steel spur, with wrought-iron spindles, 14 teeth	...	...	2	...	...		...	...	1
malleable cast-iron or steel, bevel, with spindle — front — 12 teeth	...	...	...	1	...		...	...	1
front — 8 ,,	1	...	...	...	...		...	...	1
rear — 9 ,,	...	...	...	1	...		...	...	1
rear — 8 ,,	1	...	...	...	...		...	...	1
wrought-iron, spur, with spindle, 9 teeth — front	...	1	...	...	...		...	...	1
rear	...	1	...	...	...		...	...	1
Pins, iron, joint, lever clutch, with nut	...	1	...	...	...				
Shafts, iron — cross, 2nd motion	...	...	...	1	...				
longitudinal — long	...	...	...	1	...				
short	...	...	...	1	...				
vertical	...	...	...	1	...				
Spindles, iron, wheel spur, intermediate	...	2	...	...	...				
Studs, iron, lever clutch, with nut	...	1	...	...	...				
Wheels, M. cast-iron or steel — bevel — for trucks — front, 18 teeth	...	...	1	...	...				
rear, 26 ,,	...	...	1	...	...				
front — or rear, 25 teeth	2	...	...	...	...		...	...	1
front — 31 teeth	...	...	...	1	...		...	...	1
rear, 40 teeth	...	...	...	1	...		...	...	1
longitudinal shaft, long, front, 30 teeth	...	...	1	...	...				
longitudinal shaft, short, rear, 30 teeth	...	...	1	...	...				
spur — front, 53 teeth	...	1	...	...	...		...	...	1
intermediate, 20 teeth	...	2	...	...	...		...	...	1
rear, with clutch, 53 teeth	...	1	...	...	...		...	...	1
58 teeth	...	...	2	...	...		...	...	1

* 5 per cent., or 1 carriage complete.

* *See* Note page 996.

Digitized by Google

Digitized by Google

SPARE PLATFORMS, GROUND, AND SLIDES L, FOR MEDIUM, PARTS FOR

Component and spare parts.	Platforms, ground.			Slides						
				Wood.						
				R.B.L.						
				7-inch.						
				or R.M.L. 64-pr.						
	Siege, double decked, C pivot, Mark I.	R.M.L. howitzer beds.	Mortar octagonal deck.	7: and 58 cwt.		7½ cwt.				
				No. 11, 4 ft. 3 in. parapet.	No. 12, 3 ft. 6 in. parapet	No. 13, 3 ft. 6 in. parapet. 11 ft.	No. 14 and 40-pr., R.M.L., 80-pr. 5 tons, 64-pr. 58 cwt. also S.B. casemate.	No. 15, 72 cwt., convtd. slide.	No 16, also R.M.L. 80-pr. 5 tons, and 64-pr. dwarf.	No. 17, 40-pr. and S.B. dwarf, also R.M.L. A & B pivots only.
Axles, truck — iron, with split keys, front or rear	...	...	...	4	4	4	2	...	4	4
Axles, truck — steel, with collars and split keys, front or rear	...	...	...	...	...	...	...	...	...	...
	...	...	...	...	...	...	...	...	...	...
	...	...	...	...	...	...	...	...	...	...
	...	...	...	...	...	...	...	...	...	...
	...	...	...	...	...	...	...	...	...	...
Bands, iron — axletree, transporting ...	...	...	...	2	2	2	2	...	2	2
Bands, iron — securing hydraulic buffer — front	...	...	...	1	1	...	...	...	...	...
Bands, iron — securing hydraulic buffer — rear	...	...	...	1	1	...	...	...	...	...
Beams, wood, double	...	...	3	...	...	...	...	...	...	...
Bearings, metal — indicator ...	...	...	...	...	...	...	...	...	...	...
Bearings, metal — shaft — brake ...	...	...	...	...	...	...	...	...	...	...
Bearings, metal — shaft — 1st motion ...	...	...	...	...	...	...	...	...	...	...
Bearings, metal — shaft — 2nd ,, ...	...	...	...	...	...	...	...	...	...	...
Bearings, metal — shaft — 3rd ,, ...	...	...	...	...	...	...	...	...	...	...
Blocks wood, cross, rear	...	...	...	...	...	...	...	...	...	1
Bollards, wood	...	...	...	...	...	...	1	1	1	1
Bolts, iron with collars and nuts — connecting ...	...	4	...	...	...	...	...	...	...	...
Bolts, iron with collars and nuts — flange — front ...	...	...	...	2	2	2	2	...	2	2
Bolts, iron with collars and nuts — flange — rear ...	...	...	...	2	2	2	2	...	2	2
Brackets, with bolts or screws — cast-iron, derrick loading ...	...	...	...	...	...	...	...	...	...	...
Brackets, with bolts or screws — metal — levers — pointer ...	...	...	...	...	...	...	...	...	...	...
Brackets, with bolts or screws — metal — levers — clutch ...	...	...	...	...	...	...	...	...	...	...
Brackets, with bolts or screws — metal — levers — iron pointed, pairs	...	...	...	...	...	...	...	...	...	...
Brackets, with bolts or screws — metal — shaft, brake ...	...	...	...	...	...	...	...	...	...	...
Brackets, with bolts or screws, iron — compressor bars — front ...	...	...	...	...	...	1	...	...	...	...
Brackets, with bolts or screws, iron — compressor bars — rear — left ...	...	...	...	...	...	...	...	...	...	...
Brackets, with bolts or screws, iron — compressor bars — rear — right ...	...	...	...	...	...	...	...	...	...	...
Brackets, with bolts or screws, iron — guide, lever, clutch ...	...	...	...	...	...	...	...	...	...	...
Brackets, with bolts or screws, iron — hydraulic buffer ...	...	...	...	...	...	...	...	...	...	...
Brackets, with bolts or screws, iron — pans, drip — front ...	...	...	...	...	...	...	...	...	...	...
Brackets, with bolts or screws, iron — pans, drip — rear ...	...	...	...	...	...	...	...	...	...	...

* The issue of spare platforms and slides will be confined to Stations abroad.

NOTE.—Where articles are interchangeable with others on the same line for which a

Digitized by Google

RIFLED, AND S.B. ORDNANCE, WITH COMPONENT AND SPARE THE SAME.

L, Traversing.

R.M.L			Iron. R.B.L.					R.M.L.					Proportions of spare for each.			
			7-inch.					7-in. 6½ tons.	64-pr. 64 cwt.							
No. 18, 80-pr. 5 tons, 64-pr. 71 and 58 cwt., 6 ft. parapet.	No. 19, 64-pr. 71 cwt., 21ft. 7 in. parapet.	No. 20, 64-pr. 71 cwt., 6 ft. parapet.	No. 1, 4 ft. 3 in. parapet.	No. 2, 3 ft. 6 in. parapet.	No. 3, 2 ft. 7 in. parapet.	No. 4, 40-pr.‡	No. 5, 20-pr.	No. 7, 6 ft. parapet.	No. 8, Mark III. gun, 6 ft. parapet, with circular buffer.	No. 9, 5 ft 6 in. parapet.	No. 10, 40-pr.	No. 6, S.B. B.L. 32-pr.	District, per 20 guns or any lesser No., not less than 10 of each nature.	Detached group of Sub-districts, per 10 guns or less No. of each nature.	Sub-district per 10 guns, or less No. of each nature.	Fort or Battery, per 10 guns or less No. of each nature.
4	2	4	...	...	...	...	...	...	...	...	...	...	* 5 per cent., or 1 platform or 1 slide complete.	...	...	...
...	...	...	4	4	4	...	...	...	...	...	...	...		1	...	...
...	...	...	...	...	...	4	...	...	...	...	...	...		1	...	...
...	...	...	...	...	...	...	4	...	...	...	...	...		1	...	...
...	...	...	...	...	...	...	...	4	...	...	...	...		1	...	...
2	...	2	2	2	2	...	...	...	4	4	...	...		1	...	...
...	...	...	...	...	...	...	...	...	...	...	4	...		...	...	...
...	...	...	...	...	...	...	...	...	...	2	...	...		...	...	...
...	...	...	...	...	...	...	...	...	1	1	1	...		...	...	...
...	...	...	...	...	...	...	...	...	1	1	1	...		...	...	...
...	...	...	...	...	...	...	...	...	1	...	...	...		...	...	...
...	...	...	...	...	...	...	...	1	2	...	...	...		...	...	...
...	...	...	...	...	...	...	...	2	2	...	...	...		...	...	...
...	...	...	...	...	...	...	...	2	2	...	...	...		...	...	...
...	...	...	...	...	...	...	...	2	...	...	...	...		...	...	...
1	1	...	1	1	1	...	...	...	...	1	...	...		...	...	...
2	2	2	...	...	...	...	...	2	2	2	...	...		...	...	...
2	2	2	...	...	...	...	...	2	2	2	...	...		...	...	...
...	...	...	...	...	...	...	...	1	1	1	...	...		...	...	...
...	...	1	...	...	...	...	...	...	...	...	...	...		...	...	...
...	...	...	2	2	2	...	...	1	1	2	2	...		...	...	...
...	...	...	...	...	...	...	...	1	...	...	...	...		...	...	...
...	...	...	1	1	1	...	...	...	...	...	...	...		...	...	...
...	...	...	1	1	1	...	...	...	...	...	...	...		...	...	...
...	...	...	1	1	1	...	...	...	...	...	...	...		...	...	...
...	...	...	...	...	...	...	...	1	1	...	...	...		...	...	...
...	...	...	...	...	...	...	...	1	...	...	...	...		...	...	...
...	...	...	...	...	...	...	...	...	...	...	1	...		...	...	...
...	...	...	...	...	...	...	...	...	...	...	1	...		...	...	...

and not more than 1 will be allowed for less than 30 guns of the same nature.
supply of spare is laid down, they are shown in *italics*. ‡ Not yet manufactured.

Digitized by Google

Spare Platforms, ground, and Slides L, for Medium, Rifled, and S.B.

Component and spare parts.	Platforms, ground.			Slides						
				Wood.						
				R.B.L.						
				7-inch.						
				or R.M.L. 64-pr.						
				71 and 58 cwt.		71 cwt.				
	Siege, double decked, C pivot, Mark I.	R.M.L. howitzer beds.	Mortar, octagonal deck.	No. 11, 4 ft. 3 in. parapet.	No. 12, 3 ft. 6 in. parapet.	No. 13, 3 ft. 6 in. parapet, 11 ft.	No. 14 and 40-pr., R.M.L., 80-pr. 5 tons, 64-pr. 58 cwt., also S.B. casemate.	No. 15, 7·2 cwt. convtd. slide.	No. 16, also R.M.L. 80-pr. 5 tons, and 64-pr. dwarf.	No. 17, 40-pr. and S.B. dwarf, also R.M.L. A & B pivots only.
Brackets, with bolts or screws, iron — side arms — front — double	...	...	...	...	...	...	...	...	...	...
side arms — front — single	...	...	...	...	...	...	...	...	...	...
side arms — rear — double	...	...	...	...	...	...	...	...	...	...
side arms — rear — single	...	...	...	...	...	...	...	...	...	...
tripper, with collar and split key	...	...	...	...	...	1	...	...	...	...
Buffers, hydraulic	...	...	...	*1*	*1*	...	...	...	...	...
	...	...	...	...	...	...	...	...	...	...
	...	...	...	...	...	...	...	...	...	...
	...	...	...	...	...	...	...	...	...	...
Buffers, front, consisting of — wood, block, angle bar, 4 spindles and keys, with disc springs	...	...	...	...	...	...	...	...	...	...
2 brackets (1 left and 1 right), 2 spindles and keys, with disc springs	...	...	...	...	...	...	...	...	...	...
wood block, 2 spindles, with nuts and keys, with disc springs	...	...	...	...	...	...	...	...	...	...
Buffers, rear, consisting of 2 brackets (1 left and 1 right) — 2 spindles and keys, with disc springs	...	...	...	...	...	...	...	...	...	...
2 spindles and keys, with disc springs	...	...	...	...	...	...	...	...	...	...
2 spindles, with nuts and keys, with disc springs	...	...	...	...	...	...	...	...	...	...
wood block, 2 spindles, with nuts and keys, with disc springs	...	...	...	...	...	...	...	...	...	...
Carlings, wood — beams	...	...	4	...	...	...	...	...	...	...
Carlings, wood — sleepers	...	...	1	...	...	...	...	...	...	...
Catches, iron, buffer, rear, with bolts ...	...	...	...	...	...	...	...	...	...	...
Derricks, iron, loading, with bearer complete	...	...	...	...	...	...	...	...	...	...
Flanges, for trucks, cast iron — front	...	...	...	...	2	2	...	...	...	...
Flanges, for trucks, cast iron — rear	...	...	...	4†	2	2	2	...	4†	4†

NOTE.—Where articles are interchangeable with others on the same line
* *See* Note p. 1008.

Digitized by Google

Ordnance, with Component and Spare Parts for the same—*continued*.

L, Traversing.			Iron.										Proportions of spare for each.			
R.M.L.			R.B.L.				R.M.L.									
			7-inch.				7-in. 6½ tons.	64-pr. 64-cwt.								
No. 18, 80-pr. 5 tons, 64 pr. 71 and 58 cwt., 6 ft. parapet.	No. 19, 64-pr. 71 cwt., 2 ft. 7 in. parapet.	No. 20, 64-pr. 71 cwt., 6 ft. parapet.	No. 1, 4 ft. 3 in. parapet.	No. 2, 3 ft. 6 in. parapet.	No. 3, 2 ft. 7 in. parapet.	No. 4, 40-pr.‡	No. 5, 20-pr.	No. 7, 6 ft. parapet.	No. 8, Mark III. gun, 6 ft. parapet, with circular buffer.	No. 9, 5 ft. 6 in. parapet.	No. 10, 40-pr.	No. 6, S.B. B.L. 32-pr.	District, per 20 guns or any lesser No., not less than 10 of each nature.	Detached group of Sub-districts, per 10 guns or less No. of each nature.	Sub-district per 10 guns, or less No. of each nature.	Fort or Battery, per 10 guns or less No. of each nature.
...	...	...	...	...	...	...	...	...	2	2	1	...				
...	...	...	...	...	...	...	...	1	...	...	1	...				
...	...	...	1	1	1	...	...	1	1	1	...	...				
...	*1*	...	...	...	...	...	...	...	1	...	...	...		1	...	...
...	...	1	...	...	...	...	...	...	1	...	...	...		1	...	...
...	...	...	1	1	1	...	...	...	...	1	1	...		1	...	...
...	...	...	...	...	...	1	1	...	...	...	...	...		1	...	...
...	...	...	...	...	...	...	...	1	...	...	1	...		...	...	...
...	...	...	...	...	...	...	...	...	...	...	...	1		...	...	...
...	...	...	1	1	1	...	...	1	...	...	1	...		...	...	...
...	...	...	...	...	...	1	1	...	1	...	...	...		...	...	...
...	...	...	...	...	...	...	...	...	...	...	...	1		...	...	...
...	...	...	...	...	...	...	...	1	1	1	...	2		...	...	...
...	...	...	...	...	...	...	...	...	...	...	...	...	* 5 per cent., or 1 platform or 1 slide complete.	...	...	...
4†	2	4†	...	...	...	...	...	...	...	...	...	...		...	...	...

for which a supply of spare is laid down, they are shown in *italics*.
† Also front. ‡ Not yet manufactured.

Digitized by Google

Spare Platforms, ground, and Slides L, for Medium, Rifled, and S.B.

Component and spare parts.	Platforms, ground.			Slides						
				Wood.						
				R.B.L.						
				7-inch.						
				or R.M.L. 64-pr.						
	Siege, double decked, Mark I.	R.M.L. howitzer beds.	Mortar octagonal deck.	71 and 58 cwt.		71 cwt.	No. 14, and 40-pr., R.M.L., 80-pr. 5 tons, 64-pr. 58 cwt. also S.B. casemate.	No. 15, 7½ cwt. convtd. slide.	No. 16, also R.M.L. 80-pr. 5 tons, and 64-pr. dwarf.	No. 17, 40-pr. and S.B. dwarf, also R.M.L. A & B. pivots only.
				No. 11, 4 ft. 3 in. parapet.	No. 12, 3 ft. 6 in. parapet,	No. 13, 3 ft. 6 in. parapet, 11 ft.				
Flanges, for trucks — steel — front	...	...	...	...	...	...	...	...	...	...
steel — rear — rear	...	...	...	...	...	...	...	...	...	...
steel — rear — left	...	...	...	...	...	...	...	...	...	...
steel — rear — right	...	...	...	...	...	...	...	...	...	...
metal front	...	...	...	...	...	...	...	...	...	...
iron (in 2 pieces each) — front — left	...	...	...	...	...	...	2	...	...	...
iron (in 2 pieces each) — front — right	...	...	...	...	...	...	...	...	...	...
1 fore and 1 hind — rear — left	...	...	...	...	...	...	...	...	...	...
1 fore and 1 hind — rear — right	...	...	...	...	...	...	...	...	...	...
Keys, iron — forelock pivot, with lanyard	...	1	...	...	...	...	...	...	...	...
split — flat — pivot	...	1	...	...	...	...	...	...	...	...
split — flat — pin, securing	...	4	...	...	...	...	...	...	...	...
split — axles, truck, traversing platform	...	...	...	...	...	...	...	...	...	...
Loops, iron — with nuts	...	...	...	...	...	...	...	...	...	...
Loops, iron — screwed	...	2	...	...	...	...	...	...	...	...
Pads, elastic, pieces, buffer — front	...	...	...	...	...	...	...	...	...	...
Pads, elastic, pieces, buffer — rear	...	...	...	...	...	...	...	...	...	...
	...	...	...	...	...	...	...	...	...	...
Pans, drip, zinc, hydraulic buffer — No. 4	...	...	...	...	...	...	...	...	...	...
Pans, drip, zinc, hydraulic buffer — „ 8	...	...	...	...	...	...	...	...	...	...
Pans, drip, zinc, hydraulic buffer — „ 11	...	...	...	1	1	...	...	...	...	...
Pans, drip, zinc, hydraulic buffer — „ 12	...	...	...	...	...	...	...	...	...	...
Pins, iron, securing pivot	...	4	...	...	...	...	...	...	...	...
Post, hand	...	...	...	...	...	...	2	...	...	2
Pointer, steel	...	...	...	...	...	...	...	...	...	...
Blanks, wood — centre — near	...	1	...	...	...	...	...	...	...	...
Blanks, wood — centre — off	...	1	...	...	...	...	...	...	...	...
Blanks, wood — centre — set	...	...	...	...	...	...	...	...	...	...
Blanks, wood — 18 ft.	16	...	...	...	...	...	...	...	...	...
Blanks, wood — 12 ft.	28	...	...	...	...	...	...	...	...	...
Pivots, iron, with metal plate	1	1	...	...	...	...	...	...	...	...
Plates — iron, pivot	...	1	...	...	...	...	...	...	...	...
Plates — steel, pivot with Lolts	1	...	...	...	...	...	...	...	...	...

NOTE.—Where articles are interchangeable with others on the same line
* See Note p. 1008.

Digitized by Google

Ordnance, with Component and Spare Parts for the same—*continued.*

| L, Traversing. | | |

Spare Platforms, ground, and Slides L, for Medium, Rifled, and S.B.

Component and spare parts.	Platforms, ground.			Slides						
				Wood.						
				R.B.L.						
				7-inch.						
				or R.M.L. 64-pr.						
	Siege, doubled decked, C pivot, Mark I.	R.M.L. howitzer beds.	Mortar octagonal deck.	71 and 58 cwt.		71 cwt.				
				No. 11, 4 ft. 3 in. parapet.	No. 12, 3 ft. 6 in. parapet.	No. 13, 3 ft. 6 in. parapet, 11 ft.	No. 14 and 40-pr., R.M.L., 80-pr. 5 tons, 64-pr. 58 cwt. also S.B. casemate.	No. 15, 7·2 cwt. convtd. slide.	No. 16, also R.M.L. 80-pr. 5 tons, and 64-pr. dwarf.	No. 17, 40-pr. and S.B. dwarf, also R.M.L. A & B pivots only.
Rings, india-rubber, buffer	3½ in. by 2 in., 1 1/16 in. hole	...	...	...	...	...	...	...	...	...
	3½ in. by ⅝ in., 1 in. hole	...	...	...	...	...	...	...	...	...
Screws, coach	8 in.	64	...	...	...	...	...	...	...	...
	5 in.	40	...	...	...	...	...	...	...	...
Sides, wood	near	...	1	...	...	...	...	...	...	...
	off	...	1	...	...	...	...	...	...	...
Sleepers, wood		...	...	4	...	...	...	...	...	...
Slides L, body		...	...	...	1	1	1	1	1	1
Spindles, iron, buffer, with keys	front	...	...	...	...	...	...	...	...	...
	front or rear	...	...	...	...	...	...	...	...	...
	rear	...	...	...	...	...	...	...	...	...
Spindles, iron	buffer, with collar and nuts	front	...	...	...	...	...	...	...	...
		rear	...	...	...	...	...	...	...	...
	bollard, with bolts, nut and collar		...	...	...	...	...	...	...	...
Springs, disc, spindle buffer, No. 6		...	...	...	...	...	...	...	...	...
Stays, iron, centre		...	1	...	...	...	...	...	...	...
Steps	double	front	...	...	...	...	...	...	...	...
		rear	...	...	...	...	...	...	...	...
	wood	side left	...	...	...	1	1	...	...	1	1
		side right	...	...	...	1	1	...	...	1	1
		sighting	...	...	...	...	...	1	...	1	1
Tanks, iron, sponge		...	...	...	...	...	...	...	...	...
Transoms, wood	front	...	1	...	...	...	...	...	...	...
	rear	...	1	...	...	...	...	...	...	...
Trucks	steel	front	...	...	...	...	...	...	...	...
		rear	...	...	...	...	...	...	...	...
	iron	front	...	...	...	2	2	2	...	...
		rear	...	...	...	2	2	2	...	4†	4†
GEAR COMPRESSOR.										
Bars, compressor, iron	...	...	...	...	...	7	...	...	...	...

NOTE.—Where articles are interchangeable with others on the same line
* *See* Note p. 1008. † Also front.

Digitized by Google

Ordnance, with Component and Spare Parts for the same—*continued.*

L. Traversing.			Iron.										Proportions of spare for each.			
R.M.L.			R.B.L.					R.M.L.								
			7-inch.					7-in 6½ tons.	64-pr. 61 cwt.							
No. 18, 80-pr. 5 tons, 64-pr. 71 and 58 cwt., 6 ft. parapet.	No. 19, 64-pr. 71 cwt., 2 ft. 7 in. parapet.	No. 20, 64-pr. 71 cwt., 6 ft. parapet.	No. 1, 4 ft. 3 in. parapet.	No. 2, 3 ft. 6 in. parapet.	No. 3, 2 ft. 7 in. parapet.	No. 4, 40-pr.‡	No. 5, 20-pr.	No. 7, 6 ft. parapet.	No. 8, Mark III. gun, 6 ft. parapet, with circular buffer.	No. 9, 5 ft. 6 in. parapet.	No. 10, 40-pr.	No. 6, B.B. B.L. 32-pr.	District, per 20 guns or any lesser No., not less than 10 of each nature.	Detached group of Sub-districts, per 10 guns or less No. of each nature.	Sub-district per 10 guns, or less No. of each nature.	Fort or Battery, per 10 guns or less No. of each nature.
...	...	...	6	6	6	...	...	...	...	...	...	...				
...	...	...	42	42	42	14	...	28	12	...	28	52				
4†	2	4†	2	2	2	...	...	2	2	2	2	...	* 5 per cent., or 1 platform or 1 Slide complete.	...	...	...

for which a supply of spare is laid down, they are shown in *italics*.
‡ Not yet manufactured.

Digitized by Google

Spare Platforms, ground, and Slides L, for Medium, Rifled, and S.B.

Component and spare parts.	Platforms, ground.			Slides						
				Wood.						
				R.B.L.						
				7-inch.						
				or R.M.L. 64-pr.						
	Siege, double decked, C pivot, Mark I.	R.M.L. howitzer beds.	Mortar, octagonal deck.	71 and 58 cwt.		71 cwt.				
				No. 11, 4 ft. 3 in. parapet.	No. 12, 3 ft. 6 in. parapet.	No. 13, 3 ft. 6 in. parapet, 11 ft.	No. 14 and 40-pr., R.M.L., 80-pr. 5 tons, 64-pr. 58 cwt. also S.B. casemate.	No. 15, 72 cwt. convtd. slide.	No. 16, also R.M.L. 80-pr. 5 tons, and 64-pr. dwarf.	No. 17, 40-pr. and S.B. dwarf, also R.M.L. A & B pivots only.
Collars, iron, compressor pin { thick	...	...	...	...	...	...	...	...	...	...
{ thin	...	...	...	...	...	12	...	...	...	...
Pins. iron, compressor bar, with split key	...	...	...	...	...	2	...	...	...	...
Trippers, iron	...	...	...	...	...	1	...	...	...	...
GEAR RUNNING IN AND OUT.										
Bands, steel, brake	...	...	...	...	...	...	...	...	...	...
Blocks, metal, thrust	...	...	...	...	...	...	...	...	...	...
Clutches, metal	...	...	...	...	...	...	...	...	...	...
Handles. iron, winch { No. 10 ...	...	...	...	...	...	...	...	...	...	...
{ ,, 11 ...	...	...	...	...	...	...	...	...	...	...
Levers, iron { adjusting. brake bands	...	...	...	...	...	...	...	...	...	...
{ brake	...	...	...	...	...	...	...	...	...	...
{ clutch	...	...	...	...	...	...	...	...	...	...
Pawls, iron	...	...	...	...	...	...	...	...	...	...
Pinions, metal { clutch	...	...	...	...	...	...	...	...	...	...
{ shafts, 1st motion ...	...	...	...	...	...	...	...	...	...	...
Pins, { steel, connecting brake bands with collar and split key	...	...	...	...	...	...	...	...	...	...
{ iron, securing lever clutch with chain	...	...	...	...	...	...	...	...	...	...
Pointers, steel, indicator	...	...	...	...	...	...	...	...	...	...
Shafts, iron { 1st motion	...	...	...	...	...	...	...	...	...	...
{ 2nd ,, ...	...	...	...	...	...	...	...	...	...	...
{ 3rd ,, ...	...	...	...	...	...	...	...	...	...	...
{ brake ,, ...	...	...	...	...	...	...	...	...	...	...
Sockets, iron, adjusting brake bands	...	...	...	...	...	...	...	...	...	...
Spindles, iron, pawl, with collar	...	...	...	...	...	...	...	...	...	...
Wheels { pawl	...	...	...	...	...	...	...	...	...	...
{ spur { 2nd motion	...	...	...	...	...	...	...	...	...	...
{ { 3rd ,, ...	...	...	...	...	...	...	...	...	...	...

NOTE.—Where articles are interchangeable with others on the same line
* *See* Note p. 1008.

Digitized by Google

Ordnance, with Component and Spare Parts for the same—*continued.*

L, Traversing.																Proportions of spare for each.	
			Iron.														
R.M.L.			R.B.L.				R.M.L.										
			7-inch.				7-in. 6½ tons.	64-pr. 64-cwt.									
No. 18, 80-pr. 5 tons, 64-pr. 71 and 58 cwt., 6 ft. parapet.	No. 19, 64-pr. 71 cwt., 2 ft. 7 in. parapet.	No. 20, 64-pr. 71 cwt., 6 ft. parapet.	No. 1, 4 ft. 3 in. parapet.	No. 2, 3 ft. 6 in. parapet.	No. 3, 2 ft. 7 in. parapet.	No. 4, 40-pr.‡	No. 5, 20-pr.	No. 7, 6 ft. parapet.	No. 8, Mark III. gun, 6 ft. parapet with circular buffer.	No. 9, 5 ft. 6 in. parapet.	No. 10, 40-pr.	No. 6, S.B. B.L. 32-pr.	District, per 20 guns or any lesser No., not less than 10 of each nature.	Detached group of Sub-districts, per 10 guns or less No. of each nature.	Sub-district per 10 guns, or less No. of each nature.	Fort or Battery, per 10 guns or less No. of each nature.
...	...	...	4	4	4	...	...	...	...	...	...	...	...	...	...	...
...	...	...	10	10	10	...	...	...	...	...	...	...	...	...	...	...
...	...	...	2	2	2	...	...	...	...	...	...	...	...	...	...	...
...	...	...	1	1	1	...	...	...	...	...	...	...	...	...	...	...
...	...	...	...	...	...	...	...	1	2	...	...	...				
...	...	...	...	...	...	...	...	...	2	...	...	...				
...	...	...	...	...	...	...	...	1	1	...	...	...				
...	...	...	...	...	...	...	...	2	...	...	...	...				
...	...	...	...	...	...	...	...	...	2	...	...	...				
...	...	...	...	...	...	...	...	1	1	...	...	...				
...	...	...	...	...	...	...	...	1	1	...	...	...				
...	...	...	...	...	...	...	...	1	1	...	...	...				
...	...	...	...	...	...	...	...	...	1	...	...	...				
...	...	...	...	...	...	...	...	1	1	...	...	...				
...	...	...	...	...	...	...	...	1	2	...	...	...				
...	...	...	...	...	...	...	...	...	1	...	...	...				
...	...	...	...	...	...	...	...	1	1	...	...	...				
...	...	...	...	...	...	...	...	...	1	...	...	...				
...	...	...	...	...	...	...	...	1	1	...	...	...				
...	...	...	...	...	...	...	...	...	1	...	...	...				
...	...	...	...	...	...	...	...	1	2	...	...	...				
...	...	...	...	...	...	...	...	...	1	...	...	...				
...	...	...	...	...	...	...	...	1	1

FITTINGS, COMPONENT AND SPARE PARTS OF ORDNANCE, QUICK FIRING, 4·7-INCH.

Component parts.	No.	Proportion of spare. Per Gun.	Proportion of spare. To No. of guns or less per work.
ORDNANCE, QUICK FIRING, 4·7-INCH, MARK I. AND II. (STEEL, 41-CWT.).			
Carriers (steel, with washer, hinge bolt, washer and keep pin, catch, retaining breech screw (open) with axis pin, socket, set screw, and spiral spring, and nut retaining striker with set screw)	1	...	1 to 10.
Contacts, lever, electric firing (aluminium bronze, consisting of contact bush insulating washer, box bush contact, securing nut and washer, buffer washer, tube protecting lead, armoured cable with 2 unions, 2 washers and nut retaining contact)	...	1	
Extractors (steel, with lever and fixing screw, buffer spiral spring and cover, plate, actuating, with axis pin, washer and split pin and filling piece with 2 fixing screws)	1	...	1 to 6.
Guards, lever, electric firing (bronze, with clamping screw and chain, flat spring with axis pin, and cap protecting contact with axis pin and bracket steadying shield with 2 fixing screws and steadying screw)	1	...	1 to 6.
Levers — cam (steel, with hinge bolt, washer, and keep pin)	...	...	1 to 2.
Levers — electric firing (steel, with axis pin, contact, bush insulating contact, washer, box bush contact, securing nut and washer, buffer washer, tube protecting lead, armoured cable with 2 unions, and 2 washers; and nut retaining contact)	1	...	1 to 6.
Links, cam lever (steel, with axis pin)	...	...	1 to 2.
Needles, striker percussion (steel)	1	...	1 to 6.
Pins, keep — contact, breech screw	...	1	
Pins, keep — extractor (steel), split, for axis pin, plate, actuating	...	...	3 to 2.
Pins, keep — hinge, bolt — lever, cam (steel), split	...	...	3 to 2.
Pins, keep — hinge, bolt — carrier (steel), split	...	...	3 to 2.
Screws — breech (steel, with fixing screw, end plate and 4 fixing screws, cam lever with hinge bolt, washer and keep pin, link cam lever, with axis pin, and bracket supporting with 2 fixing screws, catch cam lever with spiral spring and stop screw, and trigger sear, in two parts, with fixing screw and spiral spring)	1	...	1 to 10.
Screws — fixing — breech screw (steel)	...	...	1 to 2.
Screws — fixing — striker nut (steel)	...	1	
Screws — fixing — trigger sear (steel)	...	1	
Screws — preserving eyebolt (bronze)	1	...	...
Springs — catch, retaining — breech screw, open (steel, spiral) ...	...	...	3 to 2
Springs — catch, retaining — cam lever (steel, spiral)	...	...	3 to 2.
Springs — extractor (steel, spiral)	...	...	3 to 2.
Springs — guard, lever, electric firing (steel, flat)	...	1	
Springs — main, firing (steel, spiral)	...	1	
Springs — trigger sear (steel, spiral)	...	3	

Digitized by Google

Fittings, Component and Spare Parts of Ordnance, Quick Firing 4·7-inch.—*continued.*

Component parts.	No.	Proportion of spare.	
		Per Gun.	To No. of guns or less per work.
Striker, electric and percussion (steel, with needle for striker, bush insulating needle, tube protecting, bush insulating and washer, nut retaining tube with set screw, angle piece for lead with nut and cap, cover protecting lead, contact breech screw with bush insulating, 2 washers, box contact, cover and keep pin, and nut adjusting striker with washer and main spring)	1	2	
Triggers (steel, with axis pin and lanyard, trigger bolt, and bracket with 2 fixing screws)	1	...	1 to 6.
Washers, buffer, lever electric firing (india rubber)	...	6	
IMPLEMENTS.			
Wrenches { A (steel)	1	...	1 to 6.
Wrenches { B ,, ...	1	...	1 to 6.
APPURTENANCES.			
Boxes, battery, electric (wood, with lid, 2 clamping screws, and securing band with 5 fixing screws)	1	...	1 to 6.
Levers, lengthening cam lever (wrought iron) ...	1		
Sights { fore (bronze)	1	...	2 to 5.
Sights { tangent (steel, with 2 range strips)	1	...	2 to 5.

SPARE PARTS FOR 4·7-INCH Q.F. MOUNTINGS.

Description.	No.	Proportion of spare.
CARRIAGES.		
Axles, roller, manganese bronze (with nut and split key).	1	To each mounting.
Keys, cap square, steel (with chain and stud)	2	To each mounting.
Plates, clip, steel, with bolts { front	1	To every 10 or less number of mountings.
Plates, clip, steel, with bolts { rear	1	To every 10 or less number of mountings.
Rollers, steel	1	To each mounting.

Digitized by Google

Spare Parts for 4·7-inch Q.F. Mountings—*continued.*

Description.	No.	Proportion of spare.
CRADLES.		
Brackets, sight { tangent	1	To every 5 or less number of mountings.
fore	1	
Caps, running out spring	1	To every 10 or less number of mountings.
Clamps, tangent sight, automatic	1	To every 5 or less number of mountings.
Glands, piston rod { inner, metal	1	To every 10 or less number of mountings.
outer, steel...	1	
Leathers, packing (set of 5) ... ... sets	2	To each mounting.
Packing, cotton plaited (length of 3 feet), lengths	2	
Piston rod, with nuts and pin	1	To every 10 or less number of mountings.
Plugs { air	1	To every 5 or less number of mountings.
drain	1	
filling	1	
tank...	1	
Plungers, controlling, running out	1	To every 10 or less number of mountings.
Rings, packing, leather, metal	1	
Rods, running out gun, steel	2	To every 5 or less number of mountings.
Springs, running out, with case and bolts ...	1	
Valve keys, with bolt	1	To every 10 or less number of mountings.
ELEVATING GEAR.		
Pinions with spindle, rings friction, collars, spring, nuts and split key.	1	To every 10 or less number of mountings.
Pointers, arc, elevating, metal, with washer and screw.	1	
Shoulder-pieces (complete)	1	
Spindles, worm, elevating, with screw retaining mitre wheel.	1	
Washers, spring, belleville	1	To every 2 or less number of mountings.
Wheels { metal { worm	1	To every 10 or less number of mountings.
metal { hand, also training (unmarked)	1	
mitre { worm spindle	1	
mitre { with spindle for hand wheel.	1	
Worms, steel	1	
TRAINING GEAR.		
Pinions, with spindle and handle for clamp ...	1	To every 10 or less number of mountings.
Rings, friction { ·25 inch thick, metal	4	
·1875 ,, steel	4	
·375 ,, ,, ...	1	
·5 ,, ,, ...	1	
Washers, spring, belleville	1	To every 2 or less number of mountings.

Digitized by Google

LEATHERS FOR 4·7-INCH Q.F. MOUNTINGS.

Packings, Leather.	Diameter, inches.	Diameter of hole, inches.	No. to a set.
Washers, leather—			
Bolt, valve key	1·3	·76	1
Gland, outer	6·59	6·0	1
Plug { filling...	1·0	·625	1
Plug { tank	3·5	3·0	1
Rings, leather, L section—			
Rod, piston	3·9 (flange) 4·8	3·5 deep ·8	1

SPARE STORES ALLOWED FOR WORKING GUNS WHICH FORM THE ARMAMENT OF DISTRICTS, AND FOR MAGAZINES.

Articles.	Proportion.	Remarks.
Vocabulary Section IV.		
Blocks, wood, Bothway, single, 8-in.	5 per cent.*	For guns in emplacements with sunken ways and loading stages.
Methylated spirits ... ... gals.	10 per cent.*	For disappearing carriages.
Oil, mineral ... ... ,,	10 per cent.*	Mountings and hydraulic buffers.
Soda, carbonate, dry ... grains	10 per cent.*	For disappearing carriages.
Water, distilled ... ... gals.	10 per cent.*	For disappearing carriages.
Vocabulary Section V. (1).		
Bags, extractor, projectile	1 per extractor	R.M.L. ordnance.
Brushes, { bore...	1 per battery	For cleaning bore.
piassaba, B.L. { chamber	1 per battery	For cleaning chamber.
Blocks, loading tackle, No. ...	5 per cent.	R.M.L. guns.
Boxes, tube, garrison... ...	10 per cent.	R.M.L. and R.B.L. guns.
Extractors { projectile	2 per district	R.M.L. guns.
Extractors { tube, vent-sealing ...	1 to 6 guns	For axial vented guns.
Hand-spikes { common	15 per cent.	For all natures of guns.
Hand-spikes { metal roller, 7-ft., L.S. ...	10 per cent.	For all natures of guns.
Hand-spikes { wood roller, 6-ft.	10 per cent.	For all natures of guns.
Heads { rammer, R.M.L.	2 per gun.	7-in. and over except 10·4-in.
Heads { rammer and sponge ...	1 per 10·4-in. R.M.L.	
Heads { sponge, R.M.L.	2 per gun.	7-in. and over except 10·4-in.
Jacks, lifting, hydraulic, G.S. ...	Not exceeding 4 per district	General purposes.
Levers, pointed	5 per district	For R.M.L. guns.
Rammers	1 per gun	For B.L., R.B.L., and R.M.L. guns.
Rimers, vent, axial	1 per battery	For axial vented guns.
Ropes, guide, rammer	20 per cent.	For R.M.L. guns 9-in. and upwards.

* To be kept mixed in casks ready for use in Royal Artillery charge. In addition to this the Senior Ordnance Store Officer will maintain a reserve of the various ingredients equal to 10 per cent. required by the Royal Artillery for filling H.P. cylinders and hydraulic buffers.

Digitized by Google

Spare Stores allowed for working Guns which form the Armament of Districts, and for Magazines—*continued.*

Articles.	Proportion.	Remarks.
Scrapers, B.L. ordnance, half round, with brush	1 per 5 or less number of guns	6-inch to 12-inch B.L.
Selvagees, projectile	5 per cent.	B.L. 8-in. and upwards, and R.M.L. 9-in. and over.
Sponges B.L. bore ...	1 per 5 or less number of guns	4-inch to 6-inch.
Sponges B.L. chamber		6-inch to 12-inch.
Sponges R.B.L.	1 per gun	7-inch to 20-pr.
Sponges R.M.L.	1 per gun	All natures except 10·4-inch.
Staves R.M.L. 17·72-inch	1 per gun	For brush, piasaba, rammer, and sponge.
Staves end, B.L.	1 per work	B.L. 6-in. and upwards.
Tackles, loading derricks	1 per sub-district	Where required.
Tackles, loading shields		
Tampeons	1 to 6 guns or less	For all natures of B.L. and R.M.L. guns.
Vent servers	10 per cent.	All natures of R.M.L. except axial vented.
Vocabulary Section V. (2).		
Bags, burster	5 per cent.	B.L. and R.M.L. guns, to replace any found unserviceable when examining shells.
Bottoms, shell conical	10 per cent.	For S.B. guns.
Bottoms, shell cylindrical ...		
Bottoms, shell hemispherical ...		
Fuzes, time, wood	10 per cent.	For all natures of ordnance using wood time fuzes.
Lamps, magazine	1 to 20 lamps, or less number in a work	Magazines.
Lanterns, hand, magazine	1 per sub-district	Magazines.
Primers, vent piece	10 per cent.	For 7-inch and 40-pr. R.B.L. guns.
Tubes friction, copper, solid drawn	10 per cent.	All natures except B.L.
Tubes vent sealing electric, P. ...	10 per cent.	All B.L. guns and R.M.L. axial vented guns.
Tubes vent sealing percussion ...	10 per cent.	All B.L. guns and R.M.L. axial vented guns.
Tubes vent sealing electric, V. ...	10 per cent.	For R.M.L. 17·72-inch, 16-inch and 12·5-inch, Mark II.
Tubes vent sealing friction, V. ...	10 per cent.	
Wads fuze hole, G.S.	25 per cent.	Common shells R.B.L. and R.M.L.
Wads loading hole, diaphragm ...	5 per cent.	S.B. ordnance, except mortars.
Vocabulary Section VII. (1).		
Batteries Le Clanché, firing, 3 cell	1 per work ...	For firing purposes.
Batteries and keys, test and firing	1 per work where the Le Clanché battery is not in use.	For firing purposes.

Digitized by Google

List of Spare Parts for Pump, Air-double, Carriage Garrison Disappearing.

Spare Parts.	Proportion.	Remarks.
Keys, wrought-iron, split, round, loop head — plunger, large $\frac{1}{8}'' \times \frac{3}{4}''$	2 per pump.	
pin, lever, rocking $0{\cdot}2'' \times 1\frac{1}{8}''$	1 per pump.	
Levers, wrought-iron — socket (complete ...	1 per work.	
rocking, Mark II ...	1 per work.	
Plunger, metal, small	1	
Pins, steel, with collar and split key — lever, rocking ...	1 per pump.	
rod, connecting — plunger, upper...	1 per pump.	
rod, connecting — lever, socket ...	1 per pump.	
Springs, P.B. — air...	1	
suction valve — water	1	
Valves, metal — delivery — large ...	1	
delivery — small...	1	
suction — air ...	1	
suction — water ..	1	
Packing, leather, set of 21 sets	2 per pump.	

In tin case consisting of—	Diameters. Outer	Diameters. Of hole.	Depth.	Thickness.	No. to a Set.
	ins.		ins.		
Rings, leather, L section, plunger — large ...	$3\frac{3}{4}$	...	·7	·187	2
Rings, leather, L section, plunger — small ...	$1\frac{5}{8}$	·65	·5	·187	2
Washers, leather — cover, delivery valve	$1\frac{3}{4}$	$1\frac{1}{8}$	...	·187	2
Washers, leather — cover, connection pipes, connecting	$\frac{3}{4}$	...	...	·187	1
Washers, leather — plug guide, water suction valve ...	$2\frac{1}{16}$	$1\frac{3}{4}$	...	·187	2
Washers, leather — pipes, copper — delivery ...	$\frac{7}{16}$	$\frac{5}{16}$	...	·187	4
Washers, leather — pipes, copper — connecting	$\frac{11}{16}$	$\frac{5}{16}$	...	·187	8
			Total	...	21

Digitized by Google

Digitized by Google

3.—STAFF, AND SERVICE AND DEPOT COMPANIES.

CONTENTS.

	PAGE
Establishments	1024
Arms	1024
Materials for Repair, Browning, and Cleaning of Arms	1024
Ammunition	1025
Accoutrements	1025
Articles for Repair of Accoutrements	1026
Signalling Equipment	1026
Musical Instruments	1027
Camp Equipment	1028
Tools, Artificers, and Opening Packages	1028
Miscellaneous Stores	1028
Stores for Instruction in Electricity	1028a
Drill Stores—	
a. Stores for Gun Drill	1029
b. Stores for Gun and Repository Drills, and for General Instruction (Service Companies)....	1030
c. Stores for Laboratory Instruction	1035
d. Stores for General Instruction (Depôts only)	1038
Army Books and Forms for Equipment	1045

Digitized by Google

Establishments.

The Establishments of Garrison Artillery are published from time to time in Army Orders; and, being subject to change, they are not inserted in these Tables.

Arms.*

TABLE 1.	Proportions.
Vocabulary Section I. (1).	
MARTINI-HENRY.	
Carbines, Artillery	1 per company staff serjeant, serjeant, and rank and file.
Implements, action	1 per company.
Jags	1 per carbine.
Protectors, front sight, carbine	1 per carbine.
Reflectors†	1 per 20 or less serviceable carbines.
Sword-bayonets, Martini-Henry carbine..	1 per company staff serjeant, serjeant, rank and file, and trumpeter.
Scabbards { sword-bayonet, Martini-Henry carbine	1 per sword-bayonet.
Scabbards { sword, staff serjeants, steel ...	1 per staff serjeants sword.
Swords, staff serjeants, iron hilt	1 per serjeant major, quartermaster serjeant, serjeant instructor of gunnery, orderly room serjeant, armourer serjeant, paymaster serjeant, serjeant trumpeter, serjeant cook, canteen serjeant, and serjeant master tailor.

* Serjeant clerks to lieutenant-colonels will be armed and accoutred as a serjeant of the company to which they are attached.

† For examining interior of barrels.

N.B.—Issues of unserviceable carbines, with cleaning rod, jag, sword-bayonet and scabbard, will be made for drill purposes to Royal Artillery Depôts on the authority of the General Officer Commanding, and according to local requirements.

Materials for Repair, Browning, and Cleaning of Arms.

As detailed in Appendix VIII., Part 1.

N.B.—Materials for repair and browning of arms are drawn by the depôt companies, except at stations where there are no depôt companies, in which case they are drawn by the Officer Commanding Royal Artillery in the district. *See* paragraph 4.

Digitized by Google

Ammunition.

TABLE 2.	Proportions.
Gun.	
Rounds, for practice	*See* paragraphs 116 to 152.
Small-arm.	
Cartridges, small-arm: ball, Martini-Henry carbine: Service ...	20 rounds per carbine.
Cartridges, small-arm: ball, Martini-Henry carbine: Practice	According to Section V., Part 1.
Cartridges, small-arm: blank, Martini-Henry	

Accoutrements.

TABLE 3.	Proportions.
Vocabulary Section I. (2).	
Belts*: pouch, buff, G.S.	1 per rank receiving staff serjeants swords.
Belts*: waist, buff, V.E., patt. '82, G.S.	1 per company staff serjeant, serjeant, and rank and file.
Belts*: waist, buff, V.E., O.P. ...	1 per trumpeter.
Belts*: waist, warrant officers, Artillery	1 per rank receiving staff serjeants swords.
Bottles: water, enamelled	All ranks.
Bottles: zinc, oil	1 per carbine.
Braces, buff, V.E., patt. '82: serjeants and rank and file, left ...	1 per valise, company staff serjeant, serjeant, and rank and file.
Braces, buff, V.E., patt. '82: serjeants and rank and file, right ...	
Braces, buff, V.E., patt. '82: staff ... ... left ...	1 per valise, trumpeters.
Braces, buff, V.E., patt. '82: staff ... ... right ...	
Frogs, buff, sword-bayonet, Artillery ...	1 per non-commissioned officer and man, except staff serjeants.
Knots, sword, buff, G.S.	1 per staff serjeants sword
Pouches: writing materials, Artillery ...	1 per warrant officer and staff serjeant.
Pouches: ammunition, buff, V.E., patt. '82.	2 per company staff serjeant, serjeant, and rank and file.
Slings, carbine, buff, Artillery	1 per carbine.
Straps, buff: V.E., patt. '82: great coat and mess tin supporting	2 per valise, and 1 per rank receiving staff serjeants swords.
Straps, buff: water bottle	2 per valise.
Valises, patt. '82, japanned	1 per water bottle.
	All ranks except those receiving staff sergeants swords.

* White enamelled belts will continue in use until stock is issued and worn out.

Digitized by Google

Articles for Repair of Accoutrements.

TABLE 4. Annual Supply.	Per Company. Service.	Depôt.
Vocabulary Section I. (2.)		
Billets, buff, pouch, V. E. patt. '82	3	4
Buckles, brass: brace, ring barred	12	16
Buckles, brass: frog	2	3
Buckles, brass: strap V. E., greatcoat and mess tin	3	4
Buckles, brass: valise and front strap	12	16
Buckles, brass: waistbelt, V. E., patt. '82	2	3
Buckles, iron, valise	36	44
Buttons, leather, sling, buff	2	3
Bees, brass, pouch, V. E.	12	16
Loops, brass: valise	3	4
Loops, brass: waistbelt, V. E., triangular	4	6
Patches, leather: pouch, buff	12	16
Patches, leather: waistbelt, buff	12	16
Pieces, leather: black 2¼ in. × ½ in. (for valise flap)	3	4
Pieces, leather: buff 5½ in. × ⅜ in. (for sling)	39	48
Pieces, leather: buff 5½ in. × ⅜ in. (for waist belt)	4	6
Pieces, leather: buff 4½ in. × 1⅛ in. (for pouch)	12	16
Pieces, leather: buff 4¼ in. × ¾ in. (for great coat and mess tin strap)	12	16
Pieces, leather: buff 3 in. × ½ in. (for great coat and mess tin, and supporting and mess tin straps)	12	16
Safes, waistbelt, buff, infantry, S. and R. and F., patt. '82	3	4
Straps, black, V. E., patt. '82, valise	10	13
Straps, buff, frogs, artillery	3	4

Signalling Equipment.

(*Referred to in paragraph* 242, *Part* 1.)

TABLE 5.	Per Set*	Remarks.
Vocabulary Section IV.		
Books† Manual of Instruction	4	119 A., with 2 sheets of carbon paper each.
Books† Message forms	4	
Bottles, tin, oil, with screw top, 2 quarts	1	
Cases, message book	2	On waist belt.
Chests, signalling stores	1	
Flags, signalling, army: blue 3 feet square	2	
Flags, signalling, army: blue 2 ,, ,,	2	
Flags, signalling, army: white, with stripe 3 feet square	2	
Flags, signalling, army: white, with stripe 2 ,, ,,	2	
Flags, signalling, army: poles 5 feet 6 inches	5	
Flags, signalling, army: poles 3 ,, 6 ,,	5	
Heliographs, 5-inch (with stand)‡	2	
Horns, fog	2	
Lamps, bull's eye, signal (with stand)	4	

* For the number of sets for each Royal Artillery District, *see* Appendix VI.
† Supplied by Stationery Office.
‡ Supplied only to Malta.

Digitized by Google

Signalling Equipment.

Table 5.—*continued.*	Per Set*	Remarks.
Locks, pad, iron, small	1	
Methylated spirits‡ ... ...pints	12§	
Oil, colza‡ ... ...pints	30**	
Oxygen mixture‡ ... ... lbs.	24§	
Tubing, india rubber, ⅝-inch‡ ... ...yards	10	
Wheels, cypher	2	
Wick ‡ common‡ ... ... lbs.	2§	
Wick ‡ round 1½ inch ... ...yards	10**	
Vocabulary Section VI.		
Cotton, waste ... ... lbs.	3**	
Scissors, lamp	2	In addition, 2 are supplied to Malta for lime-light apparatus.
Vocabulary Section VII. (1.)		
Apparatus, limelight‡ — Bags { gas	4	
Bags { pressure	2	
Bottles, cleansing gas	2	
Cases { brass	2	
Cases { iron	2	
Cases { tin	2	
Cylinders, lime pencils	2	
Flasks	2	
Lamps	2	
Pencils ... ... doz.	2	
Retorts, copper	4	
Stands, telescope, signalling	2	
Telescopes, signalling	2	

* For the number of sets for each Royal Artillery District, *see* Appendix VI.
‡ Supplied only to Malta.
§ Twelve months supply.
‖ Supplied by Army Service Corps.
** Sufficient for 4 lamps for 150 hours. Classes using a greater or less number of lamps will draw in proportion.

Musical Instruments.

TABLE 6.	Proportions.
Vocabulary Section I. (3.)	
Bugles	1 per trumpeter and 12 spare per depôt company.*
Pitch pipes	1 per depôt company.
Strings, bugle, Royal	1 per bugle and 1 per trumpet.
Trumpets	1 per serjeant trumpeter and trumpeter, and 12 spare per depôt company.*
Tuning forks	1 per depôt company.

* 3 additional will be allowed for the Adjutants Detachment School of Gunnery at Shoeburyness, to which boys are posted for training.

Digitized by Google

Camp Equipment and Intrenching Tools.

Camp equipment and intrenching tools when required for camps, in time of peace, will be issued in the proportions laid down in Appendix III., Part 1.

Tools, Artificers, and Opening Packages.

TABLE 7.	Proportions.
Vocabulary Section, III.	
Chests, tool, filled* { No. 1 B.	2 per head-quarter station } In accordance with paragraph 238, Part 1.
„ 3 B.	3 „ „ „ }
„ 6 B.	}
„ 11 D.	1 „ „ „ }
„ 12 { C. ... ... / D. ... ... }	}
Chisels, ripping	1 per company } Opening packages.
Drivers, screw, G. S. 9-inch	1 „ „ }
Forges, armourers, Martini-Henry	1 per depôt company.
Hammers, riveting, 24-oz.	1 per company } Opening packages.
Knives, laboratory	1 „ „ }

* Devonport, Portsmouth, Sheerness, and Gibraltar will have a double supply of tools for the separate commands.

Miscellaneous Stores.

TABLE 8.	Per Company. Service.	Per Company. Depôt.	Remarks.
Vocabulary Section IV.			
Brushes, stencil	2	2	Marking valises.
Chests, { R. A. records	...	6	
Chests, { schoolmasters	...	1	
Plates, stencil, paper	4	4	2 for marking back and 2 for front of valises
Vocabulary Section VI.			
Handcuffs, common ... ... pairs	1	1	
Stamps, brass or gunmetal on wood, figures, 0 to 8, ¼-in. ... sets	1	1	
Stamps, brass or gunmetal on wood, letters, 1 letter, ¼-in. (*Territorial Division*)	...	...	As required.
Stamps, brass or gunmetal on wood, letters, 2 letter, ¼-in. (R.A.)	1	1	
Stamps, brass or gunmetal on wood, letters, 3 „ ¼-in. (Dep.)	...	1	
Stamps, steel for wood, figures, 0 to 8 ¼-in. ... sets	1	1	
Stamps, steel for wood, letters, 1 letter, ¼-in. (*Territorial Division*)	...	...	As required.
Stamps, steel for wood, letters, 2 letter, ¼-in. (R.A.	1	1	Stamps for marking arms are included in the armourers forge.
Stamps, steel for wood, letters, 3 „ ¼-in. (Dep.)	1	1	

Digitized by Google

Stores for Instruction in Electricity.*

(*Referred to in paragraph* 112A.)

TABLE 9.	No.	Remarks.
Batteries, Le Clanche, firing, single, cell	4	
,, ,, testing ,, ...	2	
,, Daniell's telegraph...	1	
,, Groves, cells ebonite	2	
,, ,, ,, porous	2	
,, ,, connectors	2	
,, ,, ates { platinum	2	
,, ,, ates { zinc	2	
Battery and key, test and firing	1	
Condensers, one-third, Microfarad	1	
Coils { firing, 100 ohms	1	
Coils { induction, small for instructional purposes	1	
Coils { resistance, 10,000 ohms...	1	For Wheatstons bridge
Connectors, double, brass ... ... doz.	1	
Exploders, dynamo, electric, quantity	1	
Fittings, test table, keys, reversing	1	
Galvanometers { Astatic, 1,000 ohms	1	
Galvanometers { detector { quantity and intensity	1	
Galvanometers { detector { 3-coil	1	
Galvanometers { reflector, 2,000ω 2°...	1	
Galvanometers { tangent	1	
Keys, firing, land service	1	
Lamps, electric, 4-volts	1	
Magnets { electro, horse shoe, with movable cores	1	
Magnets { steel, bars, 8-in. ... ... pairs	1	
Motors, small	1	
Salammoniac ... ... lbs.	3	
Sulphate of copper ... ... ,,	2	
Sulphuric acid, dilute ... ... pints	3	
Tubes, Geisler's, vacuum	3	
Wires { covered { A 4	6	
Wires { covered { B 1	10	
Wires { covered { B 4	10	
Wires { uncovered { No. 12	1	
Wires { uncovered { ,, 13	1	
BOOKS.		
Elementary Lessons on Electricity and Magnetism 24th Edition, (by Silvanas Thompson)	1	
Practical, Electricity, (by Ayrton)	1	
Electricity in the Service of Man (by Urbanetzhy)	1	
The Telephone, (by Preece and Maier)	1	
Manual of Electric Search Lighting, (by Hipposley, R.E. Institute)	1	

* Allowed to the following stations:—

Southern District ...	{ Portsmouth ...	1 Set.
	{ Isle of Wight ...	1 ,,
Western District		1 ,,
South Eastern District		1 ,,
Malta		1 ,,
Gibraltar		1 ,,

Digitized by Google

DRILL STORES.

To be accounted for in the returns of miscellaneous stores in possession of the head-quarters of Royal Artillery Districts.

(a.) Stores for Gun Drill.

TABLE 9a.	Proportions.
Vocabulary Section IV.	
Brushes, water carriage	1 per gun for cleaning the projectile.
Vocabulary Section V. (1.)	
Ordnance, R. B. L. — Blocks, breech, 40-pr. side closing, drill	1 per 40-pr. R. B. L. side closing gun, from which drill is carried on.
Ordnance, R. B. L. — Pieces, vent, drill, 40-pr ...	1 per 40-pr. R.B.L. gun, with vent piece, from which drill is carried on.
Vocabulary Section V. (2)	
Cartridges — drill	Sufficient cartridges to make up *one full* charge for all guns, and 1 spare to every 5 of each nature supplied.
Cartridges — Q.F. dummy drill — 6-pr. ...	1 per gun and
Cartridges — Q.F. dummy drill — 3-pr. ...	1 spare to every 5 guns of each nature.
Cases — cartridge, No. 4	2 per gun, 80, 64, and 40-pr. R.M.L., and 40-pr. R.B.L.
Cases — powder, cylindrical, Z*	2 per 17·72 in. R.M.L. gun.
Cylinders, cartridge — B.L.	4 per 12-in. and 10-in., 2 per 9·2-in. and 8-in., and 1 per 6-in. gun.
Cylinders, cartridge — R.M.L.	4 per 16-in., 2 per 12·5-in. and 10·4-in., and 1 per 12-in. to 7-in.
Gas checks, R. M. L. 17·72 inch	2 per 17·72 in. gun,
Plugs, fuze hole, drill	1 per gun from which drill is carried on, and 1 spare to 5 such guns.
Primers, vent piece, drill	2 per 7-in., and 40-pr. with vent piece, R.B.L. guns from which drill is carried on.
Range-finders, depression, Mark I... ...	1 per Gunnery Instructor, for instruction of R.A.
Shells, empty, common†	2 per 17·72-in. R.M.L., and for other natures, B.L. and R.M.L., 1 per gun from which drill is carried on.
Tackles	*See* Equipment for 6·6 in., 80, 64 and 60-pr. R.M.L. guns.
Tubes — friction drill	1 per gun from which drill is carried on and 1 spare to 5 such guns.
Tubes — vent sealing — electric, V, drill ...	25 per 16-in. and 50 per 17·72 in R.M.L. guns.
Tubes — vent sealing — friction, V, drill ...	2 per each 17·72 in. and 16 in. R. M. L. guns.
Tubes — vent sealing — electric, P, drill ...	3 per gun, 6-inch to 12-inch B.L.
Tubes — vent sealing — percussion, drill ...	3 per gun, 4-inch to 12-inch B.L.

* Unserviceable articles, if complete and sufficiently good for drill purposes, and of latest patterns, may be supplied.

† With guns for which "Drill Shells" have been approved, these latter will be used instead of the service shells.

Digitized by Google

(*b.*) Stores for Gun and Repository Drills, and for General Instruction. (Service Companies.)

(*Referred to in paragraph* 111.)

TABLE 0b.	No.	Remarks.
Vocabulary Section II. (2).		
Carts, sling	1	
Mallets, tent	6	
Wagons, sling, 6 tons	1	
Vocabulary Section III.		
Axes, pick, helved	2	Required when erecting light sheers.
Hammers, claw, 28-oz....	2	
Pincers, carpenters ... ...pairs	1	
Shovels, universal, helved	4	Required when erecting light sheers.
Spanners, McMahon, 15-inch	1	
Spikes, marline, iron, 12-inch	12	
Vocabulary Section IV.		
Brushes, water carriage	...	1 per gun for cleaning the projectile.
Blocks, wood — Bothway — 12-inch double (in parts)	1	
Bothway — 12-inch single	1	
Bothway — 12-inch double	1	
Bothway — 12-inch treble	2	For erecting light sheers.
Bothway — 8-inch double	2	
Bothway — 8-inch single	2	
Snatch — 15-inch	2	
Snatch — 12-inch	2	
Charcoal — alder — ground	1	Specimen of each in bottles.
alder — whole...	1	
dogwood — ground	1	
dogwood — whole	1	
Cordage — hawser, 3-strand — tarred — 2½-inch fathoms	113	For general purposes.
tarred — 1½ ,, ,, ...	113	
tarred — 4½ ,, ,, ...	113	In two half coils for guys.
tarred — 2½ ,, ,, ...	113	In two half coils for runners.
tarred — 2½ ,, ,, ...	75	In three lengths of 25 fathoms.
white — 1 ,, ,, ...	48	For anti-twister.
white — 4 ,, ,, ...	113	For main tackle.
white — 4 ,, ,, ...	25	For head lashing of sheers.
spunyarn ... ... lbs.	2	For light sheers.
spunyarn ... ... lbs.	12	For making Selvagees, &c.
Grease, Field's ... ... kegs	1	
Paint, lead, red ... ... lb.	1	

Digitized by Google

(*b.*) **Stores for Gun and Repository Drills, and for General Instruction. (Service Companies.)**—*continued.*

TABLE 9b—*continued.*	No.	Remarks.
Saltpetre { rough	1	Specimen of each in bottle.
Saltpetre { refined	1	Specimen of each in bottle.
Sulphur, refined	1	
Timber, spars { 40 feet by 13 inches mean diam.	2	For sheer legs.
for sheers and { 25 feet by 7 inches	1	For derrick.
derricks { 30 feet by 9 inches...	1	
Twine, whipping... ... ... lb.	1	
Vocabulary Section V. (1).		
Boxes { grease, 3-lb	1	
Boxes { obturating pads, 5-inch	1	
Boxes { Vesuvian matches	1	
Brushes, piasaba, R.M.L. 80-pr.	2	
Buckets, sponge, garrison	3	
Caps, sponge, No. 8	2	
Capstans, crab	1	
Carriages, garrison, R.M.L. 64-pr., 58 cwt., common, wood	4	
Cases, cartridge, No. 4...	...	2 per gun, 80, 64, and 40-pr. R.M.L. and 40-pr. R.B.L.
Clinometers, Watkin	1	
Cups, R.B.L. guns { 7-inch	1	
Cups, R.B.L. guns { 40-pr.	1	
Cups, R.B.L. guns { 40-pr. side closing	1	
Extractors { tin cup { crosshead	1	
Extractors { tin cup { hook	1	
Extractors { tube { vent sealing	1	
Extractors { tube { ,, ,, V. and M. ...	1	
Extractors { tube { P.	1	
Extractors { tube { P. special	1	
Filters, hydraulic, jack...	1	
Frames, store, hydraulic jack, G.S....	1	
Gaskets, crab, capstan	2	
Gyns, triangle, with appurtenances { 18 ft. heavy	1	
Gyns, triangle, with appurtenances { 18 ft. light	1	
Handspikes, common { 7 feet	16	
Handspikes, common { 6 feet	40	
Jacks, lifting { hydraulic G.S., 10 tons	2	
Jacks, lifting { screw, Clerk's	1	
Lanyards, friction tube, garrison { 1 ... 1 / 2 ... 1 / 3 ... 2 }	4	
Levers { 14 feet	2	
Levers { 12 ,, ...	2	
Mauls, iron, hooped	8	
Ordnance, B.L. { Boxes, slide, 5-inch, Mark II.	1	
Ordnance, B.L. { Discs, pad, obturating, 5-inch	1	
Ordnance, B.L. { Locks, percussion, 5-inch ...	1	
Ordnance, B.L. { Pads, obturating, 5-inch ...	1	
Ordnance, B.L. { Rings, carrier, 5-inch, Mark II.	1	
Ordnance, B.L. { Screws, breech, 5-inch, Mark II.	1	

Digitized by Google

(*b.*) Stores for Gun and Repository Drills, and for General Instruction. (Service Companies)—*continued.*

TABLE 9b—*continued.*	No.	Remarks.
Ordnance large: R.M.L. 64-pr., 58 cwt	2	For drill and shifts.
Ordnance large: S.B.B.L., 32-pr., cups, obturating,	1	
Ordnance S.B.: 68-pr., 95 cwt.	1	For elementary instruction.
Ordnance S.B.: 32-pr., 58 cwt.	2	If available.
Planks, moving guns: half, 6-ft. × 12-in.	8	
Planks, moving guns: half, 4 ,, × 12 ,,	4	
Planks, moving guns: whole, 10 ,, × 17 ,, fir	12	
Planks, moving guns: whole, 10 ,, × 17 ,, oak	6	
Plugs, vent	2	
Posts, picket, 5 feet	6 36	Holdfasts for light sheers.
Prickers, vent, 12-inch	2	
Rammers, R.M.L. 64-pr.	2	
Range-finders, depression	1	
Rimers, vent, axial	1	
Rollers, ground: 6-ft. × 10-in. elm	4	
Rollers, ground: 3 ,, × 6 ,, ,,	4	
Rollers, ground: 2 ,, × 5 ,, sabicu	3	
Rollers, ground: 14 ,, × 5 ,, ,,	2	
Ropes: drag, heavy pr.	8	
Ropes: parbuckling, 18 fathoms, 4-inch	4	
Scotches: large	20	
Scotches: medium	30	
Scotches: small	30	
Selvagees, ordinary	4	
Shoes, sheer, wood: for feet of sheers	2	
Shoes, sheer, wood: for foot of derrick	1	
Shot, R.M.L.: case, 80-pr.	1	With removable lid.
Shot, R.M.L.: palliser, 9-inch (studless)	1	
Shot, R.M.L.: palliser, 9 for gas-check studded	1	
Skids, fir: 20 ft. × 15 in. square	2	
Skids, fir: 20 ,, × 9 ,, ,,	2	
Skids, fir: 6 ,, × 12 ,, ,,	10	
Skids, fir: 4 ,, × 12 ,, ,,	10	
Skids, oak: 3 ft. × 6 in. square	8	
Skids, oak: 5 ,, × 6 ,, × 5 in.	4	
Skids, oak: 3 ,, × 9 ,, × 6 ,,	8	
Skids, oak: 3 ,, × 6 ,, × 3 ,,	8	
Skids, oak: 3 ,, × 5 ,, × 4 ,,	8	
Skids, dismounting: 10 ft. × 8 in. × 13 in.	1	
Skids, dismounting: 14 ,, × 8 ,, square	8	
Slings, chain, 12 to 25 tons: breech	1	
Slings, chain, 12 to 25 tons: muzzle	1	
Slings, rope: 6-in., 12 ft long	5	For light sheers.
Slings, rope: 6 ,, 5 ,, ,,	1	
Slings, rope: 5 ,, 5 ,, ,,	1	
Slings, rope: 4 ,, 5 ,, ,,	1	
Spikes, gun: common	1	
Spikes, gun: spring "C"	1	
Sponges, 64-pr., wood stave, 58 cwt.	2	
Straps, tube box, long	2	
Tackles: luff, 14 fathoms	5	
Tackles: whip upon whip	2	
Tampeons, R.M.L. 80-pr.	2	
Thimbles, round, to take hook of 15-inch block	3	For light sheers.

Digitized by Google

(*b.*) Stores for Gun and Repository Drills, and for General Instruction. (Service Companies)—*continued.*

TABLE 9b—*continued.*	No.	Remarks.
Vent Servers, with lanyard	2	
Wadhooks, S.B., 8-in. gun	2	
Wads, wedge 9-inch	1	
Wads, wedge 8 ,,	1	
Wagons, platforms	1	
Vocabulary Section V. (2).		
Adapters, shell rifled	1	
Adapters, shell S.B.	1	
Bags, burster B.L. 6-inch dowlas cloth	1	
Bags, burster B.L. 6-inch serge	1	
Bags, burster R.M.L. 64-pr. dowlas cloth	1	
Bags, R.M.L. 9-inch serge, studded	1	
Bags, R.M.L. 9-inch ,, studless	1	
Bags, R.M.L. 9-inch silk cloth	1	
Bags, guncotton, waterproof	1	
Boxes, tube, garrison	2	
Cartridges, drill, R.M.L. 64-pr., 8 lb.	2	
Cartridges, quick-firing 6-pr., shell	1	
Cartridges, quick-firing 6-pr. practice	1	
Cartridges, dummy 3-pr. shell	1	
Cases, powder, 100 lb.	1	
Cylinders, detonator, No. 8, for 4 (with 2 feet of safety fuze and rectifier)	1	
Discs, base plug large	1	
Discs, base plug small	1	
Fuzes, electric, No. 14	1	
Fuzes, direct action, delay, No. 10	1	
Fuzes, Armstrong, base, No. 9	1	
Fuzes, percussion, base of shell dummy Hotchkiss	1	
Fuzes, percussion, base of shell dummy Nordenfelt	1	
Fuzes, section electric, No. 14	1	
Fuzes, section percussion direct action, delay, No. 10.	1	
Fuzes, section percussion Armstrong, base, No. 9	1	
Fuzes, section percussion, base of shell Hotchkiss	1	
Fuzes, section percussion, base of shell Nordenfelt	1	
Fuzes, unserviceable, time, wood	100	
Gaschecks, R M.L. 9-inch automatic I.	1	
Gaschecks, R M.L. 9-inch ,, II.	1	
Gaschecks, R M.L. 9-inch Mark I.	1	
Gaschecks, R M.L. 9-inch ,, II.	1	
Gaschecks, R M.L. 6·3-inch	1	
Gaschecks, R M.L. 40-pr.	1	
Guncotton, dry primers, one perforation, 1¼-in × 1¼ in.	1	
Guncotton, wet slabs, unperforated, 6¼-in × 6¼-in. × 1¼-in.	1	
Gunpowder, specimens in glass bottles, E.X.E.	1	About 2 ozs. in bottle.
Gunpowder, specimens in glass bottles, L.G.	1	
Gunpowder, specimens in glass bottles, M.G.[1]	1	
Gunpowder, specimens in glass bottles, P.	1	
Gunpowder, specimens in glass bottles, S.P.	1	

Digitized by Google

(*b.*) Stores for Gunand Repository Drills, and for General Instruction. Service Companies)—*continued.*

TABLE 9b—*continued.*		No.	Remarks.
Gunpowder, specimens in glass bottles	P.[2]	1	About 2 ozs. in bottle
	Prism[1], black	1	
	Prism[2]	1	
	Prism[1], brown	1	
	Q.F.	1	
	R.F.G.	1	
	R.F.G.[2]	1	
	R.L.G.	1	
	R.L.G.[2]	1	
	R.L.G.[4]	1	
	Rifle pistol	1	
	S.B.C.	1	
Implements, fuze and shell	Spanners nut, 7-in.	1	
	gas-check plug, 64-pr.	1	
Matches, Vesuvian	packages	1	
Primers	vent piece	1	
	vent sealing, electric	1	
	vent sealing, mechanical	1	
	vent sealing, section, electric	1	
	vent sealing, section, mechanical	1	
Shells	R.M.L., empty, common, 64-pr.	2	
	filled, sections R.B.L., 40-pr., segment	1	
	R.M.L. 7-inch common	2	
	R.M.L. 7-inch shrapnel	1	
	R.M.L. 2·5 ,, ,,	1	
Tubes friction, copper	long	1	
	short	1	
	7-pr.	1	
	solid drawn	1	
friction, drill		3	
vent-sealing	electric, P.	12	
	,, P. drill	1	
	,, V.	12	
	,, V. drill	1	
	friction, V.	1	
	,, V. drill	1	
	percussion	1	
	,, drill	1	
vent-sealing, sections	electric, P.	1	
	,, V.	1	
	friction, V.	1	
	percussion	1	
Wads	common	2	
	R.B.L. sockets	2	

Vocabulary Section VI.

Boards, black, musketry instruction	1	
Chalk, prepared, white	boxes	1	
Compasses, chalk	1	
Easels, musketry instruction	1	

Digitized by Google

(b.) Stores for Gun and Repository Drills, and for General Instruction. (Service Companies.)—*continued.*

TABLE 9b—*continued.*	No.	Remarks.
Pointers, 6 feet	1	
Rulers, flat, lancewood, 3 feet	1	
Vocabulary Section VII.		
Batteries and keys, test and firing	1	
Boards, drawing, antiquarian	1	
Instruments, drawing, regimental schools ...	1	
Rods, measuring, common, 6 feet	1	
Scales, mathematical, No. 3, Marquoi	1	
T Squares, 36-inch	1	
Tapes, measuring, 50 feet	1	
Thermometers { common	1	
Thermometers { wet and dry bulb	—	
Wires, covered, B. 6 ... ... yds.	100	
MODELS.		
Blocks, wood { bothway { 4½-inch single ...	2	
Blocks, wood { bothway { 4½ ,, double ...	2	
Blocks, wood { bothway { 4½ ,, treble ...	2	
Blocks, wood { rope, strapped { 3-inch double ...	2	
Blocks, wood { rope, strapped { 3 ,, treble ...	2	
Blocks, wood { snatch, 4½-inch	6	
Cordage, white, 1-inch ... ... fathoms	60	
Gaskets, crab, capstan	2	
Planks, whole, 2¼-ft. × 4½-in. × ¾-in.	10	To be made up locally.
Selvagees, ordinary	12	To be made up locally.
Sheers, shoes of sorts	3	To be made up locally.
Slings, gun (of sorts) white rope	8	To be made up locally.
Thimbles, sheers	4	To be made up locally.
Timber, spars for sheers and derrick. { 17-ft. 6-in. × 6-in. dia.	2	
Timber, spars for sheers and derrick. { 12 ,, 6 ,, × 4 ,, ,,	1	
Timber, spars for sheers and derrick. { 7 ,, 6 ,, × 2½ ,, ,,	1	
Hambro' line ... ... skein	1	
SPECIMENS.		
Cordage, hawser, 3-strand-pieces, 3 ft. long { white { 12-inch ...	1	To be provided locally.
Cordage, hawser, 3-strand-pieces, 3 ft. long { white { 9 ,, ...	1	To be provided locally.
Cordage, hawser, 3-strand-pieces, 3 ft. long { white { 7½ ,, ...	1	To be provided locally.
Cordage, hawser, 3-strand-pieces, 3 ft. long { white { 7 ,, ...	1	To be provided locally.
Cordage, hawser, 3-strand-pieces, 3 ft. long { tarred { 9 ,, ...	1	To be provided locally.
Cordage, hawser, 3-strand-pieces, 3 ft. long { tarred { 7½ ,, ...	1	To be provided locally.
Cordage, hawser, 3-strand-pieces, 3 ft. long { tarred { 7 ,, ...	1	To be provided locally.

N.B.—A few addilional Drill Stores have been specially allowed to Gibraltar.

Digitized by Google

(c.) Stores for Laboratory Instruction.

TABLE 0c.	Proportions.	Remarks.
Vocabulary Section III.		
Brushes, paint, sash tool, No. 4	1 per set	For marking shells.
Needles, magazine, phosphor-bronze, 4-in.	10 per set.	
Scissors, magazine	1 per set.	
Vocabulary Section IV.		
Braid, silk or worsted	As required for making up cartridges.	
Paint, red, Venetian, prepared	1 lb. per set	For marking shells.
Silk, twist	As required for making up cartridges.	
Worsted, white, No. 14... ...		
Vocabulary Section V. (1).		
Beans, black	2 sacks (6 bushels) per set.	To represent R.L.G. powder.
Cubes, wood	Sufficient to fill the 20 cartridges, and 25 per cent. spare.	To represent P. powder.
Lithographs, coloured, small, R.L. (of all fuzes, both sections and complete as mentioned below)		
Plates, stencil	1 per set....	For marking shells.
Prisms, wood	500; 10 per cent. to be black.	To represent Prism powder.
Seed, rape	¼ bushel per set. ...	To represent F.G. powder.
Vocabulary Section V. (2).		
Apparatus, filling, cartridge, B.L. 9·2-inch, 42½-lb.	1 per set.	
Bags blowing charges common	6 per set.	
Bags blowing charges mortar 13-in. ...		
Bags burster	10 per common shell ...	According to calibre of shell supplied.
Bags powder barrel, waterproof...	2 per set.	
Bags primer, filled, 7 drams ...	10 per common shell.	
Barrels, powder, whole ...	2 per set.	
Bearers, cartridge cylinder ...	1 per set.	
Boxes, section of fuzes		
Cartridges B.L., empty, 9·2-in., 42½-lb.	20 per set ...	Or such available cartridges as can be readily procured of, approximately, the calibre given. The bags should be used over and over again till worn out, the chokes and ends of braid not being cut off.
Cartridges R.B.L., empty, 40-pr., 5 lb.		
Cartridges R.M.L., empty 9-in., 50 lb. ...		
Cartridges R.M.L., empty 64-pr., 8¼ lb. ...		

Digitized by Google

(*c.*) **Stores for Laboratory Instruction**—*continued.*

TABLE 9c—*continued.*	Proportions.	Remarks.
Cases, powder { metal-lined, whole Keys	1 per set.	
Cylinders { cartridge { B.L. 9·2-in. ... R.M.L. 9-in. ...	2 per set ...	Or according to nature of cartridges available.
paper, R.B.L 40-pr....	20 per set.	
Funnels, cartridge	1 per set.	
Fuzes,* percussion { base. Armstrong ... B.L., plain, No. 2 ... direct-action, No. 3, II ,, 3, III delay, No, 10, Pettman { G.S., No. 5 land ,, 6 R.L., No. 7		
Fuzes* time { Armstrong E, No. 22. common, No. 32 ... diaphram shrapnel, No. 33. mortar, large, No. 35 ...	Head-Quarter Stations of Artillery Districts, 1 set for every two batteries. Out-stations, 1 set.	
15-secs. M.L. { No. 41 ... ... special priming, No. 42. with detonator, No. 43, III.		
time, sensitive, middle, No. 24		
time and percussion, short, No. 55.		
Fuzes, section (of all the fuzes mentioned above).		
Fuzes, time, wood (complete, unserviceable).	50 annually to each company for instruction in boring.	
Implements, fuze and shell { Drifts, G.S. ... ... Drivers, screw, Shrapnel, large. Funnels, shell, copper, small.	1 per set.	
Keys { fuze, and plug, G.S. fuze, universal		
Mallets, common ...	2 per set.	
Pincers, Shrapnel primer.		
Rods, filling { large small	1 per set.	
Scrapers, shell { 12·5-in. 9-in. ... 64-pr. ...		
Ladles, luting		

* The designation number is shown on the label of the cylinder or other package in which the fuze is packed. The number stamped on the fuze itself denotes the number of the thousand manufactured.

Digitized by Google

(*c*) **Stores for Laboratory Instruction** *–continued.*

TABLE 9c—*continued.*	Proportions.	Remarks.
Lubricators, service, 40-pr., R.B.L.	1 per cartridge.	
Luting	As required.	
Pots, melting luting	1 per set.	
Primers, Shrapnel shell ...	10 per set.	
Scoops, powder	1 per set.	
Shells { B.L., empty, common / R.M.L., empty, common / empty, Shrapnel ...	2 per set ...	For each nature of gun from which drill is carried on.
Sockets, cartridge	20 per set.	
Tubes, vent-sealing, sections { electric P. ... / percussion ...	2 per set.	
Wads, fuze-hole, G.S.	10 per common shell.	

Digitized by Google

(*d.*) **Stores for General Instruction.**

(*Depôts only.*)

TABLE 9d.

	Proportion for instruction in												Total.	Remarks.
	Gunnery.	Ammunition.	Gun drill.	Materials and appliances.	Elementary.	Machines. Gyn.	Crab capstan.	Sling wagon.	Sling cart.	Platform wagon.	Mounting and dismounting ordnance			
Vocabulary Section II. (1).														
Tent mallets	...	...	...	2	...	...	...	...	...	...	...		4	
Vocabulary Section II. (2).														
Carts, sling	...	...	...	...	...	...	...	...	1	...	...		1	
Limbers, sling wagon, 6 tons	...	...	...	...	...	...	...	1	...	...	...		1	
Wagons, sling, 6 tons	...	...	...	...	...	...	...	1	...	...	...		1	
Vocabulary Section III.														
Adzes, coopers, magazine	...	1	...	...	...	1	...	...	...	...	...		1	
Axes, pick { Heads, 6¼ lbs.	...	...	...	...	...	1	...	...	...	...	...		1	
Axes, pick { Helves, 34½ inches ...	...	...	...	...	...	1	...	...	...	...	...		1	
Brushes, paint, sash tool, No. 6 ...	...	1	...	...	...	...	...	...	...	...	...		1	
Drivers, coopers, socket, metal ...	...	1	...	...	...	1	...	1	1	...	...		1	
Hammers, claw, 28 oz.	...	...	2	...	...	...	...	...	...	...	...		6	
Needles, magazine, nickel silver, 4-in. ...	...	12	...	...	...	...	...	...	...	...	...		12	
Scissors, magazine	... pairs	4	...	...	...	...	...	...	...	...	...		4	
Shovels, universal	...	...	...	...	...	1	...	...	...	...	...		1	
Spikes, marline, iron	...	...	...	12	...	...	...	...	...	...	...		12	

Digitized by Google

Vocabulary Section IV.

Blocks, wood	double, Bothway, 12-inch (in parts)	...	...	...	...	1*	...	...	...	...	...	...	...	1		
	snatch, 15-in.	...	...	...	...	1	...	...	...	...	...	...	...	1		
Brushes, water, carriage	...	2	2	...	...	...	...	...	...	...	...	1	5		
Chalk, white ... ... boxes	1	...	...	...	...	...	...	...	...	...	...	...	1		
Charcoal (specimen in bottle)	...	1	...	...	...	...	...	...	...	...	...	...	1		
Cordage, tarred	$2\frac{1}{2}$-in. (part worn) coils 113 fms.	...	...	...	1	...	...	...	...	...	...	...	1		
	spun yarn, hemp, 2 *or* 3 thread ... lbs.	...	...	...	5	...	...	...	...	...	...	...	5		
Grease. Field's ... ... kegs	...	...	...	1	...	...	...	...	...	...	...	1		
Models, Boards, knots	...	...	...	1*	...	...	...	...	...	...	...	1		
Paint, ground, red, Chinese ... ... lbs.	...	1	...	...	...	...	...	...	...	...	...	1		
Saltpetre (specimen in bottle)	...	1	...	...	...	...	...	...	...	...	...	1		
Silk, twist ... ... lbs.	...	$\frac{1}{2}$	...	...	...	...	...	...	...	...	...	$\frac{1}{2}$		
Sulphur (specimen in bottle)	...	1	...	...	...	...	...	...	...	...	...	1		
Twine, whipping ... ... lbs.	...	...	...	1	...	...	...	...	...	...	...	1		

Vocabulary Section V. (1).

Beans, black	...	A	...	...	...	...	...	...	...	...	...	...	A	Sufficient to fill two 64-pr. cartridges.
Blocks, dismounting, siege	...	...	...	...	2	...	...	...	...	...	...	2	
Boxes, grease	3 lb.	...	...	...	...	...	1	...	...	...	...	...	...	1	
	1 ,, ...	...	1	...	...	...	...	...	...	...	...	...	1	
Brushes, piasaba, R.M.L., 80-pr.	...	...	2	...	...	...	...	...	...	...	...	...	2	
Buckets, sponge, garrison	...	...	2	...	...	...	...	...	...	...	...	1	3	
Caps, sponge, No. 8	...	...	2	...	...	...	...	...	...	...	...	...	2	
Capstans, crab	...	...	...	...	...	...	...	1	...	...	...	...	1	For general use.
Carriages, garrison, R.M.L., 64-pr., 58 cwt., common, wood	...	...	...	...	...	...	...	...	...	...	...	...	4	
Cases, cartridge, No. 4	...	...	4	...	...	...	...	...	...	...	...	...	4	
Extractors, projectile, R.M.L., 64-pr.	...	...	2	...	...	...	...	...	...	...	...	...	2	
Gaskets, crab capstan	...	...	...	1*	...	...	1	...	...	...	...	...	2	
Gyns, triangle	with appurtenances, light, tubular ...	...	...	...	...	...	...	1	...	...	...	...	...	1	
	light, Tackles	...	...	...	...	1*	...	...	...	...	...	...	...	1	
	16 ft., Slings	...	...	...	...	1*	...	...	1	...	...	...	...	2	
Handspikes, common	7-ft.	...	...	...	...	12	..	...	...	...	...	...	4	16	
	6 ,, ...	...	...	10	...	16	...	...	4	4	...	16	50	
Lanyards, friction tube, garrison, Mark III.	...	...	6	...	...	...	...	...	...	...	...	...	6	
Lashings	tarred, $2\frac{1}{2}$-in., 6 fms.	...	...	...	...	...	...	...	...	1	...	...	...	1	
	white, $1\frac{1}{4}$-in., 3 ,, ...	...	...	...	50	16	...	4	...	...	...	8	78	

* To be hung up on the walls of the lecture room.

Digitized by Google

(*d*) Stores for General Instruction—*continued.*

TABLE 94—*continued.*

| | | Proportion for instruction in | | |

| | | |

(d.) **Stores for General Instruction**—*continued.*

TABLE 9d—*continued.*

	Proportion for instruction in												Total.	Remarks.
	Gunnery.	Ammunition.	Gun drill.	Materials and appliances.	Elementary.	Machines. Gyn.	Crab capstan.	Sling wagon.	Sling cart.	Platform wagon.	Mounting and dismounting ordnance.			
Tampions, R.M.L., 80 pr. (for 64 pr.)	...	...	2	...	...	...	...	...	...	...	...		2	
Vent servers	...	...	4	...	...	...	...	...	...	...	...		4	
Wadhooks, R.M.L., 7 inch, 6½ tons	...	...	2	...	...	...	...	...	...	...	...		2	
Wagons, platform gun, R.M.L. 6·6 inch (for 64 pr.)	...	...	...	...	...	...	...	...	...	1	...		1	
Wrenches, sight, R.M.L., muzzle, frog back	...	...	2	...	...	...	...	...	...	...	...		2	
Vocabulary Section V. (2).														
Bags { blowing charges, common	...	...	...	2	...	...	...	...	...	...	...		2	
Bags { powder barrel, waterproof	...	...	...	1	...	...	...	...	...	...	...		1	
Barrels, powder, whole*	...	...	...	1	...	...	...	...	...	...	...		1	
Boxes, tube, garrison	...	...	...	2	...	...	...	...	...	...	...		2	
Cartridges { drill, R.M.L., 64-pr., 8 lb.	...	...	...	4	...	...	...	...	...	...	...		4	
Cartridges { R.M.L., empty, silk cloth, 64-pr., 8½ lb.	...	...	...	2	...	...	...	...	...	...	...		2	
Cases { powder, metal lined, whole*	...	...	...	1	...	...	...	...	...	...	...		1	
Cases { ,, Keys	...	...	...	1	...	...	...	...	...	...	...		1	
Funnels, cartridge	...	...	...	2	...	...	...	...	...	...	...		2	
Fuzes { breechloading, plain, No. 2	...	...	...	1	...	...	...	...	...	...	...		1	
Fuzes { direct action, No. 3	...	...	...	1	...	...	...	...	...	...	...		1	
Fuzes { percussion { Pettman { G.S., No. 5	...	...	...	1	...	...	...	...	...	...	...		1	
Fuzes { percussion { Pettman { land, No. 6	...	...	...	1	...	...	...	...	...	...	...		1	
Fuzes { percussion { small, No. 8	...	...	...	1	...	...	...	...	...	...	...		1	
Fuzes { time { 30 seconds, M.L., No. 40	...	...	...	1	...	...	...	...	...	...	...		1	
Fuzes { time { 15 seconds, M.L., No. 41	...	...	...	1	...	...	...	...	...	...	...		1	Annual allowance for instruction in boring.
Fuzes { time { 15 seconds, with detonator, No. 43**	...	...	...	1	...	...	...	...	...	...	...		1	
Fuzes { time { wood (unserviceable)	...	...	...	100	...	...	...	...	...	...	...		100	
Fuzes { time and percussion, middle, No. 54	...	...	...	1	...	...	...	...	...	...	...		1	

Digitized by Google

| | | |

(*d.*) **Stores for General Instruction**—*continued.*

TABLE 9d—*continued.*

	Proportion for instruction in												Total.	Remarks.
	Gunnery.	Ammunition.	Gun drill.	Materials and appliances.	Elementary.	Machines. Gyn.	Crab capstan.	Sling wagon.	Sling cart.	Platform wagon.	Mounting and dismounting Ordnance.			
Scales, weighing, powder, 8 lbs.	...	1	...	...	...	...	...	...	...	...	...		1	
Scoops, powder, 8½ inches	...	1	...	...	...	...	...	...	...	...	...		1	
Shells, R.M.L., empty* common, 64-pr.	...	2	4	...	...	...	...	...	...	...	...		6	
Shells, R.M.L., empty* Shrapnel, 64-pr.	...	2	...	...	...	...	...	...	...	...	...		2	
Shells, empty, section, R.M.L., 64-pr. common	...	1	...	...	...	...	...	...	...	...	...		1	
Shells, empty, section, R.M.L., 64-pr. Shrapnel	...	1	...	...	...	...	...	...	...	...	...		1	
Tubes, friction copper, solid drawn	...	25	...	...	...	...	...	...	...	...	...		25	
Tubes, friction drill	...	...	4	...	...	...	...	...	...	...	...		4	
Wadmiltilts, large	...	1	...	...	...	...	...	...	...	...	...		1	
Wads, fuze hole, G.S.	...	6	...	...	...	...	...	...	...	...	...		6	
Vocabulary Section VI.														
Boards, black, school	1	...	...	...	...	...	...	...	...	...	...		1	
Check, cotton ... yards	2	...	...	...	...	...	...	...	...	...	...		2	1 yard per duster.
Compasses, chalk	1	...	...	...	...	...	...	...	...	...	...		1	
Easels, school	1	...	...	...	...	...	...	...	...	...	...		1	
Pointers, 6 ft.	1	...	...	...	...	...	...	...	...	...	...		1	
Weights brass 8 oz.	...	1	...	...	...	...	...	...	...	...	...		1	
Weights brass 4 ,,	...	1	...	...	...	...	...	...	...	...	...		1	
Weights brass 2 ,,	...	1	...	...	...	...	...	...	...	...	...		1	
Weights brass 1 ,,	...	1	...	...	...	...	...	...	...	...	...		1	
Weights gunmetal 7 lb.	...	1	...	...	...	...	...	...	...	...	...		1	
Weights gunmetal 4 ,,	...	1	...	...	...	...	...	...	...	...	...		1	
Weights gunmetal 2 ,,	...	1	...	...	...	...	...	...	...	...	...		1	
Weights gunmetal 1 ,,	...	1	...	...	...	...	...	...	...	...	...		1	
Vocabulary Section VII. (1).														
T-squares, 36 inch	1	...	...	...	...	...	...	...	...	...	...		1	

* Unserviceable articles, if complete, and sufficiently good for instructional purposes, will be supplied.

Digitized by Google

TABLE 10. Army Books and Forms for Equipment.

Army No.	Subject.	Description.
Books.		
241	Equipment	Account Ledger, Depôt Company.
242		Account Ledger, Service Company.
192		Temporary receipt and issue vouchers.
243	Regimental repairs	Demand book.
244		Daily work book.
Forms.		
G 820	Arms	Requisition.
G 830		Receipt and issue voucher.
O 1600		Quarterly statement.
G 829	Materials for repairing Arms	Requisition.
G 828		Receipt and issue voucher.
G 825	,, ,, browning ,,	Requisition.
G 822		Receipt and issue voucher.
G 809	Ammunition	Receipt and issue voucher.
G 808	,, gun, for recruits	
G 805	,, ,, and rocket for practice.	
G 804	Ammunition, blank for reviews	Requisition.
G 815	,, small-arm, practice and exercise.	
G 814	Ammunition, small-arm, for recruits.	
G 952	Accoutrements...	Requisition.
G 951		Receipt and issue voucher.
G 957	Materials for repairing accoutrements.	Requisition.
G 956		Receipt and issue voucher.
G 1041	Signalling Implements and Musical Instruments.	Requisition.
G 1040		Receipt and issue voucher.
L 1377	School books and materials...	Requisition.
O 1756	Industrial School materials...	
G 997	Equipment in general, *blank*	Requisition.
G 1033		Receipt and issue voucher.
G 1049		Expenditure, transfer and conversion voucher.
P 1925		Expense voucher.
G 1027	Materials for repair in general ...	Requisition.
G 980	Stores ... ... ,, ...	Carrier's Note.
F 754		Convoy Note.
G 888		Requisition.
G 968	Camp Equipment	Requisition.
G 971		Receipt and issue voucher.
G 973	... ...	Account (*temporary use*).
B 80	Practice	Annual Report.
B 79		Company ,,
B 93		Range ,,
B 269	,, (Station)	Annual ,,

Digitized by Google

Digitized by Google

4.—ROYAL ARTILLERY REGIMENTAL DISTRICT STAFF, DISTRICT ESTABLISHMENTS, SCHOOL OF GUNNERY, R.A. STAFF CLERKS, R.A. BAND, ROYAL MALTA ARTILLERY, AND ASIATIC ARTILLERY.

CONTENTS.

	PAGE
Establishments	1048
Arms	1048
Materials for Repair, Browning, and Cleaning of Arms	1049
Ammunition	1049
Accoutrements	1049
Articles for Repair of Accoutrements	1050
Musical Instruments	1050
Saddlery, Universal	1051
Stable Necessaries	1051
Materials for Repair of Saddlery	1052
Signalling Equipment	1053
Tools, Opening Packages	1053
Miscellaneous Stores	1053
Veterinary Stores	1054
Army Books and Forms for Equipment	1054

Digitized by Google

Establishments.

The Establishments are published from time to time in Army Orders; and, being subject to change, they are not inserted in these Tables.

TABLE 1.	Proportions.
HORSES.	
Band Master	1
Mounted Band	42 Aldershot and Woolwich.
SADDLERY.	
Universal, sets	43

Arms.

TABLE 2.	Proportions.
Vocabulary Section I. (1).	*District Staff, School of Gunnery, Royal Malta Artillery and Asiatic Artillery.*
MARTINI-HENRY.	
Carbines, Artillery	All ranks except buglers and trumpeters, and those receiving staff serjeants swords.
Implements, action	1 per R.A. District for District Staffs, company of Royal Malta Artillery, Asiatic Artillery and School of Gunnery.
Jags	1 per carbine.
Protectors, front sight, carbine ...	
Reflectors*	1 per 20 or less serviceable carbines.
Sword-bayonets, Martini-Henry carbine	All ranks except those receiving staff serjeants swords.
Scabbards, sword-bayonet, Martini-Henry carbine	
	Regimental District Staff.
Sword-bayonets, Martini-Henry carbine	All ranks except band, and those receiving cavalry and staff serjeants swords.
Scabbards — sword-bayonet Martini-Henry carbine	
Scabbards — sword — cavalry patt. '85	1 per cavalry sword.
Scabbards — sword — drummers	1 per drummers sword.
Scabbards — sword — staff serjeants, iron hilt ...	1 per staff serjeants sword.
Swords — cavalry patt. '85	1 per farrier, wheeler, and collarmaker, quartermaster serjeant, shoeing smith and serjeant of mounted band.
Swords — drummers	1 per serjeant, corporal, and musician, dismounted band.
Swords — staff serjeants, iron hilt	1 per warrant officer, master gunner, staff serjeant, range serjeant, laboratory serjeant, serjeant photographer, staff clerk, and serjeant cook.

* For examining interior of barrels.

Digitized by Google

Materials for Repair, Browning and Cleaning of Arms.

As detailed in Section XII., Part 2.

The Arms of the District Staffs and School of Gunnery are repaired and browned under paragraph 340, Part 1, of these Regulations. Those of the Royal Malta Artillery, in the same manner as for Garrison Artillery.

Ammunition.

TABLE 8.	Proportions.
Gun ammunition	District Staffs. *See* para. 143. Royal Malta Artillery and Asiatic Artillery. As for Garrison Artillery.
Cartridges, small-arm — ball, M.-H. — carbine — Service ...	20 rounds per carbine.
ball, M.-H. — carbine — Practice	As for Garrison Artillery (para. 146, Part 1), except School of Gunnery, which requires none.
blank, M.-H.	

Accoutrements.

TABLE 4.	Proportions.
Vocabulary Section I. (2).	
Belts — pouch, buff — general service*	1 per rank receiving staff serjeants swords.
pouch, buff — K. E., Artillery	1 per serjeant, corporal and musician, mounted band.
shoulder, brown, sword	1 per drummers sword.
waist, buff — cavalry, patt. '85, O.R. ...	1 per cavalry sword, and corporal and musician, mounted band.
waist, buff — V.E. — patt. '82, G.S. ...	1 per company staff serjeant, serjeant, havildar, and rank and file.
V.E. — O.P.	1 per bugler and trumpeter.
warrant officers, Artillery*	1 per rank receiving staff serjeants swords.
Bottles, water, enamelled	All ranks except for regimental district staff.
Braces, buff, V.E., patt. '82 — staff — left	1 per valise, bugler and trumpeter.
staff — right	
serjeants and rank and file — left ...	1 per valise, except bugler and trumpeter.
serjeants and rank and file — right	
Chapes, waist belt, patt. '82	2 per bugler and trumpeter.
Frogs — black, R. A. band	1 per drummers sword.
buff, sword bayonet, Artillery ...	1 per sword bayonet.

* White enamelled belts will continue in use until stock is issued and worn out.

Digitized by Google

Accoutrements—*continued.*

TABLE 4—*continued.*	Proportions.
Knots, sword, buff { cavalry, line, O. R. ... / G. S.	1 per cavalry sword. 1 per staff serjeants sword.
Pouches { writing materials, Artillery ...	1 per rank receiving staff serjeants swords.
Pouches { ammunition, buff, V.E., patt. '82	2 per serjeant, havildar, and rank and file.
Slings, carbine, buff, Artillery	1 per carbine.
Straps, buff { V.E., patt. '82 { great coat and mess tin / supporting and mess tin	2 per valise, and 1 per rank receiving staff serjeants swords.
Straps, buff { water bottle	1 per water bottle.
Valises, patt. '82, japanned	All ranks except those receiving cavalry and staff serjeants swords.

N.B.—The portion of the R. A. band at Woolwich which performs mounted duties is provided with a mounted set of accoutrements in addition to the dismounted set.

Articles for Repair of Accoutrements.

Supplied as for Garrison Artillery so far as actually required.

Musical Instruments.

TABLE 5.	Proportions.
Vocabulary Section I. (3).	
Bugles ... **Trumpets**	1 per bugler, Asiatic Artillery, and trumpeter, Royal Malta Artillery; and 5 for School of Gunnery.
Strings, bugle, Royal	1 per bugle and 1 per trumpet.

Digitized by Google

Saddlery, Universal.

TABLE 6.	No.	
Vocabulary Section II. (3).		
HARNESS AND SADDLERY.		
Bits bridoon	46	1 per set saddlery and 3 spare.
Bits ,, Hooks	5	Spare.
Bits portmouth saddlery, with bridle head and reins	43	
Bits portmouth Chains, curb	5	Spare.
Bits portmouth Hooks, curb	5	Spare.
Breastpieces	43	
Cases, horseshoe, saddlery	86	
Chains, collar	43	
Collars, head	43	
Cruppers, saddlery	43	
Girths, leather	43	
Irons, stirrup, G.S.	86	
Leathers, stirrup	86	
Logs, horse	43	
Numnahs, felt	43	
Pannels, "iron arch" *or* "wood arch," saddles, universal ... pairs	43	
Reins, bridoon	43	
Saddles, "iron arch" *or* "wood arch," universal	43	
Skins, sheep, saddlery	43	
Straps shoe case	86	
Straps cloak and wallet	86	
Straps cloak centre	43	
Straps girth	86	
Straps supporting front	86	
Straps supporting rear	43	
Straps trace	86	
Surcingles, leather, harness	43	
Traces, saddlery	86	
Tugs, trace	86	
Wallets, "iron arch" *or* "wood arch," saddles, universal ... pairs	43	

Stable Necessaries.

TABLE 7.	Proportions.
Vocabulary Section II. (3).	
HARNESS AND SADDLERY.	
Bags corn, 2 bushels	1 per horse.
Bags nose, G.S.	1 per horse.
Brushes harness, hard	½ per pair of horses.
Brushes horse	1 per horse. Supplied yearly on 1st April.
Combs, curry	·1 per mounted kit.
Pickers, hoof	·1 per horse. Supplied yearly on 1st April.
Sponges, G.S.	
Vocabulary Section III.	
Scissors, trimming ... pairs	1 per horse every 5 years.

Digitized by Google

Materials for Repair of Saddlery.

TABLE 8.	Annual supply.	Remarks.
Vocabulary Section II. (3).		
HARNESS AND SADDLERY.		
Bosses bit	3	
Bosses breastplate	3	
Buckles brass, roller, single, 1-inch*	4	
Buckles iron, roller, barred, 1½-inch, head collar	4	
Buckles iron, roller, barred, 1¼-inch, stirrup leather	4	
Buckles iron, roller, barred, 1 „	4	
Buckles iron, roller, barred, ⅞ „	12	
Buckles iron, roller, single 1¼-inch	4	
Buckles iron, tinned, roller, 1¾-inch	2	
Buckles iron, tinned, roller, ⅝-inch	2	
Buckles iron, tinned, inlet, 1⅛-inch	2	
Buckles iron, tinned, inlet, ¾-inch	9	
Burrs, copper	18	
Chapes, nosebag, leather	7	
Eyelets, nosebag	7	
Rings, iron, 1¾-inch, slight	2	
Rings, iron, 1 „	8	
Saddle-trees Burrs, iron galvanised	18	
Saddle-trees Flaps, universal	2 pairs	
Saddle-trees Rivets, long	12	
Saddle-trees copper, short	18	
Saddle-trees Seats, iron arch, universal	3	
Saddle-trees Thongs, lacing, universal	10	
Squares, iron	5	
Straps, nosebag, leather	7	
Studs, wallet	12	
Vocabulary Section IV.		
Basils, brown, strained	2¼	
Felt, brown, 43 in. wide†	1¼ yds.	
Flour	¾ lbs.	
Hair, horse, saddlery	14 „	
Hides, brown, backs, bridle (Average weight. 16 lbs.)	½	
Hides, brown, backs, collar (22 „)	1	
Hides, brown, cloak (12 to 15 „)	¼	
Hides, brown, shoulders (6 „)	½	
Linen, unbleached (for repair of nosebags and corn bags)	9½ lbs.	
Nails, steel, tacks, Flemish, black, No. 192	1¼ „	
Oil, rape	14 pints	
Serge, collarmakers	7½ yds.	
Soap, soft‡	387 lbs.	
Thread, black, 3-cord	0 8 lbs. ozs.	
Thread, flax, fine	2 0 „	
Thread, whited-brown	0 8 „	
Twine, quilting	1 0 „	

* For iron arch saddles.
† Either felt or numnah cuttings will be supplied. The supply is alternative.
‡ Either ¾-lb. of soft soap, or ½-lb. yellow soap monthly per set of saddlery.

Digitized by Google

Materials for Repair of Saddlery—*continued.*

TABLE 8—*continued.*		Annual supply.	Remarks.
Wax	bees ... ... lbs. ozs.	0 4	
	black ... ... „	1 0	
Web	diaper, 2-inch ... ... yds.	6	
	straining ... ... „	3	
	MISCELLANEOUS STORES.		
Numnah cuttings*			
	Vocabulary Section VI.		
Dubbing ... ... lbs.		28	
Ink, marking... ... ... pints		1	

* Either felt or numnah cuttings will be supplied. The supply is alternative.

Signalling Equipment.

(For Royal Malta Artillery only.)

Supplied as for Garrison Artillery.

Tools, Opening Packages.

TABLE 9.	Proportions.
Vocabulary Section III.	
Chisels, ripping	1 per R.A. District for District Staffs, and 1 per company of local Artillery (Hong Kong and Mauritius per 2 companies). For opening packages.
Drivers, screw, general service, 9-inch	
Hammers, riveting, 24-oz.	
Knives, laboratory	

Stores for Marking and Handcuffs.

TABLE 10.	Proportions.
Vocabulary Section IV.	
Brushes, stencil	2 per R.A. District for District Staffs, and 2 per company of local Artillery (Hong Kong and Mauritius per 2 companies). Marking valises.
Plates, stencil, paper	4 per R.A. District for District Staffs, and 4 per company of local Artillery (Hong Kong and Mauritius per 2 companies). 2 for marking back and 2 for front of valises.
Vocabulary Section VI.	
Handcuffs, common ... ... pairs	1 per company of local Artillery (Hong Kong and Mauritius per 2 companies).
Stamps	As for Garrison Artillery as far as applicable.

Digitized by Google

Veterinary Stores.

(*Referred to in Paragraph* 255, *Part* 1.)

TABLE II.	Six Months Supply.
Vocabulary Section II. (1.)	
Blankets, horse, brown	2
Pads, surcingle...	2 } Not required for Mark II. horse
Surcingles, web, cavalry	2 } blanket.

Army Books and Forms for Equipment.

Supplied as for Garrison Artillery.

Digitized by Google

INDEX TO SECTION XII.

GARRISON ARTILLERY.

—	Para.	Page.
A.		
Accoutrements		1025, 1049, 1050
articles for repair of		1026
Accounts, store—		
accountant	221	
agreement with actual receipts and issues	240	
balancing and transmission of	228	
certificate as to consumable articles	235	
charge of	229	
drill and instruction, stores for	232	
expendible stores not taken on charge in	227	
experimental purposes, stores for....	234	
forms for	222	
fuze hole plugs	226	
gas checks	224, 225	
gunpowder, half yearly returns	240A	
head-quarters' staff and staff clerks' equipment....	4	
Inspectors of Warlike Stores, articles held by	9	
instructions for keeping ledgers, applicable to	220	
materials for repairs or preservation	227	
models, &c., for instruction not shown in	228	
officer commanding artillery district, duties	3	
Ordnance Store Department, with	230, 231	
scope of	223	
special for certain stations....	237–239	
transfer of charge	233	
vocabulary of stores, agreement with	240	
vouchers, disposal of	229	
,, transfer and conversion....	236	
Ammunition, gun—		
armaments, cartridges and shells kept filled	71	
,, machine guns....	69	808
,, mortars	73, 74	

Digitized by Google

—	Para.	Page.
Ammunition—*cont.*		
armaments, proportions	69	
,, ,, magazines near buildings	72	
,, quick-firing guns	69	804
,, report of insufficient accommodation	75	
,, S.B. ordnance	73, 74	
artillery provided in estimates	36	
movable armaments	69, 107	
position batteries	69, 106	
,, ,, volunteer	70	
practice, bags for bursters, dispcsal of	163	
,, blank	169, 170	
,, cartridge covers	163	
,, classification	115	
,, company, colonial artillery, native	144	
,, ,, commutation of	146	
,, ,, competitive practice	141, 148	
,, ,, elementary instruction	141, 142	
,, ,, guns, natures of, used	145	
,, ,, inadmissible with siege or camp of instruction	148	
,, ,, projectiles used	145, 147	
,, ,, reports on result	149	
,, demands for	160	
,, District Staff, R.A. District	143	
,, fuzes for mortar shells	159	
,, making up	165, 166	
,, oldest used first	161	
,, position finding	150–152	
,, regimental, mountings, examination after	138	
,, ,, object of	133	
,, ,, ordnance, natures of, used for	133	
,, ,, projectiles, natures of, used	134–136	
,, ,, proportions	129, 132	
,, ,, ,, colonial artillery, native	131	
,, ,, ,, lighter ordnance	130	
,, ,, ,, West India regiment	131	
,, ,, reports on results	137	
,, shells, filled with coal dust, dry	158	
,, ,, ,, water	155–157	
,, ,, where filled and by whom	161, 168	
,, siege	139, 140	
,, spare tubes and primers....	162	
,, station, annual practice for half the works	124	

Digitized by Google

Index.

	Para.	Page.
Ammunition—*cont.*		
practice, station, blank for	121, 122	
,, ,, exemption from	118	
,, ,, grouping of guns	123-125	
,, ,, mountings, examination after firing	128	
,, ,, period for firing	116, 117, 119, 123	
,, ,, projectiles to be used	120	
,, ,, proportions	116, 117, 119	
,, ,, report of result	127	
,, ,, targets, mode of using	126	
,, transfer from laboratory to batteries, &c.	167	
Ammunition, small arm		1025, 1049
quarantine	169	
salutes and signal guns	169	
Arcs—		
graduated, charge of and accounting for	97	
,, demands for	95	
,, elevating, mode of mounting....	387, 388	
,, ,, adjustment of	465	
,, ,, H.P. mountings	496-498	
,, graduations, numbering of	99	
,, ,, refilling	377	
,, tables of	98	693
Armaments—		
ammunition for	69	
changes by G.O.C.	49	
inspection, record of joint, of R.A. and R.E.	53-55	
new, testing	52-53A	
proposals for new or alterations	2A	
return, joint, of artillery and engineers	56-58	
Secretary of State fixes	49	
Arms		1024, 1048
materials for repair, browning, cleaning		1024, 1049
Army Forms and Books—		
armaments		838
companies		1045
Artificers, ordnance. See **Ordnance Artificers.**		
Artillery, preservation of ordnance, &c.	197	

Digitized by Google

Index.

—	Para.	Page.
B.		
Bags, for bursters of shells	163	
Battery—		
grouping of batteries	64	
signification of	63	
supplies to	63	
Beds, for howitzers, and component parts	426	974-995
Boats, for towing targets, estimate of	180	
Books—		
army, list of, for armaments		838
,, ,, for companies		1045
text and hand, proportions issued	191	
Bores—		
artillery, keep in order	256	
cleaning of	297-300	
examination of, cleaning for	297-300	
,, corrosion by salt water, S.B.	319	
,, defects	312-319	
,, ,, measuring and noting	308-310	
,, ,, when taken notice of	302	
,, dents or abrasions	318	
,, impressions, label	311	
,, ,, mode of taking	303-307	
,, ,, nature of necessary	302	
,, tools for	301	
lacquering, after practice	164	
preservation of, lacquering, &c.	244, 255	622, 623
sentence on	320-325	
Breech Fittings—		
examination of, B.L. guns	335	
,, quick-firing guns....	344-345	
,, R.B.L. guns	336-342	
,, S.B.B.L. guns	346-353	
B.L. Guns—		
carriages, spare parts, &c.		862-899B
equipment, details		722-735
,, spare parts, fittings		840-851
slides, spare parts, &c.		900-917
Breech Screw—		
examination of, R.B.L. guns	336	
,, S.B.B.L. guns	346	
Browning Guns	246	
ordnance to be browned	245	
stores and ingredients for	205	624

Digitized by Google

Index.

	Para.	Page.
Buffers, Hydraulic—		
caps, wrought iron	422	
circular	421	
connection with carriages, double plate, medium	401, 402	
,, ,, ,, siege, travelling	409	
,, ,, slides	417, 423	
examination of	456	
filling, mode of	403, 418, 424	
leakage, mode of remedying	457	
maintenance of	91	
materials for packing		692
oil drippings from, not to be used	458	
preservation of R.M.L. 12-inch and H.P. mountings	429	
transport, packing for	470	
Bugles and Strings		1027, 1050
Bulkheads, removal for gun practice	153, 154	
C.		
Camp Equipment		1028
Carriages—		
brake gear, differential	445	
buffers, hydraulic. See **Buffers.**		
cleaning by ordnance artificers, periods for	459, 460	
,, monthly	432	
component parts, heavy guns	386	918-941
,, ,, medium guns	396, 406	974-995
composition of	378, 394	
compressor gear, attachment of	404	
,, ,, regulation of	450	
,, ,, rust scraped off	447	
damages, parts replaced or repairs	461	
degree scales, adjustment of	465	
double plate, heavy guns	384-386	
,, ,, medium guns	395-398	
elevating gear, heavy guns....	387-392	
,, ,, medium guns, double plate	398-400	
,, ,, ,, single plate	407	
,, ,, siege, travelling	410-412	
,, ,, tightening up	446	
examination, gear under slide	434	
,, memorandum of	379-383	
,, mountings in permanent works	464	

Digitized by Google

——	Para.	Page.
Carriages—*cont.*		
examination, period for	433	
friction gear, cleaning and oiling	444	
instructions with regard to preservation, to be hung up	466	
jacks, G.S.	455	
landing gear at sea forts		668
lever, adjusting	448–451	
lubricating	432, 433	
,, holes	452	
marking of	192	
memorandum of examination	379–383	
movable gear, cleaning of, &c.	430	
nuts, replacing	439	
paint, rubbed off	431	
painting	477–482	
,, time and working-pay for		627, 628, 636–638
,, quantities of paint required		630, 631, 643, 644
position shifted when not in use	436	
precautions before firing or drill	438	
preservation of	428	
preventor gear, replacing	449	
,, ,, rust scraped off	447	
racers, cleaning	443	
removal of gear, care to be taken	440	
repairs previous to scraping and painting	473	
reports and correspondence, marks, &c., quoted in	462	
rollers, cleaning, &c.	441, 453	
,, fitting, heavy guns	393	
,, ,, medium guns	397	
scraping	473–476	
,, time and working pay for	481	630, 631, 643, 644
screws, replacing	439	
siege, travelling	408	
single plate, medium guns	405–407	
slides. See also **Slides**	413–425	
toothed wheels	454	
transport, packing for	467–472	
trucks, packing for transport	469	
,, removal and replacing	441, 442	
Cartridges—		
armaments, when kept filled	71	
paper covers for, disposal of	163	

Digitized by Google

Index.

	Para.	Page.
Cartridges, return to store	40, 41	
Casemates, special, with turntables....	565, 566	
Chains, shell lifts, testing and preservation of	634–636	
Charge, divided between R.A. and O.S.D.	59, 61, 78	
Cleaning Ordnance, &c.—		
periods for	242	
time, working pay and materials for	206	616-626
Colonial Native Artillery—		
ammunition....	131, 144	
Compressor Gear—		
attachment to carriages, mode of	404	
,, slides, mode of	425	
regulation of	450	
rust scraped off	447	
Cups—		
obturating, examination, B.L. guns	335	
,, ,, S.B.B.L. guns....	347, 348	
Cylinders—		
fuze, tube, and primer, issued full	77	
,, ,, not opened till required	84	
,, ,, open, to be replaced	85	
D.		
Deficiencies, explanation of completion on return	51	
Demands—		
articles supplied according to batteries	63	
,, ,, in proportion to pieces....	65	
gas checks and fuze hole plugs	224, 225	
ordnance S.D., between accountants and	230, 231	
District, definition of	62	
District Staff—		
ammunition for company practice	143	
arms and accoutrements for	4A	
stores for gun drill and laboratory	112	
Drill, Stores for—		
accounting for	232	
district staff....	112	
instructors of gunnery, where appointed	111	
proportions	109	1029-1044
storage at head-quarters or out stations	113	
Detonators—		
for destroying shells	45, 46	
return to store	86	

Digitized by Google

Index.

	Para.	Page.
E.		
Engineers, officers of R.A. and R.E.—		
joint armament, return	56–58	
,, inspection, record of....	53–55	
testing new armaments	52, 53	
Estimates, preparation of	33–38	
Examination of ordnance. See **Inspection.**		
Exchange of ordnance in important positions	286	
F.		
Fittings—		
examination of, B.L.	335	
,, quick-firing, breech	344, 345	
,, R.B.L.	336–343	
,, S.B.B.L.	346–353	
preservation of	264–271	
Flag—		
red, supplies to coast batteries for practice	100	688, 689
signalling	190	
Forges, for repairing armaments	173–175	
Forms, Army—		
list of, armaments		838
,, companies		1045
Fuzes—		
charge of	78	
,, O.S.D., kept ready....	82	
,, war, in time of	83	
cylinders, not opened unless required	84	
,, open, to be replaced	85	
,, supplied full	77	
instruction, service, supplied for	114	
mortar shells, for	159	
proportions	76	
return to store	86	
spare for practice not allowed	162	
storage of	78, 79	671
supply of	77	
G.		
Gas Channels, kept clear	258	
Gas Checks—		
demands, charging and accounting for	223, 224	

Digitized by Google

Index.

	Para.	Page.
Gas Checks—*cont.*		
recovery of, rewards for	47	
storage of		671
Gauges—		
for projectiles	213–219, 626	
pressure, for indicator, H.P. mountings, Mark I.	561–564	
,, ,, ,, ,, Mark II.	564A–564D	
Grouping of forts and batteries for stores	64	
Gun Practice—		
ammunition for	115–152	
attendance of Inspector of Ordnance Machinery	23	
,, ordnance artificers at	27	
bulkheads, removal for	153, 154	
limits to rounds fired	277	
ordnance, used for, company	145	
,, ,, regimental	133	
,, ,, station	116–119	
position finding	150–152	
reports on	127, 137, 149	
siege practice	139, 140	
Gun Cotton, for destroying shells	45, 46	
Gunpowder, loose, when kept in R.A. charge	74	

H.

Handbooks, proportions issued	191	
Handcuffs		1028, 1053
Harness		1051
repair of	193	1052, 1053
Head-Quarters Staff, demands and accounting for	4	
Hoisting Gear—		
care and preservatien of		575, 577
for landing, moving and mounting heavy guns	90,	654–668
for landing heavy guns at sea forts	571–575	
for Spithead forts	576, 577	
Hoops of powder barrels, return to store	42, 43	
Howitzers—		
beds for	426	974–995
equipment details		774–786
Hydraulic Buffers. See **Buffers.**		

Digitized by Google

Index.

	Para.	Page.
Hydro-pneumatic Mountings—		
air chambers, cleaning	535	
bright parts greased	541	
cut off chain, adjustment of	493	
cylinder, air formed in, release of	500	
„ cleaning out, periods for	533	
„ cleanliness necessary	530	
„ filling, mode of	490	
„ kept filled and under working pressure	531	
„ liquid in, nature and quantity of	487, 488	
elevating arcs and pinions	496–498, 539, 540	
indicator, Mark I, attachment of	489, 556	
„ „ box and spanners	557	
„ „ composition of	555	
„ „ gauge for	561–564	
„ „ kept under pressure	559	
„ „ leather of plunger	560	
„ „ mode of use	558	
„ „ object of	554	
„ Mark II	560A–560D	
„ „ gauge for	564A–564D	
leakage, dealt with before firing	502	
„ locality and signs of	514–516	
„ lowering pump	526, 527	
„ pressure	532	
„ recoil ram gland	518–525	
„ removal of liquid to examine	517	
leather washers forming joints, position of	543–545	
leathers, preservation of	531	
„ spare	534	
liquid in cylinder, composition of	487	
„ „ extra pumped in	536	
„ „ quantity of	488	
„ „ removal to examine leak	517	
lowering gun, mode of	501	
„ „ weekly	529	
metal joints holding pressure, position of	546	
oil holes, position of	542	
packing, position and sizes of	544, 545	
„ mode of inserting	522	
pump, composition of	549	
„ disconnection of duplicate	551	
„ leakage in	526, 527	

Digitized by Google

—	Para.	Page.
Hydro-pneumatic Mountings—*cont.*		
pump, leathers, kept under pressure	553	
,, mode of charging recoil cylinder	550	
,, object of	548	
,, tanks kept full	552	
pumping, extent of, before mounting gun	494	
racers and rollers, examination and cleaning	483–485	
raising gun, mode of	499	
,, ,, weekly	529	
recoils on ram	503–505	
reports	547	
roller axles, cleaning and lubricating	538	
,, path, lower, kept clean	537	
shaft bearings, cleaning and lubricating	538	
shield, erection of	495	
training gear, taken to pieces every 6 months	539	
traversing gear, attachment and testing	486	
valves, raising, adjustment and repacking gland	512, 513	
,, recoil, adjustment of	506–511	
working pressures	491, 492	
I.		
Impressions—		
of bore, label	311	
,, mode of taking	303–307	
,, nature of necessary	302	
of vent	328	
Inspection—		
by officer commanding artillery district	1, 2	
by staff for inspection of warlike stores	8	
joint, by R.A. and R.E., record of	53–55	
Inspection of Ordnance—		
abroad	285	
accidents, immediate inquiry and report	295	
at home	280–284	
blank charges, period for ordnance firing	278	
bore, examination of. See also **Bores**	297–325	
condemnation, final	275	
,, provisional	276	
Esquimault or Simon's Town	293	
exchange of ordnance in important positions	286	
exterior	354–362	
fittings, examination of. See also **Fittings**	335–353	
Marines, Coast Guard, and Naval Reserve	288	
memorandum of examination	296	

Digitized by Google

	Para.	Page.
Inspection of Ordnance—*cont.*		
naval services on shore	288	
periods for	277, 278	
reports at home	282–284	
re-vented or repaired	294	
ships, abroad	289	
,, at home	287	
,, naval officer, by	290	
,, sentence, mode of	291	
special examination	279	
vent	326–334, 338	
Inspection of Warlike Stores, Staff for. See **Staff**	5–9	
Inspectors of Ordnance Machinery—		
abroad, assists in examination	11	
,, repairs	13	
assistance, application for	15	
charge of artificers, workmen, &c.	17	
duties generally	10, 11	
gun practice with heavy guns, attendance at	23	
inspection of gun wharfs or ordnance workshops	18	
instructions to master gunners, &c., in charge of machinery and stores	24	
instruments for inspection	24A	
journal	19, 20	
materials and tools for	16	
mountings, examination after practice	128, 138	
proofs of guns, &c., attendance at	22A	
repairs	12–14	
reports, immediate on defects	22	
,, quarterly	21	
,, repairs, of	14	
Instructional Stores—		
accounting for	228, 232	
gunnery instructors, where appointed	111	
position finding, electric	112A	
proportions	109	
stored at head-quarters or out stations	113	
J.		
Jacks, hydraulic, preservation of	455	
Jacks, lifting, G.S. Pattern—		
care of	602, 603	
filling, fluid for	599	

Digitized by Google

Index.

	Para.	Page.
Jacks, lifting, G.S. Pattern—*cont.*		
filling, mode of	600, 601	
leather packings, mode of getting at	608	
lowering	606	
parts liable to get out of order	607	
precautions observed in working	609–611	
raising up a load, instructions	605	
transport, preparation for	604	
Jacks, lifting, Tangye's Pattern—		
care of	587–589	
filling, filter used	586	
,, fluid for	585	
lowering	592, 593	
parts liable to get out of order	595–598	
pump, removal of	594	
raising a load, instructions for	591	
transport, preparation for....	590	
L.		
Laboratory—		
duties of staff for inspecting warlike stores	7	
grouping of, for supplies	64	
stores, district establishment	112	
,, stations, supplied to, and sets of stores	110	691
,, supply of, and details	77	1035–1037
Lacquering of bores after practice	164	
,, ,, lacquer for		622, 623
,, ,, tools for		616–621
,, ,, when not in use	244, 255	
Landing Gear for heavy guns—		
sea forts, &c.	571–575	653–669
Lanyard Guides	269	
Lettering of carriages....	192	
Lifting Gear at Spithead	576, 577	
Local Tradesmen, material and labour from	212	
Lubricants—		
extra for special positions....	200	
,, on first receipt from store	199	
fresh, application of	433	
holes, lubricating	452	
proportions of	195, 201	530–533
uses of	196	

Digitized by Google

——	Para.	Page.
M.		
Machine Guns—		
ammunition for armaments	69	808
equipment details		805–808
Magazines—		
charge of	59	
stores		831–837
,, spare		1021, 1022
Maintenance of armaments	48–68	
Mantlets, rope—		
bars, kept clean	583	
dry, to be kept	584A	
maintenance of	92–94	
soaking in chloride of calcium	578–582	
working of, weekly	584	
Marking carriages and wagons	192	
Memorandum of Examination—		
ordnance	296	
carriages	379–383	
Mortars, details of equipment		788–792
Mounting Guns, stores and gear for	90	657–669
Mountings—		
gun, B.L., cleaning, &c.	460	
,, ,, instructions for	427	
,, ,, oil for buffers and pumps	427A	
,, examination of, after practice	128, 138	
,, ,, before painting	243	
,, ,, periodical	459–463	
Movable Armaments—		
ammunition for	69, 107	
equipment details for		809–822
rangefinders, large for	108	
Musical Instruments		1027, 1050
Muzzles—		
depression of, when not in use	267	
stopping of	266	
N.		
Naval Services, examination of ordnance for	287–291	

Digitized by Google

Index.

—	Para.	Page.
O.		
Ordnance—		
accidents, immediate inquiry and report	295	
browning, stores for	205	
charge of	59	
demands for, authority necessary	37	
inspection of. See also **Inspection of Ordnance**	275–362	
landing, &c., gear and stores for	90	657–669
mounting and dismounting, gear and stores for....	90	
practice, used for, company	145	
,, ,, regimental	133	
,, ,, station....	116–119	
preservation of, instructions for	194, 244–271	
,, stores for....	195–201	
recruits, for dismissal of	68	
returns of, mode of filling in	363–372	
re-venting, considered serviceable after	330	
salutes, signalling, time guns, supply of	67, 68	
transport of, preparation for	272–274	
,, stores for	90	654–657
Ordnance Artificers—		
application for, and attachment to Artillery	25	
charge of	17, 32	
duties	26, 29	
examination of carriages, slides, &c.	459–463	
gun practice, attendance at	27	
inspections, accompany and assist in	28	
mountings, examination after practice	128, 138	
position finding, repairs of instruments	32A, 32B	720*a*–720*g*
report of work	32	
tools for	30, 31	
Ordnance Store Department—		
charge divided between R.A. and	59,61,78	
demands, correspondence between accountants and	230, 231	
P.		
Painting—		
carriages and slides	477–482	
,, ,, paint for		627–629 634–641
,, ,, scraping, previous to	473–476	
,, ,, time and working pay for		630–633 642–647
colouring for guns and mountings	253	

Digitized by Google

Index.

—	Para.	Page.
Painting—*cont.*		
mountings examined before	243	
ordnance, dismounting, raising, &c., for	247–249	
,, mode of	252	
,, paint for	254	622, 623
,, preservation by	244	
,, scraping and cleaning before	250	
,, time and working pay	254	625, 626
paint, descriptions of, used	204	
,, miscellaneous articles		634–641
,, supplied prepared for use	202, 203	
periods of	242	
projectiles	623–632	648–651
time and working pay for	206	
tools for	206	616–621
Pin, breeching loop block	257	
Pivots—		
care to be taken with	443A	
charge of, and accounting for	97	
demands for	95, 96	
rubbed with oiled wiper	478	
tables of plugs	98	694–699
Plates, elevating, removal for transport	268	
Plugs—		
fuze hole, demanding, accounting for	226	
pivot, tables of	98	694–699
Portland Breakwater Fort, controlling gear	574	
Position Batteries—		
ammunition for	69, 106	
details for	105	
Position Finding—		
arrangements for	88	
artificers, special for	32A	
instruments, tools, &c., for repair of 32A, 32B	175A	
instructional stores, electric	112A	
practice, ammunition for, instructions, report of	150–152	
Primers, vent piece, spare	162	
Projectiles—		
gauges for	213–219, 626	
painting	623–632	
Palliser, fractured, examination of	622	
piling	633	
scraping and examining	612–622	
storage of		670, 671
(See also **Shells.**)		

Digitized by Google

	Para.	Page.
Q.		
Quarantine, ammunition for....	169	
Quick Firing Guns—		
ammunition for	69	804
equipment, details		793-803*a*
examination of fittings	344-345	
fittings, component and spare parts		1018-1021
impressions of bore	307	
R.		
Racers—		
charge of, and accounting for	97	
cleaning	443, 478	
demands for....	95	
examination in permanent works	464	
H.P. mountings, cleaning	483-485	
tables of	98	694-699
Racks, traversing—		
charge of and accounting for	97	
demands for	95	
tables of	98	693
Range Finders—		
depression	87	672-687
field, large, for movable armaments	108	
Range Tables, proportions issued	191	
Record of Joint Inspection, officers R.A. and R.E.	53-55	
Recruits, ordnance, for dismissal of	68	
Repairs—		
charge of workmen, &c., employed on	17	
inspectors of ordnance machinery, duties	12-15	
materials, tools for....	16	
Reports—		
gun practice....	127, 137, 140, 149, 152	
inspections, special, to G.O.C.	2	
Inspector of Ordnance Machinery	20, 22	
mode and date of rendering	50	
ordnance artificers, on	32	
Requisitions—		
for equipments	39	
,, materials for repair and preservation	226	

Digitized by Google

	Para.	Page.
Responsibility of R.A. and O.S.D. for maintenance of proportions	61	
Return into Store—		
detonators, fuzes, tubes	86	
filled shells and cartridges	40, 41	
hoops of powder barrels	42, 43	
plugged shells and shot	44	
rewards for recovery of projectiles	47	
Returns—		
deficiencies, completion of noted on	51	
joint armament of R.A. and R.E.	56–88	
Instructions for rendition of	50	
mode of preparation	363–372	
Rewards for recovery of projectiles and gas checks	47	
R.B.L. Guns—		
equipment, details		766–773
fittings, component and spare parts		858–861
R.M.L. Guns—		
equipment, details		735–765
fittings, component and spare parts		852–857
Rockets, war, supply of	89	
Rope Mantlets, maintenance of	92–94, 578–584	
Rust, removal of	198A	

S.

Saddlery		1051
repair of	193	1052–1053
stores for		
Saluting—		
ammunition	169, 170	
ordnance	67–68	
,, examination of, periods for	278	
Screws—		
fixing, removed and oiled	271	
preserving, removed and oiled	270	
Shell Lifts, chains and winches, testing and preservation of	634–636	
Shells—		
armaments, when kept filled	71	
destruction by guncotton	44–46	
examination of, fuze holes	619, 621	
,, interiors	613	

Digitized by Google

Index.

	Para.	Page.
Shells—*cont.*		
examination of, lead coated	615	
,, Palliser	622	
,, rifled shrapnel	614	
,, rivet holes	620	
,, shot run for	612	
,, time and working pay for	627	
filled, return to store	40–41	
,, with dry coal dust	158	
,, ,, water	155–157	
filling of, where and by whom	161, 168	
firing, mode of	134, 147	
gauging of	213–219, 626	
lifting apparatus, testing and preservation	634–636	
marking with W	168	
Moorsom fuze hole, disposal of	616	
painting, coats of	624	
,, filling, previous to	631	
,, magnetic oxide used	623	
,, marking, for ingredients	632	
,, paint, quantity	627	648–651
,, portions painted	625	
,, red paint for shrapnel tips, ingredients	629	
,, repainting	630	
,, time and working pay for	627	
,, white paint for white bands, ingredients	628	
piling, mode of	633	
plugged, recovery after practice	44	
scraping, exteriors	617	
,, interiors	618	
storage of		670, 671
Ships, ordnance on, examination of	287–291	
Shot run, for examining, cleaning shells	612	
Siege Travelling Carriages	408–412	
Siege Artillery—		
ammunition for armaments	69	
,, ,, practice	139, 140	
charge of and accounting for	104	
details for Siege Train Companies	103	823–830
,, generally	101	
distribution of companies	102	
practice	139, 140	
Sights, preservation of	259–263	
Signalling—		
ammunition for	169, 170	

Digitized by Google

	Para.	Page.
Signalling—*cont.*		
equipment		1026, 1027
flags and poles	190	
ordnance for	67	
Slides—		
buffers, hydraulic	417, 418	
,, ,, medium guns	420–424	
cleaning, half-yearly, by ordnance artificers	459	
cleaning, monthly	432, 435	
component parts of heavy guns	415, 420	942–973
,, ,, medium guns		1008–1017
composition of	413	
compressor gear, medium guns	425	
double plate carriages	413	
gear under, examination of	434	
oiled cloth for, during practice	437	
painting	477–482	627–641
preservation....	428	
scraping	473–476, 481	
,, time and working pay for		630–633
transport, packing for	467–472	
traversing and running back gear, &c.	414, 416, 416A	
,, ,, ,, ,, medium guns	419	
(See also **Carriages**.)		
Smooth Bore, B.L. Guns—		
equipment, details		780–787
fittings, component and spare parts		858–861
,, examination of	346–353	
Spare Parts—		
charge of	61	
general lists of		839–1022*a*
Spithead, lifting gear at	576, 577	
Staff Clerks, demands and accounting for....	4	
Staff, headquarters, demands and accounting for	4	
Staff for Inspection of Warlike Stores—		
articles in charge of	9	
command of	5	
duties	6–8, 10	
examinations abroad, Inspector of Ordnance Machinery assists	11	
inspection of ordnance	283, 285	

Digitized by Google

Index.

	Para.	Page.
Stores—		
arrangement in works	60	670, 671
for landing, transporting, mounting, &c., guns	90	654–669
for drill and instruction	109–114	1029–1044
for preservation of ordnance, &c.	194–208	
Sub-districts, definition of	62A	
Supplies—		
according to number of pieces	65	
batteries, to....	63	
districts, stations, to	66	
due from O.S.D., return of	2	
grouping of forts, batteries for	64	
T.		
Targets—		
abroad, made locally	179	
accounting for	186	
anchors and cables, loss of	188	
boats for, estimate for Supply Officer	180	
floating, not left out at night	189	
instructional	181, 182	
pattern of	176, 183, 184	
proportions, companies	177	
,, reduction of	178	
,, stations	183	
provision and construction of	184	
return to store	187, 187A	
rope for towing	185	
shot away, written off charge	188	
station practice, mode of using	126	
working pay for manufacture and repair	186	
Text Books, proportions issued	191	
Time Guns, supply of ordnance for....	67	
Tools		700–720*g*
artificers of garrison companies	171	1028
charge and maintenance of	241	
Inspector of Ordnance Machinery, for	16	
intrenching		1028
opening packages		1028, 1053
ordnance artificers'....	30, 31	
examining quick-firing guns		803
repairing in districts	173–175	700–712

Digitized by Google

Index.

	Para.	Page.
Tools—*cont.*		
scraping, examining, and painting ordnance	172	616–621
venting ordnance		700–705
Transport—		
of carriages and slides, packing for	467–472	654–657
of jacks, hydraulic, preparations for	590, 604	
of ordnance, stores for	90	
,, preparations for	272–274	
Trumpets		1027, 1050
Tubes—		
charge of	78	
,, O.S.D., kept ready	82	
,, in time of war	83	
cylinders, not opened unless required	84	671
,, open to be replaced	85	
,, supplied full	77	
position finding, for	151	
proportions	76	
return to store	86	
spare friction	162	
storage of	78, 79	671
supply of	77	
Turntables—		
charge of	570	
description of	568	
points to be attended to in working	569	
positions of	567	

V.

Vents—		
axial, instructions for removing and replacing	373–376	
copper ring to be examined	340	
examination of	326–329, 338	
,, defects and sentence	331–334	
radial copper, cleaning	251	
reventing, examination after	294	
,, serviceability after	330	
,, stations, where carried out	292	
tools for venting		700–705
vent pieces, changed during practice	341	
,, drill purposes, for	343	

Digitized by Google

	Para.	Page.
Vents—*cont.*		
vent pieces, examination, &c.	338–340	
,, removal when not in use	265	
Veterinary Stores		1054
Volunteer Batteries of Position—		
ammunition for	70	
Vouchers—		
care in preparation of	240	
disposal of	229	
transfer and conversion	236	
W.		
Wagons, marking of	192	
Welds, defective on exterior of gun	356–358	
Wharf, Gun, inspection by Inspector of Ordnance Machinery	18	
Winches in shell lifts, testing and preservation of	634–636	
Working Party—		
local tradesmen employed	212	
strength of	210	
superintendence of	209, 211	
Working Pay—		
for cleaning, painting, etc., carriages and slides		630–633
,, ,, miscellaneous articles		642–647
,, ,, ordnance		625, 626
,, ,, projectiles		648–651
,, ,, pay lists	208	
,, ,, piece work, for	207	
for making up ammunition	166	
Workshops—		
available for Inspector of Ordnance Machinery	16	
for repairing armaments	173–175	
inspection by Inspector of Ordnance Machinery	18	

Digitized by Google

LONDON:
PRINTED FOR HER MAJESTY'S STATIONERY OFFICE,
BY HARRISON AND SONS,
PRINTERS IN ORDINARY TO HER MAJESTY.
(Wt 20662 2250 1 | 93—H & S 7344)

Digitized by Google

Digitized by Google

Digitized by Google

MILITARY BOOKS, published by Authority—continued.

LAW. MILITARY. Manual of. 1887. Abbreviated Edition. 8vo. 710 pp. Price 1*s.* 6*d.*

RANGE-FINDING. Field. Manual of. For Officers and Non-Commissioned Officers of the Horse and Field Royal Artillery. 1891. Price 1*s.*

BASHFORTH CHRONOGRAPH: Report on Experiments with. (1870.) Price 1*s.* Final do. (1878-80.) Price 2*s.* 3*d.*

RAILWAYS. MILITARY. Manual of. 1889. Price 2*s.*

SCHOOL OF MUSKETRY AT HYTHE: Report on the Instruction carried on at, and of the Progress of Musketry Instruction in the Army during the Year ending 31st March, 1892. Price 4*s.* Also Reports on the Years 1859 to 1890 can be had.

SMALL ARMS AND AMMUNITION. MILITARY. TREATISE ON. With Theory of the Motion of a Rifle-bullet. A Text Book for the Army. 1888. Price 4*s.* Addendum: Description of the Magazine Rifle. Price 1*d.*

ROYAL MILITARY ACADEMY, ADMISSION TO: AND FIRST APPOINTMENTS THEREFROM TO THE ROYAL REGIMENT OF ARTILLERY AND THE CORPS OF ROYAL ENGINEERS. War Office, 1891 Price 1*d*,

ROYAL MILITARY COLLEGE, ADMISSION TO: AND FIRST APPOINTMENTS THEREFROM TO THE ARMY: Regulations for. War Office, August, 1892. Issued with Army Order, 1st Feb., 1892. 8vo. Price 1*d.*

ROYAL MILITARY COLLEGE: Synopsis of Course of Instruction at. 1892. Price 6*d.*

MILITARY EXAMINATION PAPERS, viz.:—

Army Preliminary Examinations. Examination Papers, &c. September, 1892 Price 1*s.*

Royal Military Academy, Woolwich, December, 1892. Price 1*s.*

Royal Military College, Sandhurst, and Royal Marine Light Infantry, December, 1892. Price 1*s.*

Staff College. Admission to. Report of the Examination for. May, 1892; with copies of the Examination Papers. 1891. Price 1*s.*

Staff College. Final Examination. Report on. December, 1891; with copies of Examination Papers. Price 1*s.*

Militia. Subalterns of. Military Competitive Examination of, for Commissions in the Army. Report on. March, 1892. With copies of the Examination Papers. Price 1*s.*

Foreign Languages. Modern. Examination of Officers of the Army in. October, 1892. Regulations and Specimens of Examination Papers. Price 1*s.*

Officers of Regular Forces, Militia, and Volunteers. Examination held in May, 1892. Report on. Price 1*s.*

School. Army. Regulations. 1889. 8vo. 64 pp. Stitched. Price 4*d.*

Papers of earlier dates can still be had.

ABYSSINIA, EXPEDITION TO. Record of. Compiled by Order of the Secretary of State for War, by Lieut.-Col. TREVENEN J. HOLLAND, C.B., Bombay Staff Corps, and Captain HENRY HOZIER, 3rd Dragoon Guards, In two vols. and case of Maps, cloth, £4 4*s.*; half morocco, £5 5*s.*

Digitized by Google

WORKS prepared in the Intelligence Division of the War Office.

ARMED STRENGTH OF:—

BELGIUM. 1882. Price 2*s.*

DENMARK. By Captain W. S. Cooke, 22nd Regt. 1875. Price 3*s.*

FRANCE. By Major C. J. East, 57th Regt., D.A.Q.M.G. 1877. Price 7*s.* 6*d.*

THE GERMAN EMPIRE. By Captain J. M. Grierson, R.A., and Edited by Colonel C. W. Bowdler Bell, D.A.A.G. 1888. Part I. With Map. Price 6*s.* 6*d.* Part II. Price 2*s.*

JAPAN. By Captain J. M. Grierson, R.A. 1886. Price 2*s.*

THE NETHERLANDS and their COLONIES. With two Maps. By Major J. K. Trotter, R.A. 8vo. 182 pp. Price 7*s.* 6*d.*

PORTUGAL. By Lieutenant Count Gleichen. 1888. Price 3*s.*

ROUMANIA. (With a Map.) By Captain C. E. Callwell, R.A. 1888. Price 1*s.* 6*d.*

RUSSIA. With 2 Maps. Price 18*s.*

SPAIN. With Map. 1883. Price 5*s.*

SWEDEN AND NORWAY. By Captain W. S. Cooke, 22nd Regt., D.A.Q.M.G. With Map. Price 3*s.* 6*d.*

SWITZERLAND. By Colonel C. W. Bowdler Bell, D.A.A.G. With a Map. 1889. Price 7*s.* 6*d.*

AUSTRIA-HUNGARY. Military Forces of. 1891. Price 2*s.*

BALKAN STATES, MINOR. Roumania, Servia, Bulgaria, Montenegro, and Greece. Handbook of the Armies of. By Captain C. E. Callwell, R.A., Staff Captain. (1891.) Price 1*s.* 6*d.*

CAVALRY. Instructions for the Training, Employment, and Leading of. By Major-General Carl Von Schmidt. Compiled by Captain Von Vollard-Bockelberg, 2nd Silesian Dragoons. Translated by Captain C. W. Bowdler Bell, 8th Hussars. 1881. Price 3*s.* 6*d.*

CYPRUS. Compiled by Captain A. R. Saville, 18th Foot. 1878. Price 2*s.* 6*d.*

ENGLISH-ARABIC VOCABULARY AND DIALOGUES FOR THE USE OF THE ARMY AND NAVY. By Captain C. M. Watson, R.E. 82 pp. Cloth. 1885. Price 1*s.*

FRANCO-GERMAN WAR, 1870-71. Authorised Translation from the German Official Account, by Major F. C. H. Clarke, C.M.G., R.A.

First Part:—*History of the War to the Downfall of the Empire.*

Vol. I.:—Sections 1 to 5. From the Outbreak of Hostilities to the Battle of Gravelotte. With case of Maps and Plans. Price 26*s.* (*Out of print.*)

Vol. II.:—Sections 6 to 9. From the Battle of Gravelotte to the Downfall of the Empire. With case of Maps and Plans. Price 22*s.* (*Out of print.*)

Second Part:—*History of the War against the Republic.*

Vol. I. Sects. 10 to 13:—From the Investment of Paris to the re-occupation of Orleans by the Germans, with case of Maps and Plans. Price 26*s.*

Vol. II., Sects. 14 to 18:—Events in Northern France from the end of November. In the North-west from the beginning of December. And the Siege of Paris from the commencement of December to the Armistice; the operations in the South-east from the middle of November to the Middle of January. 1883. Price 26*s.*

Vol. III., Sects. 19 and 20:- Events in South-east France from the middle of January to the Termination of Hostilities. Rearward Communications. The Armistice. Homeward March and Occupation. Retrospect. 1884. Price 31*s.* 6*d.* Analytical Index. By Colonel Lonsdale Hale. Price 1*s.* 6*d.*

Digitized by Google

WORKS prepared in Intelligence Division—continued.

FRANCO-GERMAN WAR, 1870-71—*continued.*

Also separately, in paper covers:—

1st Section:—The Events in July. Price 3*s.*

2nd Section:—Events to the Eve of the Battles of Wörth and Spicheren. Price 3*s.*

3rd Section:—The Battles of Wörth and Spicheren. 1882. Price 5*s.*

4th Section:—Advance of the Third Army to the Moselle, &c. Second Edition, revised and corrected. With 1 Plan and 7 Sketches. Price 4*s.*

5th Section:—Operations near Metz on 15th, 16th, and 17th August. Battle of Vionville Mars-la-Tour. Price 6*s.* 6*d.*

6th Section:—The Battle of Gravelotte—St. Privat. 5*s.* (*Out of print.*)

7th Section:—Advance of Third Army and of the Army of the Meuse against the Army of Chalons. Price 6*s.*

8th Section:—The Battle of Sedan. Price 3*s.* (*Out of print.*)

9th Section:—Proceedings on the German Coast and before the Fortresses in Alsace and Lorraine. General Review of the War up to the commencement of September. Price 4*s.* 6*d.*

10th Section:—Investment of Paris. Capture of Toul and Strassburg. Price 6*s.*

11th Section:—Events before Paris and at other Points of the Theatre of War. Price 5*s.* 3*d.*

12th Section:—Last Engagements with the French Army of the Rhine. 1878. Price 4*s.* 6*d.*

13th Section:—Occurrences on the Theatre of War in Central France up to the re-occupation of Orleans by the Germans. 1880. Price 6*s.*

14th Section:—Measures for the Investment of Paris. Price 4*s.*

15th Section:—Measures for protecting the Investment of Paris. 1880. Price 2*s.* 6*d.*

16th Section:—Proceedings of the Second Army. Price 3*s.* 6*d.*

17th Section:—Proceedings of the First Army. Price 3*s.*

18th Section:—Occurrences on the South-eastern Theatre of War up to the middle of January, 1881. Price 8*s.*

19th Section:—Occurrences on the South-east Theatre of War. Price 13*s.* 6*d.*

20th Section:—General Retrospect of the War. The Results of the War. Price 5*s.*

FRENCH ARMY. HANDBOOK OF THE. 1891. Price 1*s.* 6*d.*

GERMAN INFANTRY. The Musketry Instructions for Translated by Colonel C. W. Bowdler Bell. 1889. Price 2*s.* 6*d.*

GERMANY: Campaign of 1866 in. Compiled by the Department of Military History of the Prussian Staff. Price £1 1*s.*

HOSTILITIES WITHOUT DECLARATION OF WAR. An Historical Abstract of the cases in which Hostilities have occurred between Civilised Powers prior to declaration or warning. From 1700 to 1870. By Bt. Lieut.-Colonel J. F. Maurice, R.M. 1883. Price 2*s.*

ITALIAN ARMY. Handbook of the. Price 1*s.* 6*d.*

RECONNAISSANCE IN LITTLE KNOWN COUNTRIES. Hints on. By Captain C. E. Callwell, R.A., Staff Captain. Price 1*d.*

RUSSIAN ARMY. HANDBOOK OF THE. By Major J. Wolfe Murray, R.A., D.A.A.G. 1889. Price 6*d.*

RUSSIAN TROOPS IN ASIA. HANDBOOK OF THE. By Major J. Wolfe Murray, R.A., D.A.A.G. Price 1*s.* 6*d.*

STAFF DUTIES IN THE FIELD. 1891. Price 3*s.*

STAFF. GENERAL. The Duties of. By Major-General Bronsart von Schellendorf. Translated from the German by Captain W. A. H. Hare, R.E. 1880. 2 vols. Price 15*s.*

SUDAN CAMPAIGN. History of. In Two Parts, with Case of Maps. By Colonel H. E. Colville, C.B., Gren. Guards. 1890. Price 15*s.*

SUDAN, RED SEA, AND EQUATOR. REPORT ON THE EGYPTIAN PROVINCES OF THE. Revised up to July, 1884. Price 3*s.* 6*d.*

SURVEYS (GOVERNMENT) OF THE PRINCIPAL COUNTRIES. NOTES ON. With the Civil and Military Divisions of each Country, Measures of Length and Surface, Lists of Government Maps, Conventional Signs and Abbreviations employed, and useful Tables for Map Reading; to which is added a List of Colonial and extra-Continental Possessions, and a List of Map Agents. 1882. Price 6*s.*

TACTICS. MODERN. A Précis of. Revised and re-written. 1892. Price 4*s.* 6*d.*

TURKISH ARMY. Handbook of the. 1892. Price 4*d.*

VALPARAISO. The Capture of in 1891. Reports on the. Price 1*s.*

WAR GAME. Rules for the Conduct of. 1884 (Reprinted 1889). Price 1*s.*

Digitized by Google

Digitized by Google